Page	Title of schematic page	Rev.	Date
01	Page List	1A	
02	Block Diagram	1A	
03	Change List	1A	
04	HSW MCP(DISPLAY/Sideband)	1A	
05	HSW MCP(MEMORY/GND)	1A	
06	HSW MCP(CFG/PwrMGT)	1A	
07	HSW MCP(POWER)	1A	
08	HSW PCH(RTC/HDA/SATA)	1A	
09	HSW PCH(PCIE/USB)	1A	
10	HSW PCH(CLK/LPC/SPI/SMB)	1A	
11	HSW PCH(GPIO/LPIO/MISC)	1A	
12	HSW PCH(POWER)	1A	
13	DDR3 DIMM0-STD (5.2H)	1A	
14	DDR3 DIMM1-RSV (5.2H)	1A	
15	HOLE/EMI/KB	1A	
16	WPCE985L & FLASH	1A	
17	LVDS/CAMERA	1A	
18	CARD READER(RTS5227E)	1A	
19	HDMI/THERMAL	1A	
20	USB	1A	
21	LAN (RTL8111GS)	1A	
22	WLAN/KB-BL	1A	
23	HDD/ODD/G-SENSOR/TP/FAN	1A	
24	Audio ALC233-CG	1A	
25	LED/PS/DMIC	1A	
26	POWER +VCC_CORE (NCP81101)	1A	
27	POWER 3VPCU&RVCC5(TPS51427)	1A	
28	POWER 1.35VSUS/VTT_MEM	1A	
29	POWER +1.05V(G5602R41U)	1A	
30	POWER VCC1.5/Thermal	1A	
31	POWER(BAT IN / ADA IN/ UL)	1A	
32	POWER CHARGER (ISL88731C)	1A	
33	POWER VGA_CORE/1.0(RT8812A)	1A	
34	POWER VGA_CORE/1.8(RT8812A)	1A	
35	NVIDIA N14 GB2-64 PCIE 1/4	1A	
36	NVIDIA N14 GB2-64 TMDS 2/4	1A	
37	NVIDIA N14 GB2-64 VRAM 3/4	1A	
38	NVIDIA N14 GB2-64 VRAM 4/4	1A	
39	AUDIO Woofer	1A	

Page	Title of schematic page	Rev.	Date
40	IO PORT LIST	1A	
		1A	
		1A	
		1A	

* : No mount
L@ : For LVDS output
D@ : For eDP output
E@ : For DIS GFX
I@ : For UMA

1

HKC Haswell ULT BLOCK DIAGRAM

02

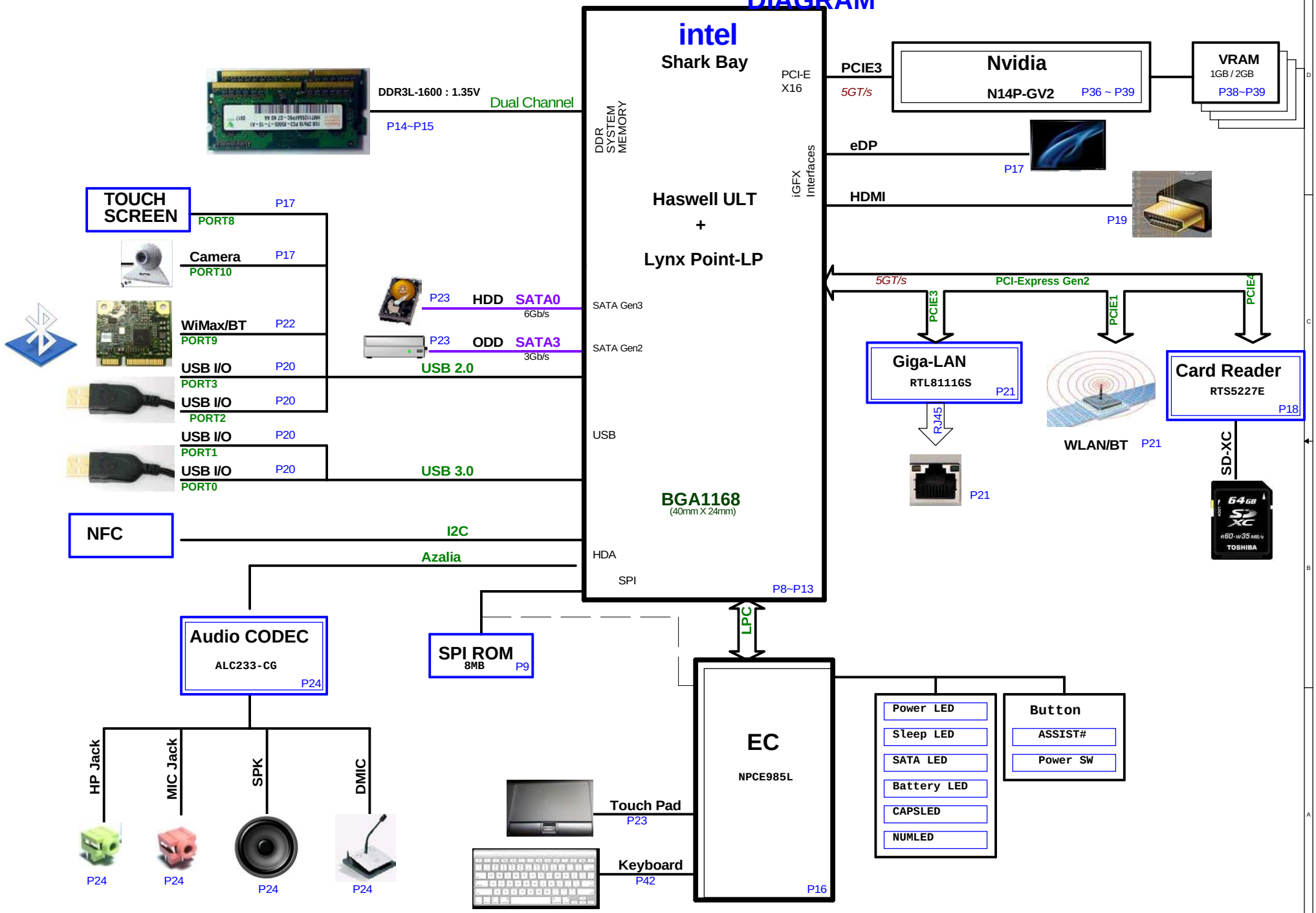

WWW.AliSaler.Com

Haswell ULT (DISPLAY)

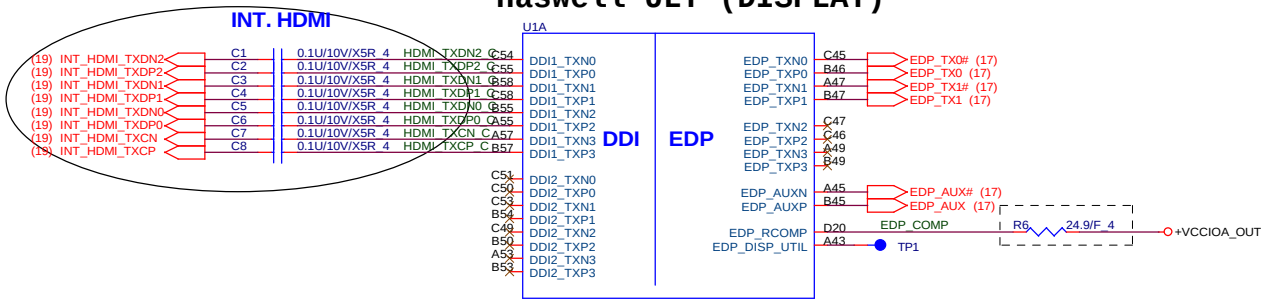

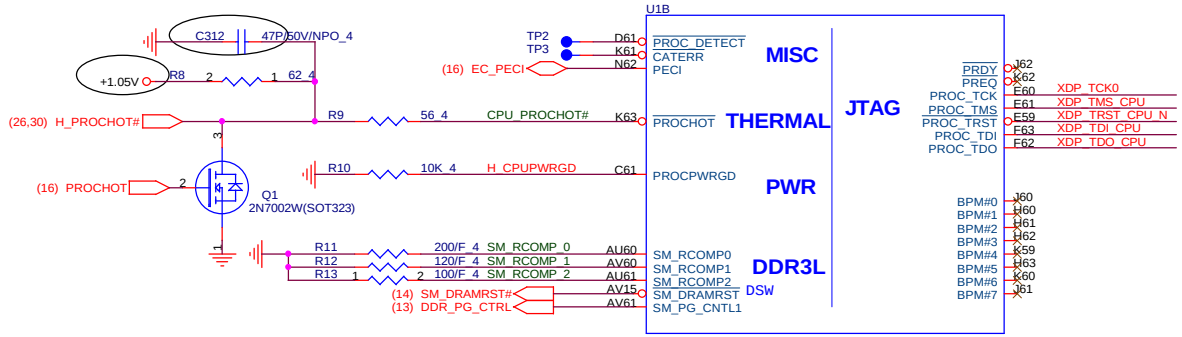

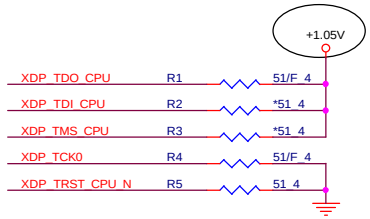

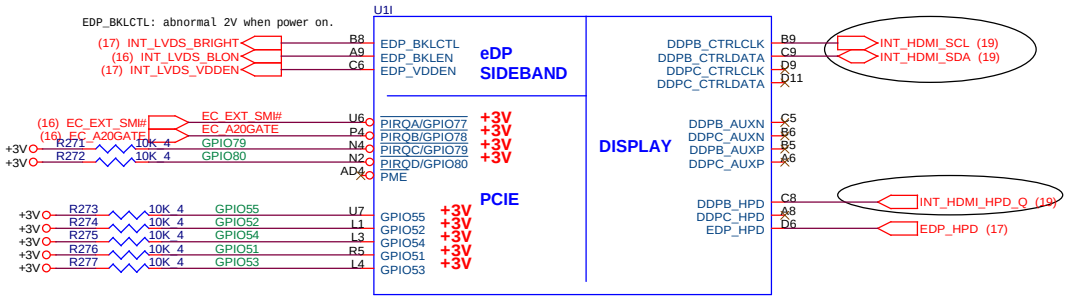

1.Level 1 Environment-related Substances Should Never be Used.
2.Recycled Resin and Coated Wire should be procured from Green Partners.

Quanta Computer Inc.

PROJECT : HKC

Size	Document Number	Rev
	HSW MCP(Display/eDP)	1A

Date: Thursday, January 31, 2013 Sheet 4 of 40

WWW.AliSaler.Com

Haswell ULT (DDR3L)

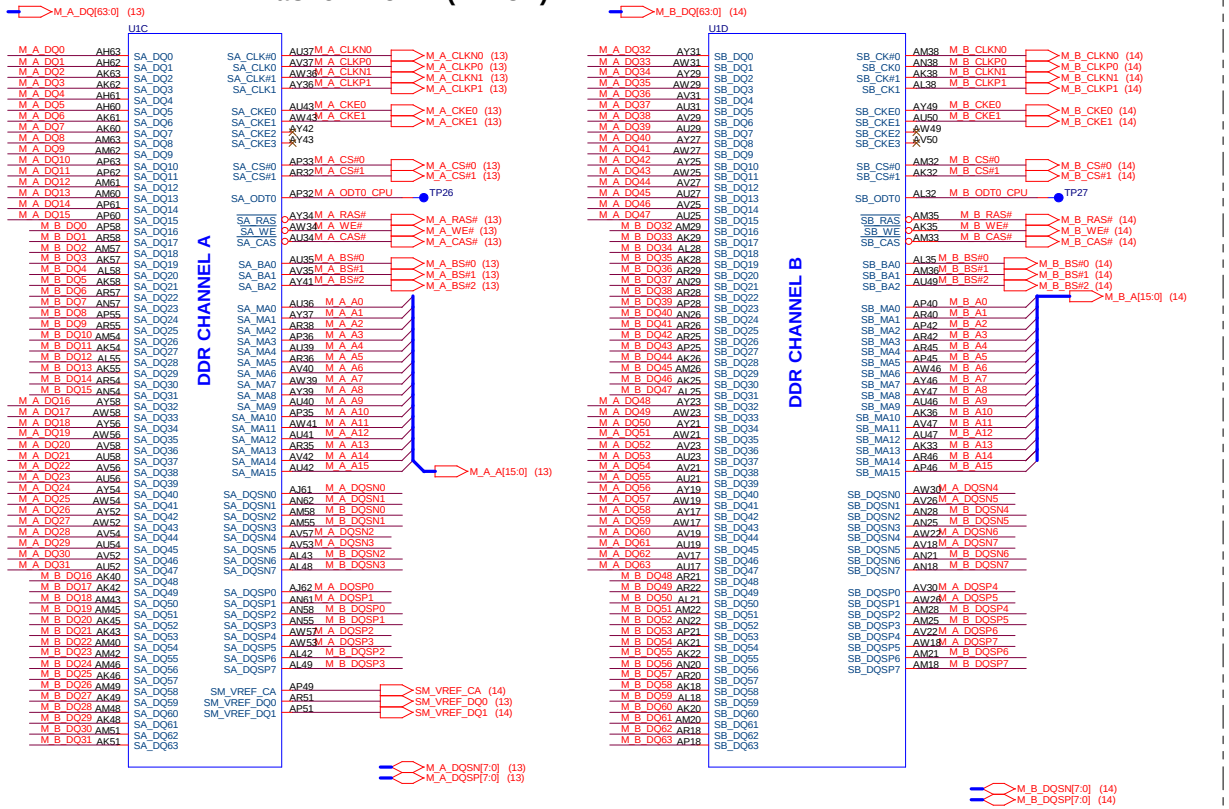

HSW ULT(GND)

5

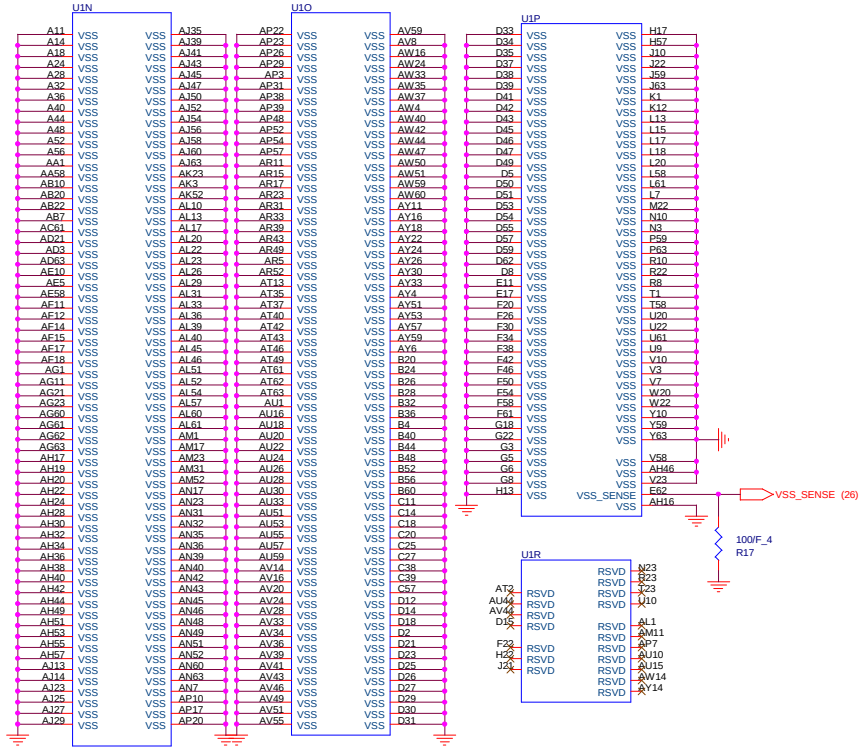

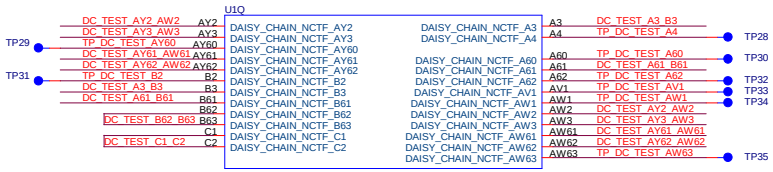

1.Level 1 Environment-related Substances Should Never be Used.
2.Recycled Resin and Coated Wire should be procured from Green Partners.

Quanta Computer Inc.

PROJECT : HKC

Size	Document Number	Rev
	HSW MCP(Memory)	1A

Date: Thursday, January 31, 2013 Sheet 5 of 40

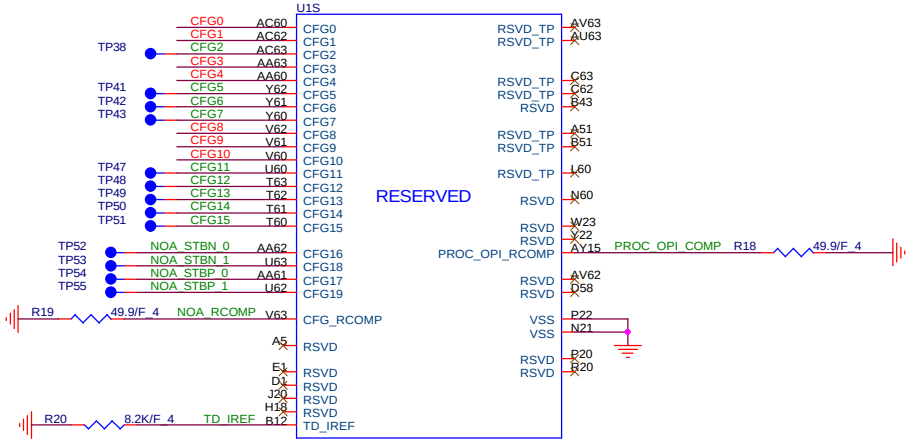

Processor Strapping

	1	0	
CFG0 EAR-STALL/NOT STALL RESET SEQUENCE AFTER PCU PLL IS LOCKED	(DEFAULT) NORMAL OPERATION; NO STALL	STALL	CFG0 R21 *1K_4
CFG1 PCH/ PCH LESS MODE SELECTION	(DEFAULT) NORMAL OPERATION	PCH-LESS MODE	CFG1 R22 *1K_4
CFG3 PHYSICAL_DEBUG_ENABLED (DFX PRIVACY)	DISABLED	ENABLED SET DFX ENABLED BIT IN DEBUG INTERFACE MSR	CFG3 R23 *1K_4
CFG4 DISPLAY PORT PRESENCE STRAP	DISABLED NO PHYSICAL DISPLAY PORT ATTACHED TO EMBEDDED DISPLAY PORT	ENABLED; NOA WILL BE AVAILABLE REGARDLESS OF THE LOCKING OF THE UNIT	CFG4 R24 1K_4
CFG 8 ALLOW THE USE OF NOA ON LOCKED UNITS	DISABLED(DEFAULT); IN THIS CASE, NOA WILL BE DISABLED IN LOCKED UNITS AND ENABLED IN UN-LOCKED UNITS	ENABLED AN EXTERNAL DISPLAY PORT DEVICE IS CONNECTED TO THE EMBEDDED DISPLAY PORT	CFG8 R25 *1K_4
CFG9 NO SVID PROTOCOL CAPABLE VR CONNECTED	VRS SUPPORTING SVID PROTOCOL ARE PRESENT	NO VR SUPPORTING SVID IS PRESENT. THE CHIP WILL NOT GENERATE (OR RESPOND TO) SVID ACTIVITY	CFG9 R26 *1K_4
CFG10 SAFE MODE BOOT	POWER FEATURES ACTIVATED DURING RESET	POWER FEATURES (ESPECIALLY CLOCK GATINE ARE NOT ACTIVATED	CFG10 R27 *1K_4

1.Level 1 Environment-related Substances Should Never be Used.
2.Recycled Resin and Coated Wire should be procured from Green Partners.

Quanta Computer Inc.
PROJECT : HKC

Size	Document Number	Rev
	HSW MCP(CFG)	1A

Date: Thursday, January 31, 2013 Sheet 6 of 40

WWW.AliSaler.Com

Haswell ULT MCP(POWER)

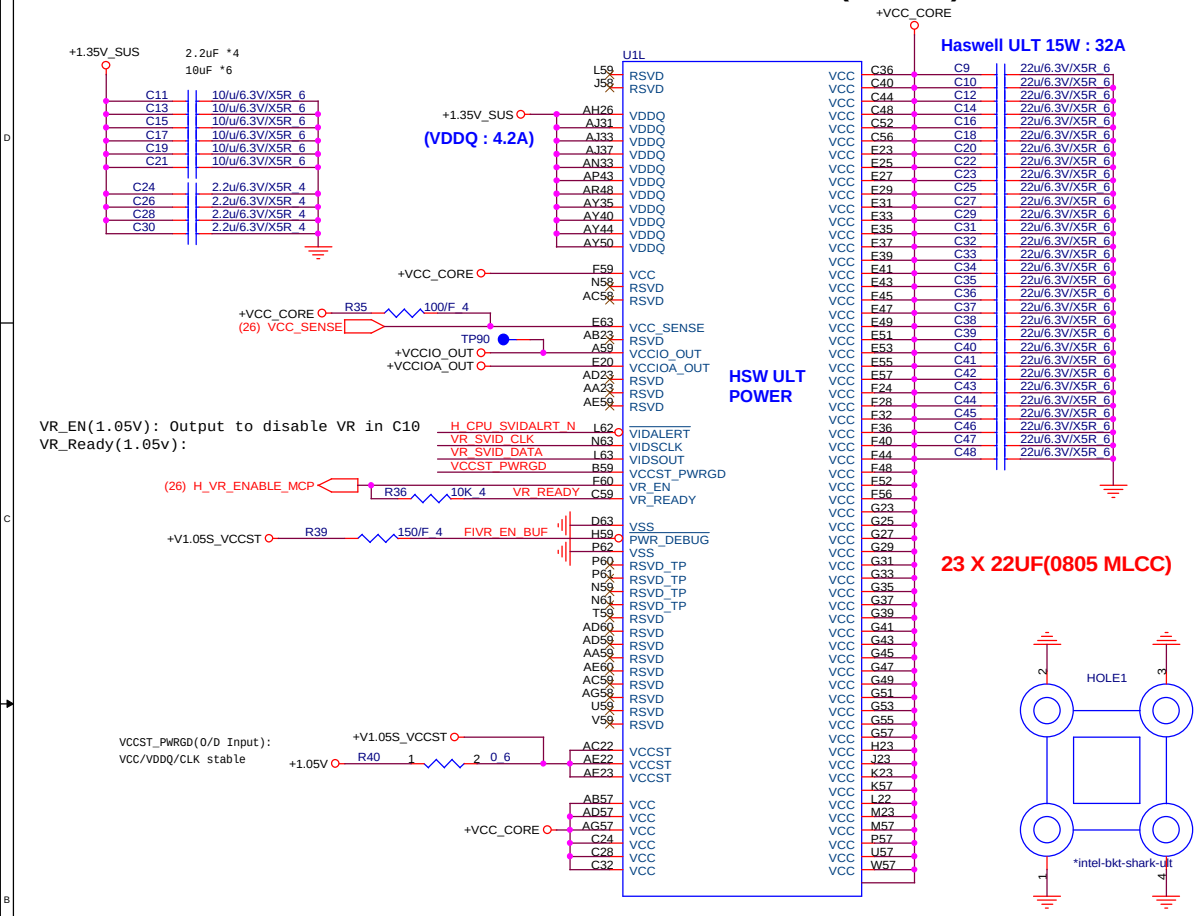

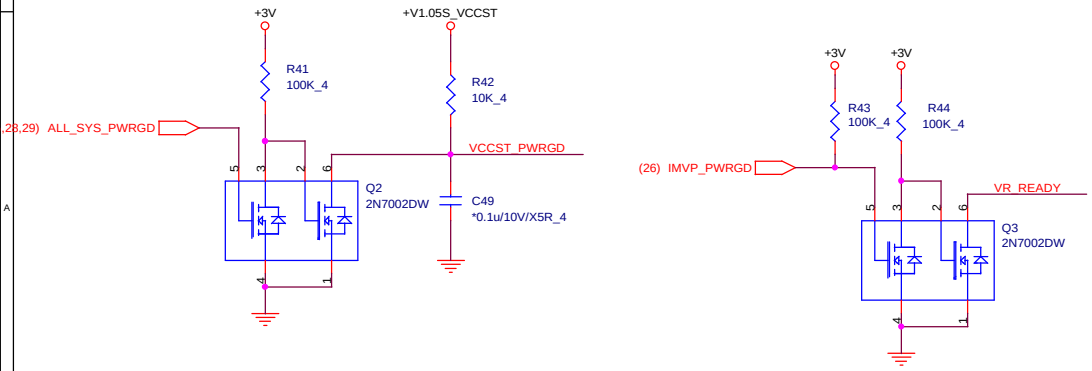

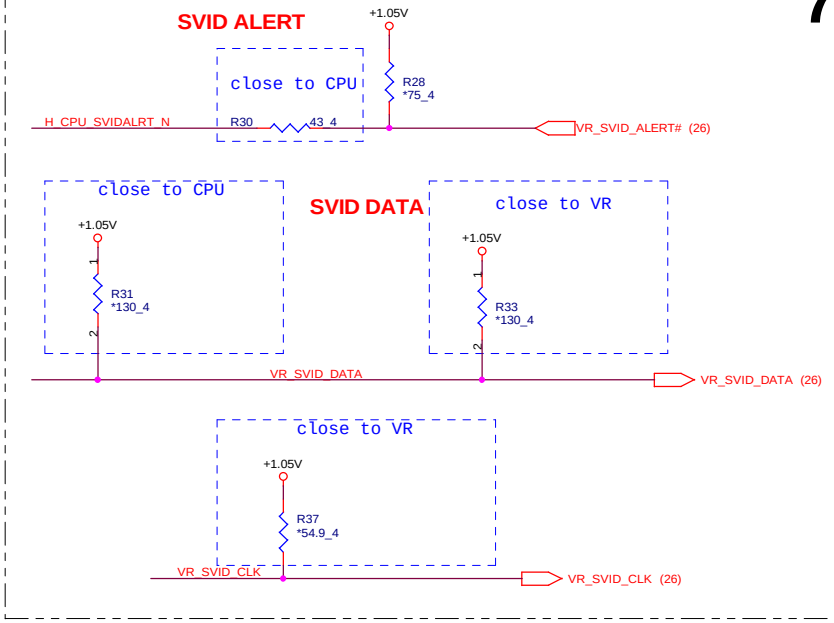

1.Level 1 Environment-related Substances Should Never be Used.
2.Recycled Resin and Coated Wire should be procured from Green Partners.

Quanta Computer Inc.
PROJECT : HKC

Size	Document Number	Rev
	HSW MCP(Power)	1A

Date: Thursday, January 31, 2013 Sheet 7 of 40

Haswell ULT (RTC, HDA, JTAG, SATA)

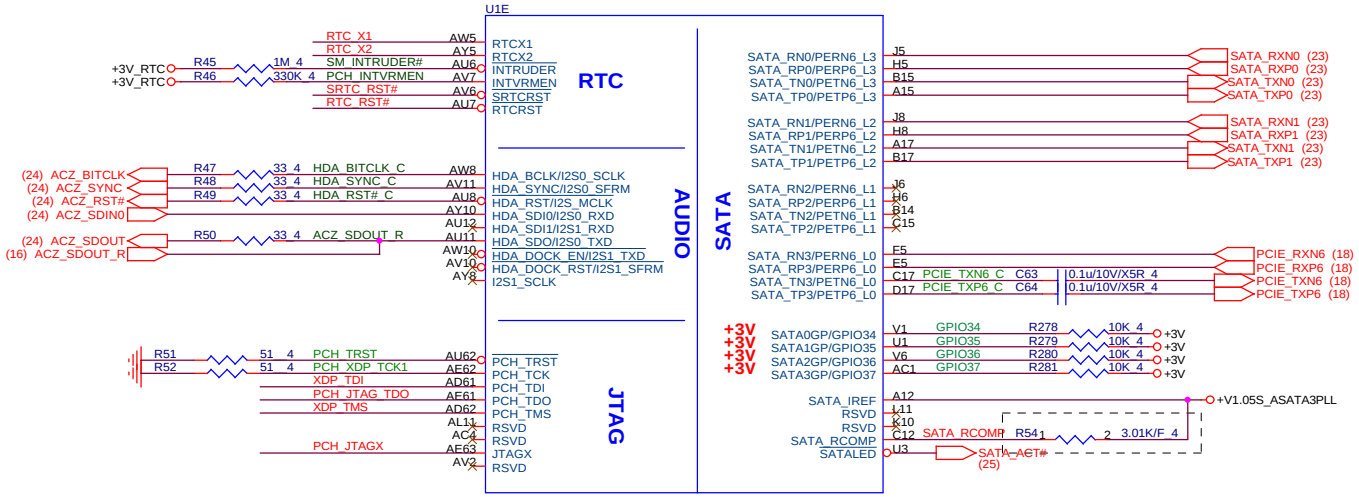

HDD

ODD

Card Reader

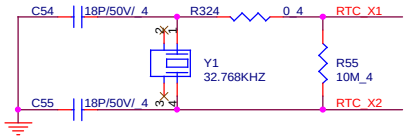

PCH JTAG Debug (CLG)

MP remove(Intel)

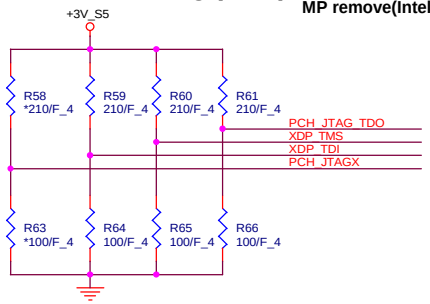

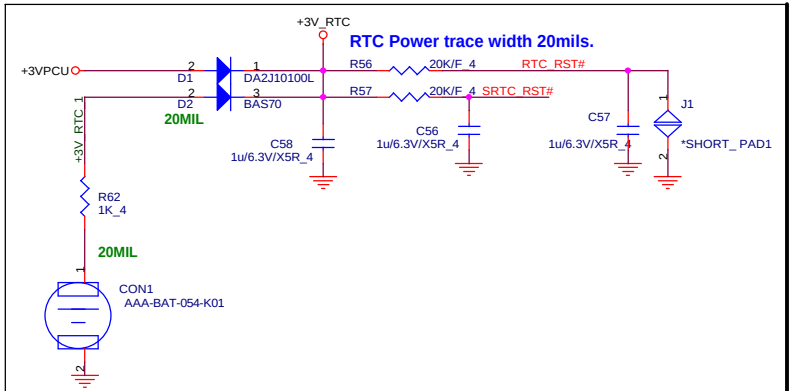

PCH Strap Table

Pin Name	Strap description	Sampled	Configuration	note
SPKR	No reboot mode setting	PWROK	0 = Default (weak pull-down 20K) 1 = Setting to No-Reboot mode	+3V R67 *1K_4 SPKR (11,24)
HDA_SDO	Flash Descriptor Security Override / Intel ME Debug Mode	PWROK	0 = Security Effect (Int PD) 1 = Can be Override	
INTVRMEN	Integrated 1.05V VRM enable	ALWAYS	Should be always pull-up	

1.Level 1 Environment-related Substances Should Never be Used.
2.Recycled Resin and Coated Wire should be procured from Green Partners.

Quanta Computer Inc.
PROJECT : HKC

Size	Document Number	Rev
	HSW PCH(RTC/HDA/SATA)	1A

Date: Friday, February 01, 2013 Sheet 8 of 40

WWW.AliSaler.Com

Haswell ULT (PCIE,USB)

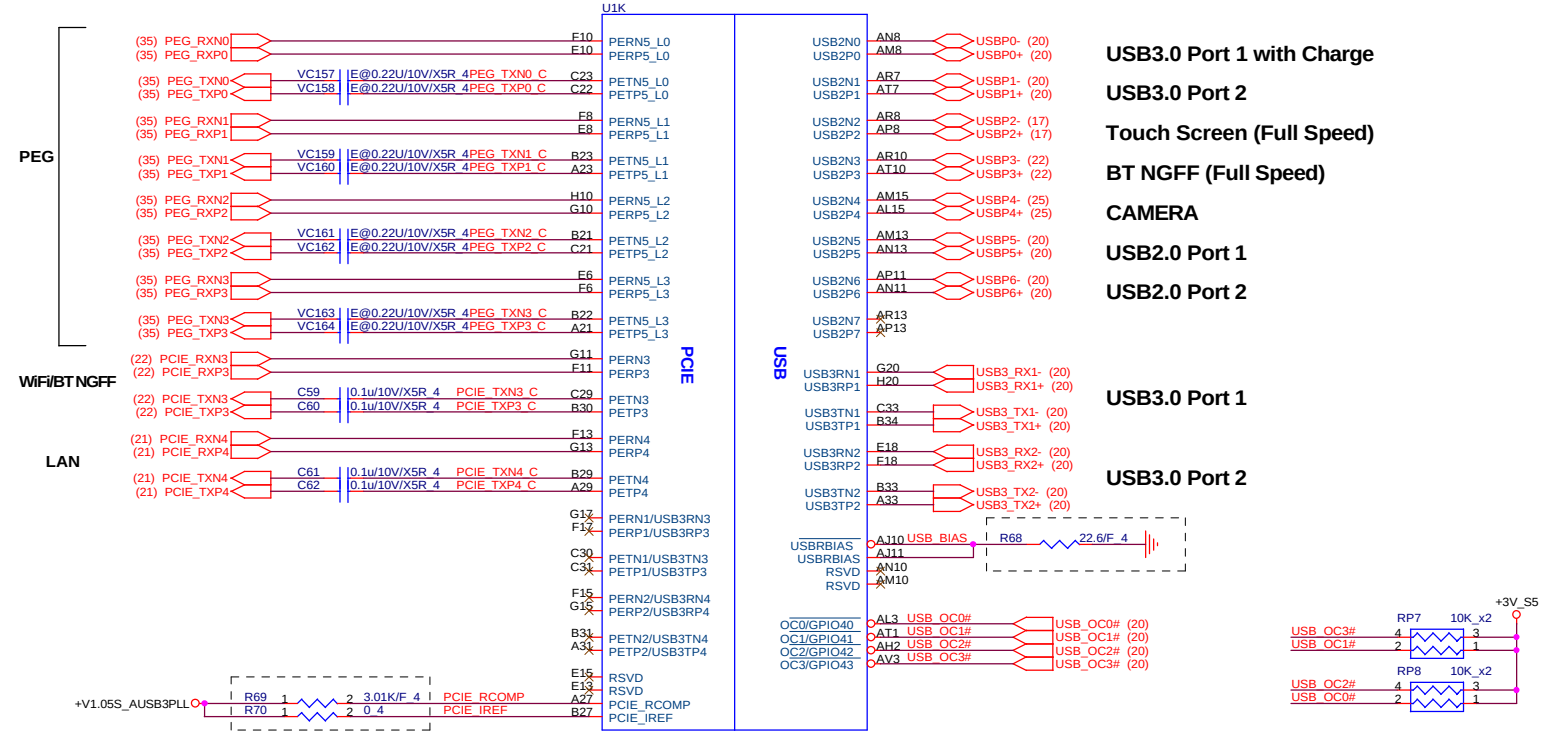

Haswell ULT (SYSTEM POWER MANAGEMENT)

On Die DSW VR Enable

High = Enable (Default)

Low = Disable

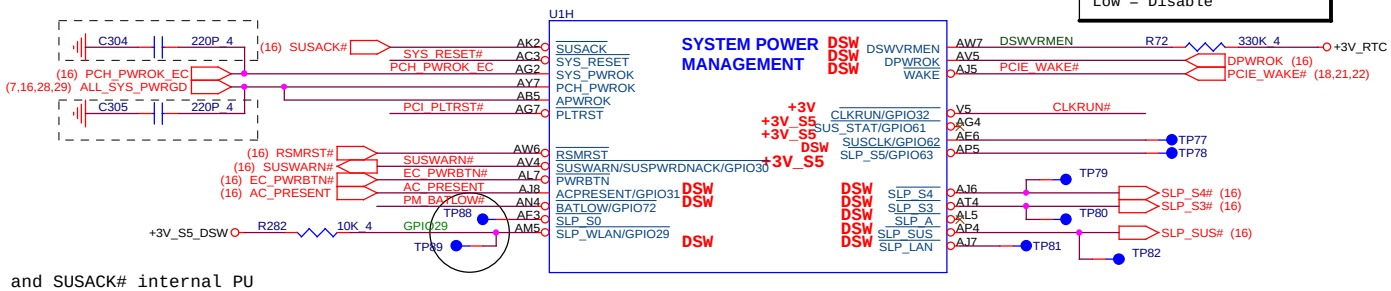

PWRBTN# and SUSACK# internal PU

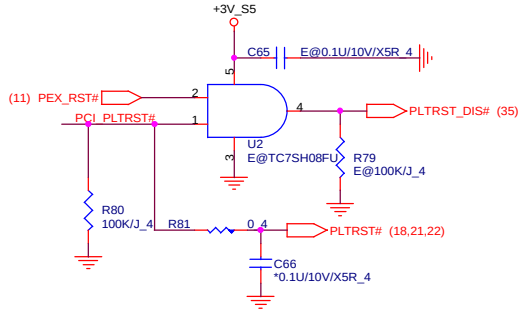

PCH Pull-high/low(CLG)

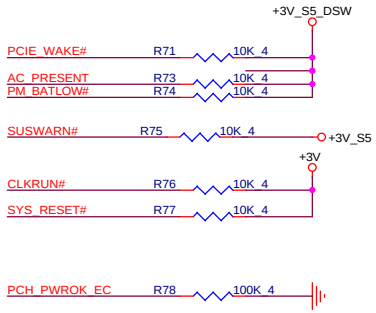

1.Level 1 Environment-related Substances Should Never be Used.
2.Recycled Resin and Coated Wire should be procured from Green Partners.

Quanta Computer Inc.

PROJECT : HKC

Size	Document Number	Rev
	HSW PCH(PCIE/USB)	1A

Date: Thursday, January 31, 2013 Sheet 9 of 40

Haswell ULT (CLK)

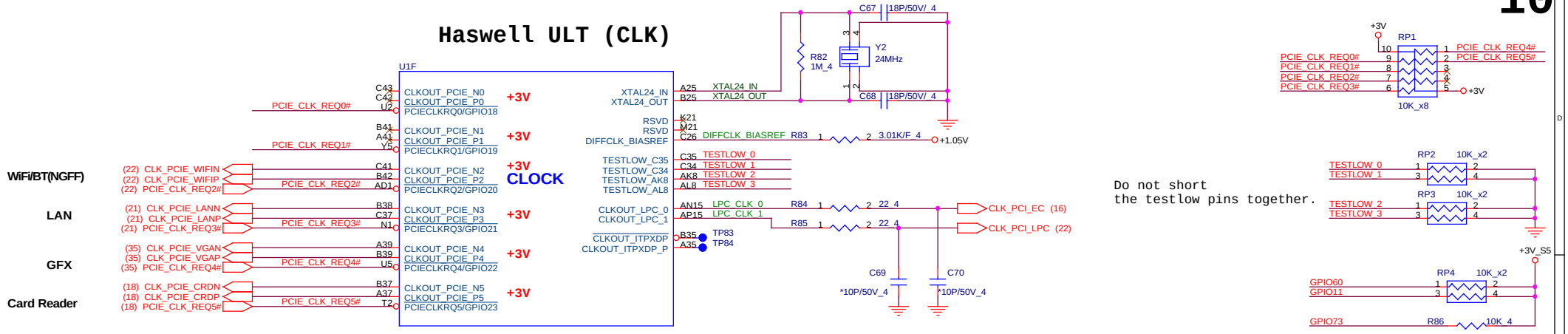

Do not short
the testlow pins together.

Haswell ULT (LPC/SPI/SMB/CLINK)

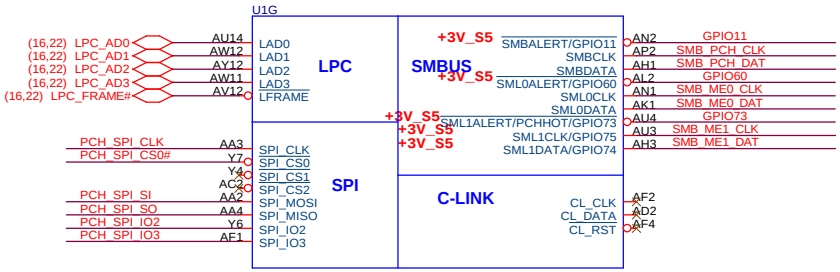

SMBus/Pull-up(CLG)

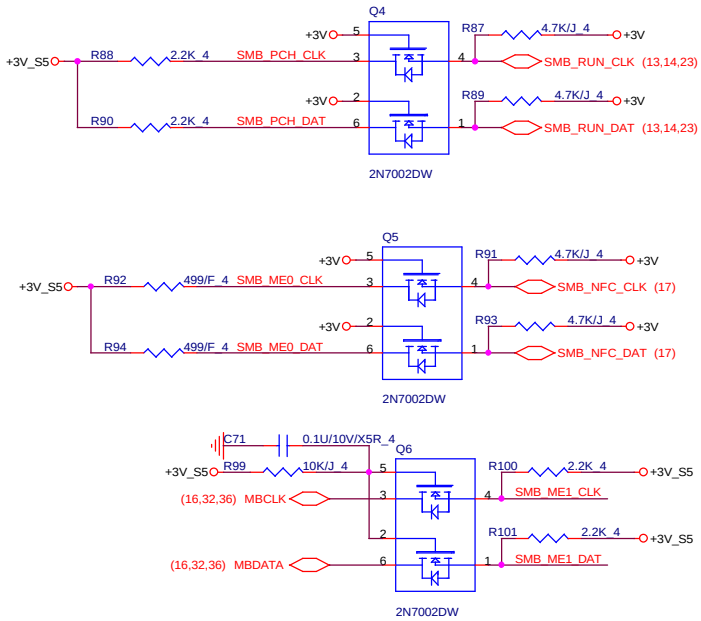

SPI FLASH

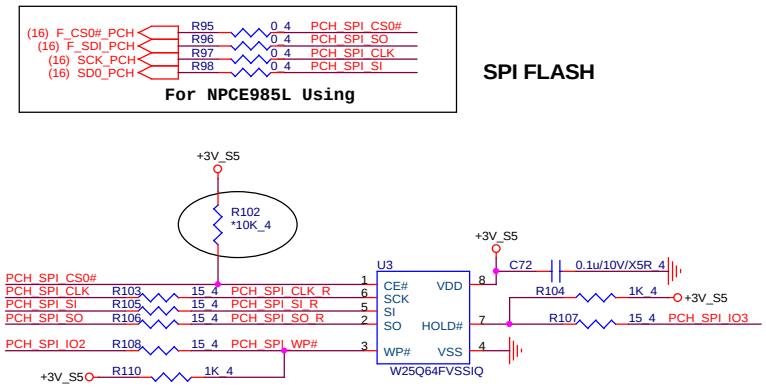

1.Level 1 Environment-related Substances Should Never be Used.
2.Recycled Resin and Coated Wire should be procured from Green Partners.

Quanta Computer Inc.
PROJECT : HKC

Size	Document Number	Rev
	HSW PCH(CLK/LPC/SPI/SMB)	1A
Date: Thursday, January 31, 2013	Sheet 10 of 40	

WWW.AliSaler.Com

Hasswell ULT(GPIO,LPIO,MISC)

GPIO27
With Intel LAN:
Connect to LANWAKE# pin on the LAN
Without Intel LAN:
Used to wake event from DSx

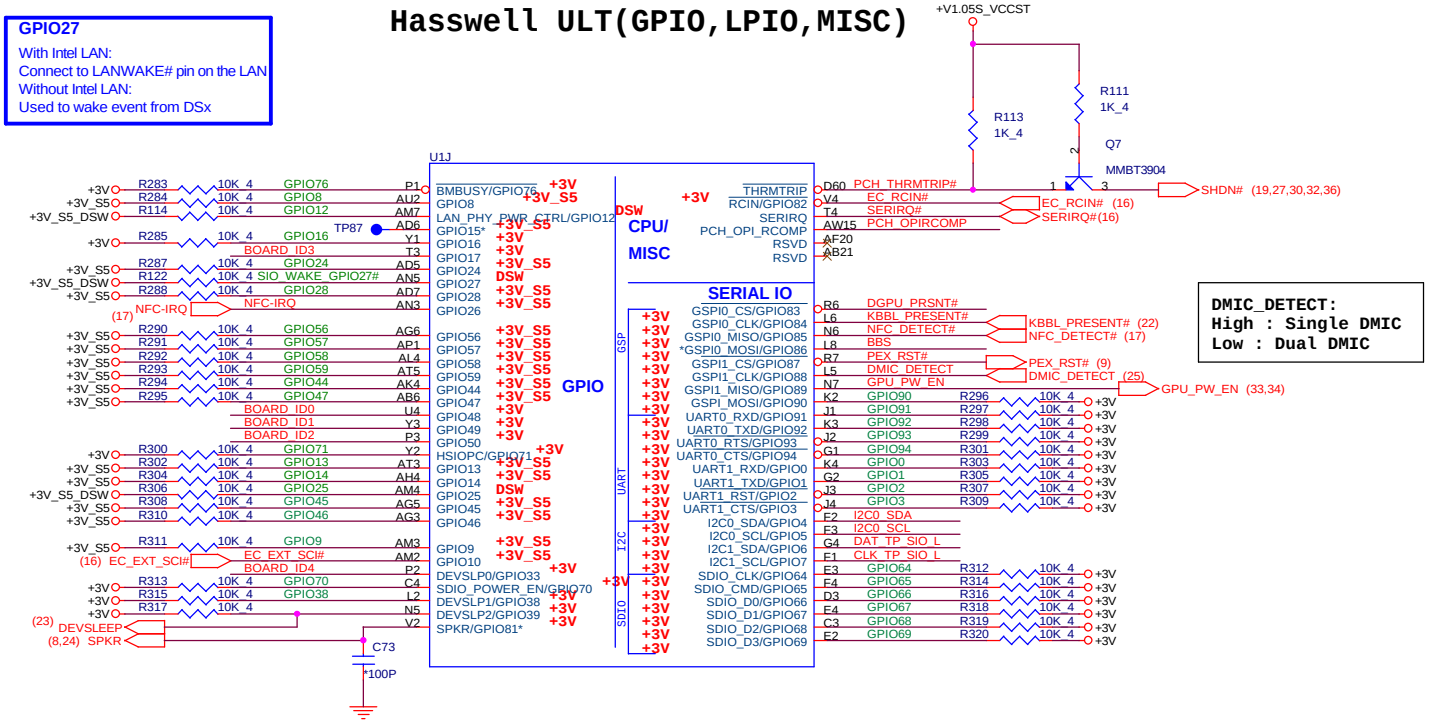

DMIC_DETECT:
High : Single DMIC
Low : Dual DMIC

GPIO Pull-up/Pull-down(CLG)

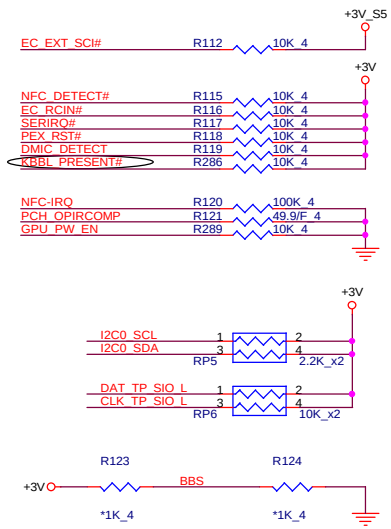

GPIO86	
PU	LPC
PD	SPI (Default IPD)

No Reboot Strap(GPIO81)	
NC	Default
PU	EN

TLS CONFIDENTIALITY STRAP(GPIO15)	
NC	Default
PU	EN

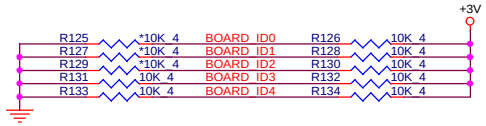

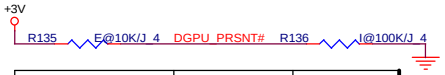

	0	1
Board ID0	CaspiSHA1-CaspiSHB1 HKC/HKD	SuperiorSHA1-SuperiorSHB1 GD9/GDA
Board ID1	HKC1/GD9 14"	HKD-GDA 15"

PCBA SKU	Discrete	UMA
R277(Pull High)	Stuff	No Stuff
R275(Pull Low)	No Stuff	Stuff

1.Level 1 Environment-related Substances Should Never be Used.
2.Recycled Resin and Coated Wire should be procured from Green Partners.

Quanta Computer Inc.
PROJECT : HKC

Size	Document Number	Rev
	HSW PCH(GPIO/MISC)	1A

Date: Thursday, January 31, 2013 Sheet 11 of 40

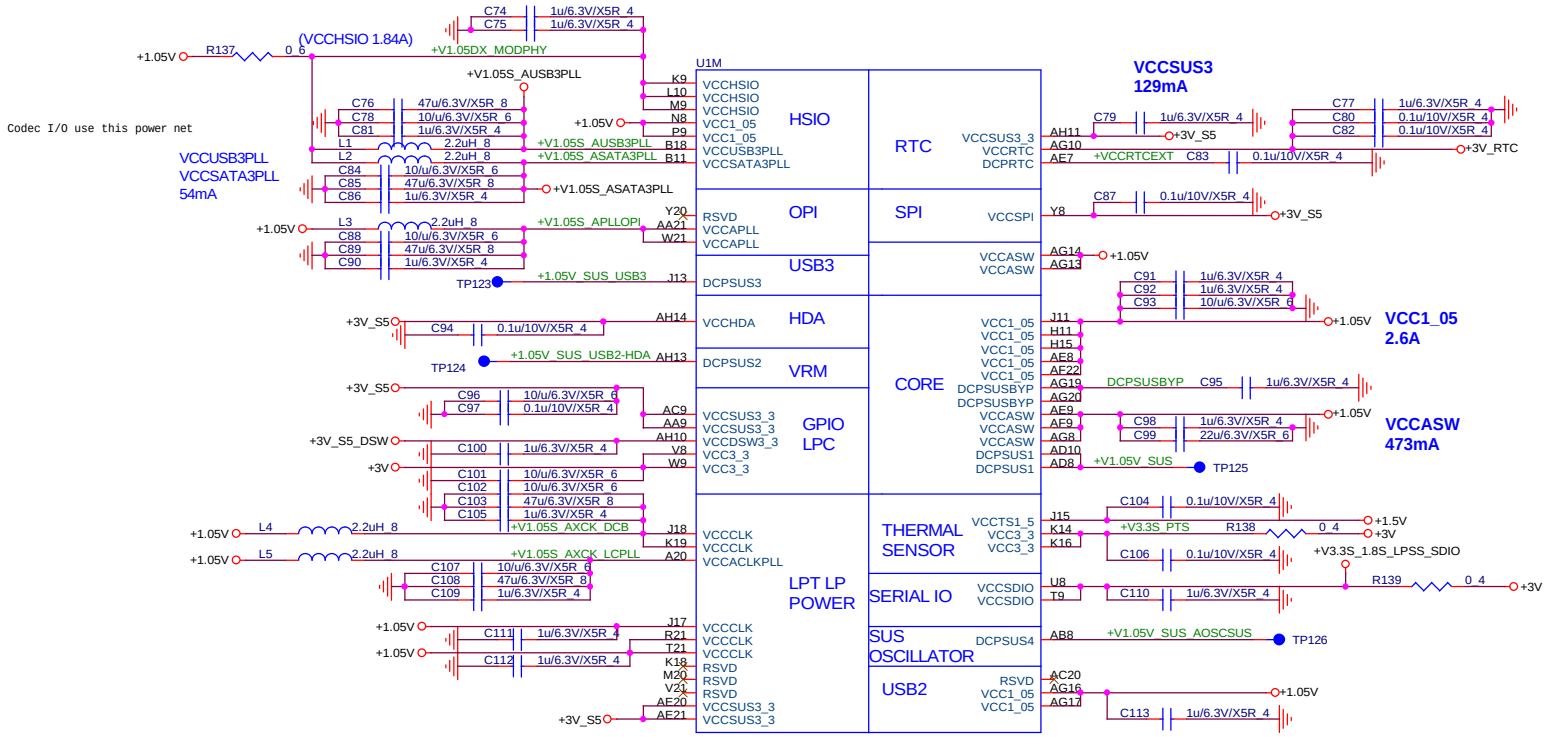

DEEP STANDBY

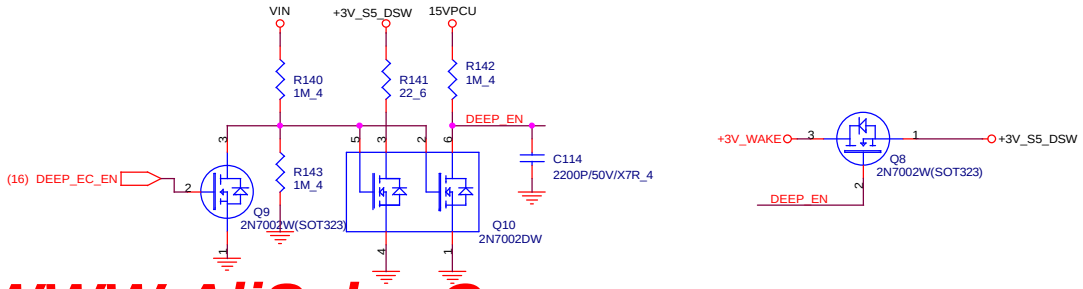

1.Level 1 Environment-related Substances Should Never be Used.
2.Recycled Resin and Coated Wire should be procured from Green Partners.

Quanta Computer Inc.		
PROJECT : HKC		
Size	Document Number: HSW PCH(Power)	Rev 1A
Date: Thursday, January 31, 2013	Sheet 12 of 40	

WWW.AliSaler.Com

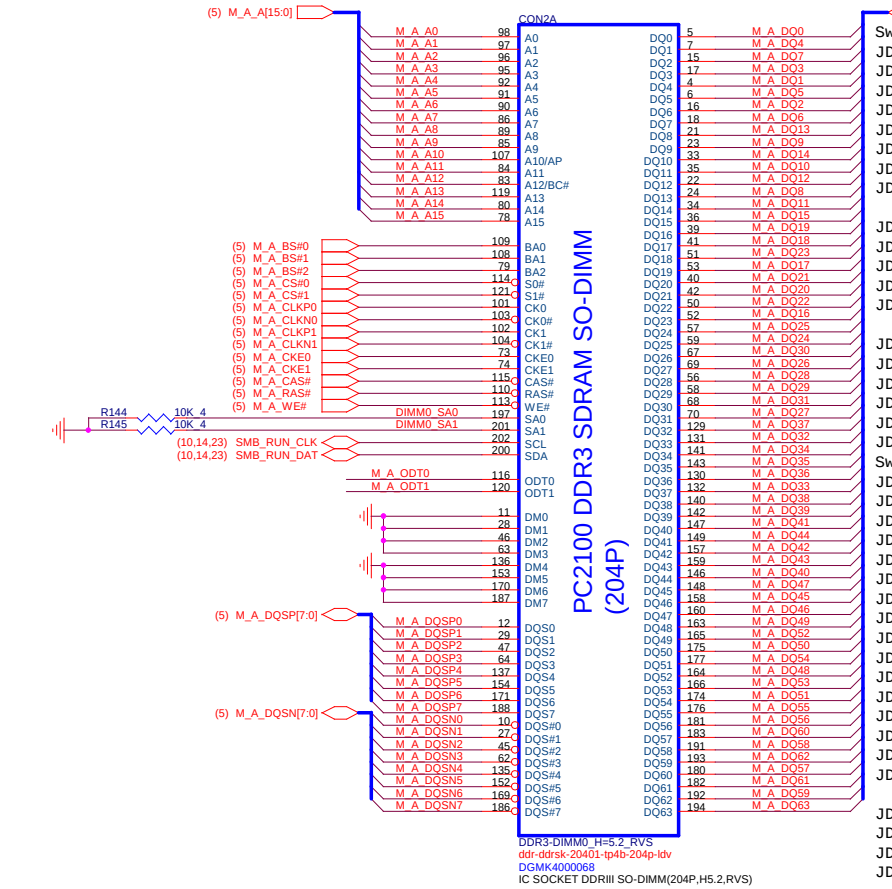

Swap
JDIM1.39M_A_DQ21M_A_DQ19
JDIM1.40M_A_DQ20M_A_DQ21
JDIM1.41M_A_DQ17M_A_DQ18
JDIM1.42M_A_DQ16M_A_DQ20
JDIM1.50M_A_DQ23M_A_DQ22
JDIM1.51M_A_DQ19M_A_DQ23
JDIM1.52M_A_DQ22M_A_DQ16
JDIM1.53M_A_DQ18M_A_DQ17

JDIM1.129M_A_DQ36M_A_DQ37
JDIM1.130M_A_DQ32M_A_DQ36
JDIM1.131M_A_DQ37M_A_DQ32
JDIM1.140M_A_DQ35M_A_DQ38
JDIM1.143M_A_DQ38M_A_DQ35

JDIM1.148M_A_DQ44M_A_DQ47
JDIM1.149M_A_DQ45M_A_DQ44
JDIM1.157M_A_DQ47M_A_DQ42
JDIM1.158M_A_DQ42M_A_DQ45
JDIM1.159M_A_DQ46M_A_DQ43
JDIM1.160M_A_DQ43M_A_DQ46
Swap
JDIM1.163M_A_DQ49M_A_DQ62
JDIM1.164M_A_DQ53M_A_DQ61
JDIM1.165M_A_DQ48M_A_DQ63
JDIM1.166M_A_DQ52M_A_DQ59
JDIM1.174M_A_DQ55M_A_DQ60
JDIM1.175M_A_DQ54M_A_DQ57
JDIM1.176M_A_DQ51M_A_DQ58
JDIM1.177M_A_DQ50M_A_DQ56
JDIM1.180M_A_DQ56M_A_DQ52
JDIM1.181M_A_DQ61M_A_DQ51
JDIM1.182M_A_DQ57M_A_DQ50
JDIM1.183M_A_DQ60M_A_DQ53
JDIM1.191M_A_DQ59M_A_DQ48
JDIM1.192M_A_DQ62M_A_DQ49
JDIM1.193M_A_DQ63M_A_DQ54
JDIM1.194M_A_DQ58M_A_DQ55

JDIM1.169M_A_DQSN6M_A_DQSN7
JDIM1.171M_A_DQSP6M_A_DQSP7
JDIM1.186M_A_DQSN7M_A_DQSN6
JDIM1.188M_A_DQSP7M_A_DQSP6

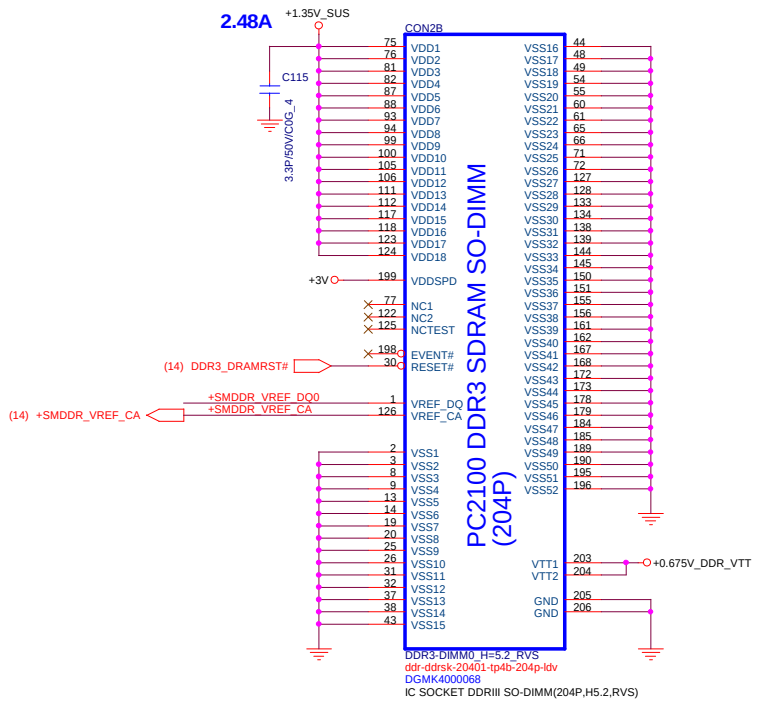

DDR3L SODIMM ODT GENERATION

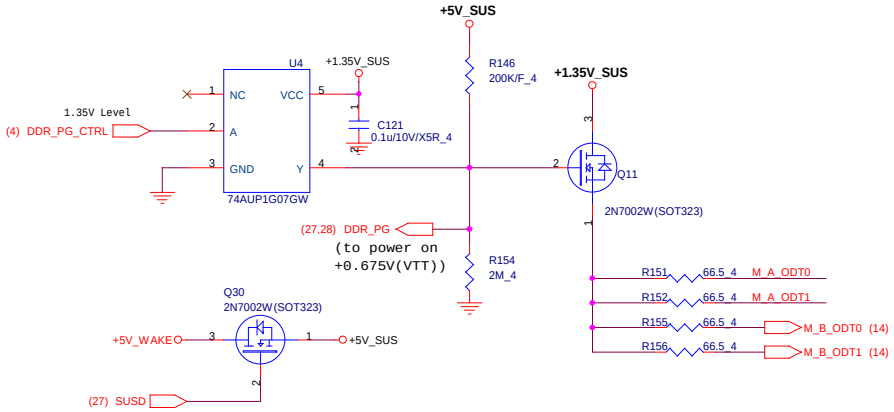

1.Level 1 Environment-related Substances Should Never be Used.
2.Recycled Resin and Coated Wire should be procured from Green Partners.

Place these Caps near So-Dimm0.

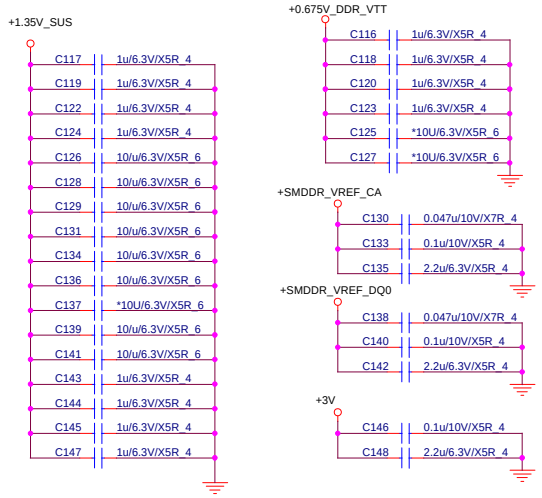

VREF DQ0 M1/M3 Solution

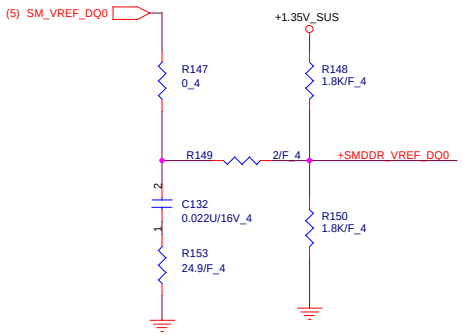

Quanta Computer Inc.
PROJECT : HKC

Size	Document Number	Rev
	DDR3 DIMM0	1A

Date: Thursday, January 24, 2013 Sheet 13 of 40

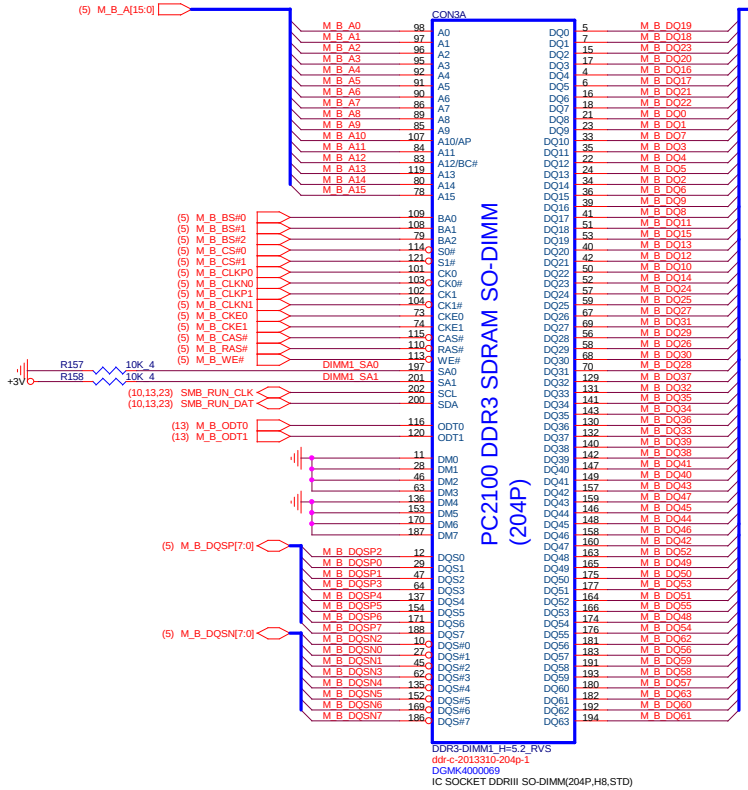

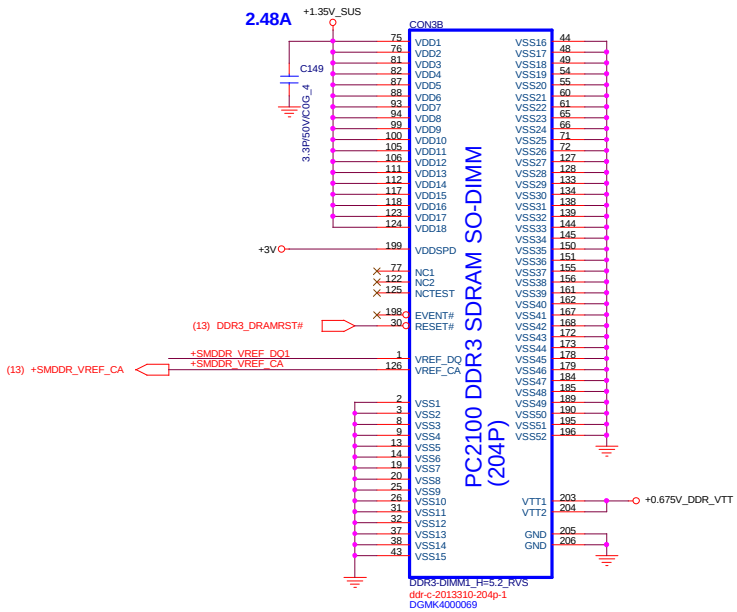

Haswell ULT DRAMRST#

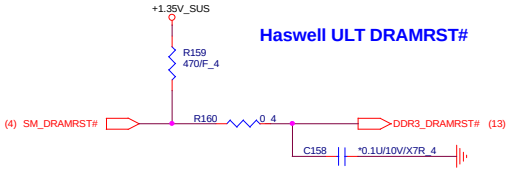

Place these Caps near So-Dimm1

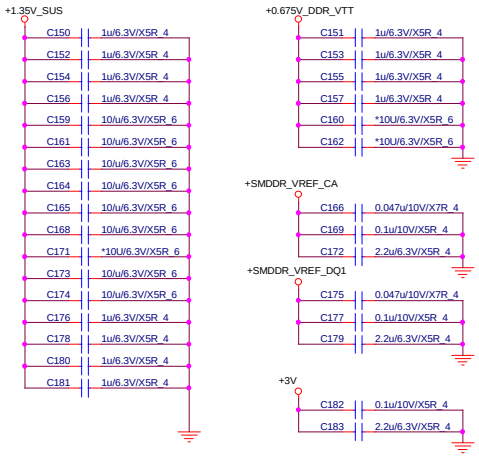

VREF DQ1 Solution

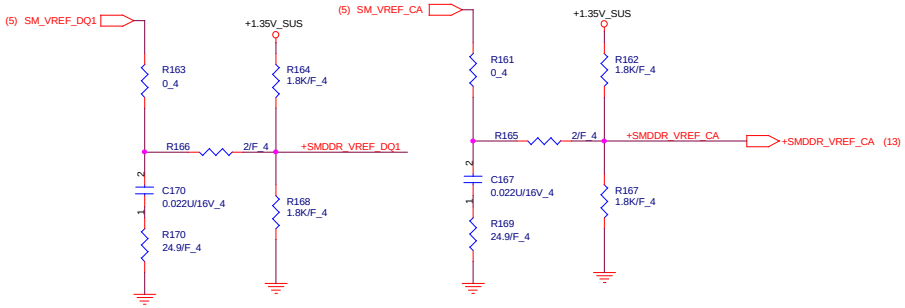

1.Level 1 Environment-related Substances Should Never be Used.
2.Recycled Resin and Coated Wire should be procured from Green Partners.

Quanta Computer Inc.
PROJECT : HKC

Size	Document Number	Rev
	DDR3 DIMM1	1A

Date: Thursday, January 24, 2013 Sheet 14 of 40

WWW.AliSaler.Com

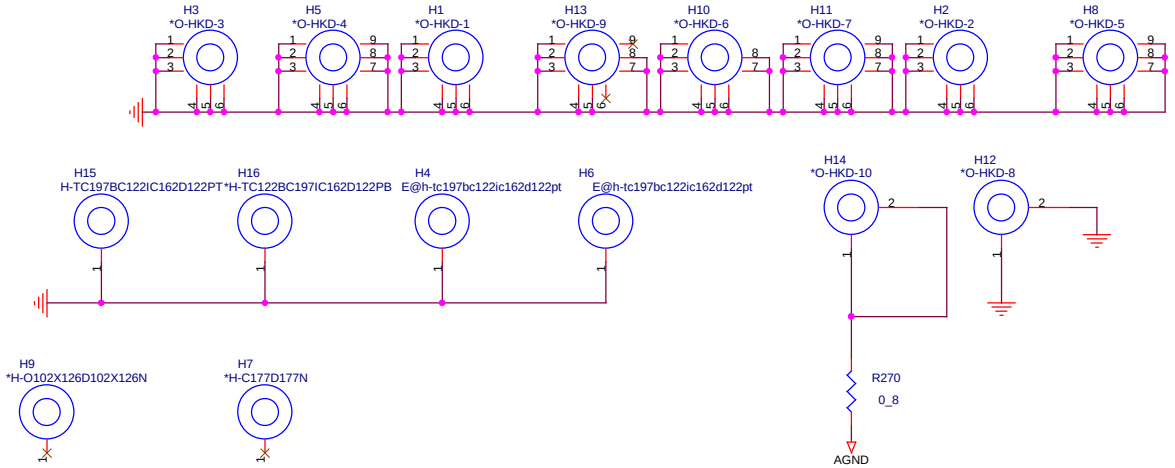

KEY BOARD Connector

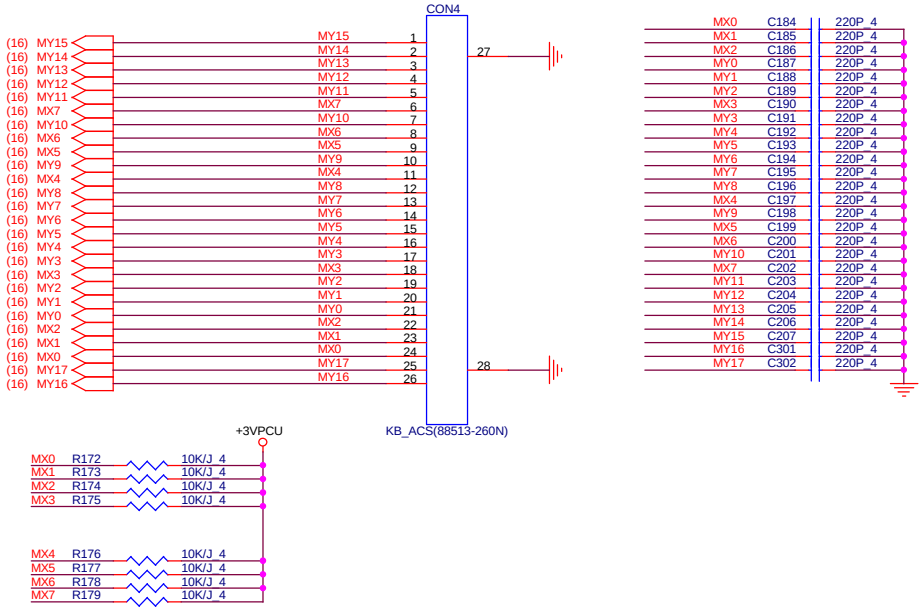

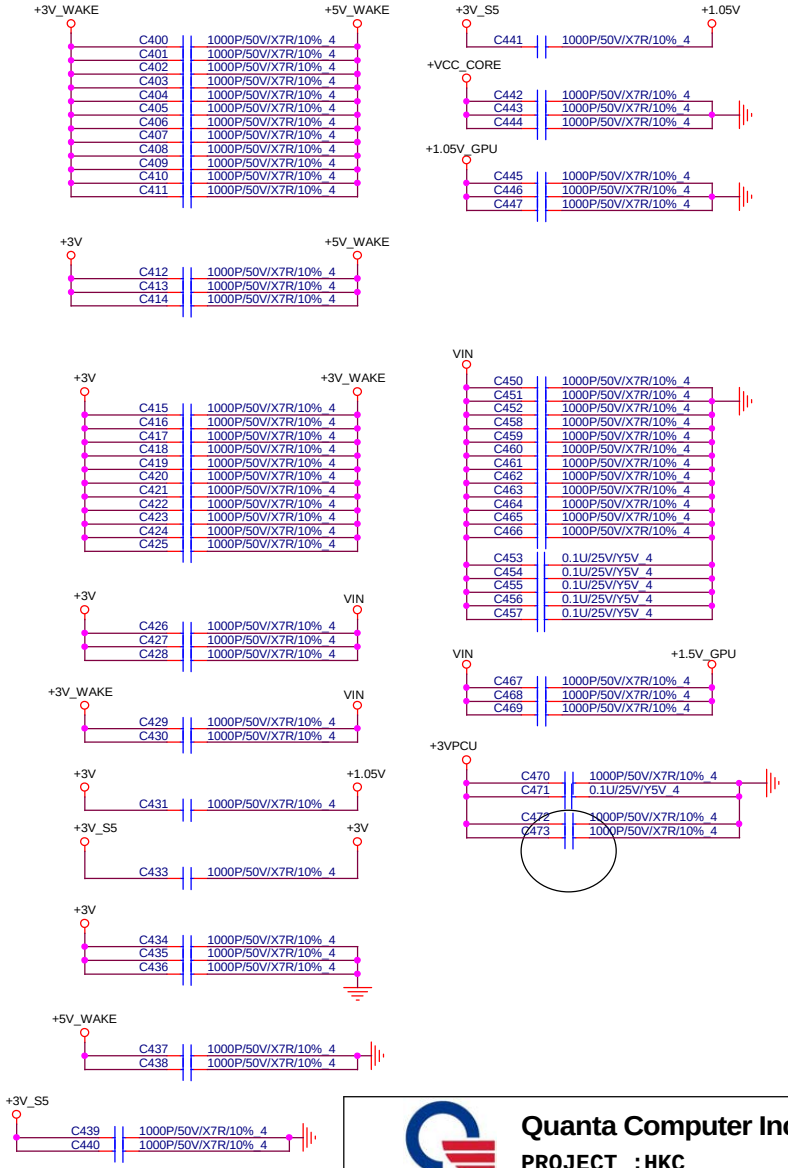

1.Level 1 Environment-related Substances Should Never be Used.
2.Recycled Resin and Coated Wire should be procured from Green Partners.

Quanta Computer Inc.

PROJECT :HKC

Size	Document Number	Rev
	HOLE/EMI/KB	1A

Date: Tuesday, February 05, 2013 Sheet 15 of 40

New ADD

**** Straping Pin,Can not pull low.**
Note the input leakage current to the strap pins must be less than 10uA.

Since ECSCI is OD, no need for a back-drive protection diode on this signal. But note there is internal PU in chipset at default

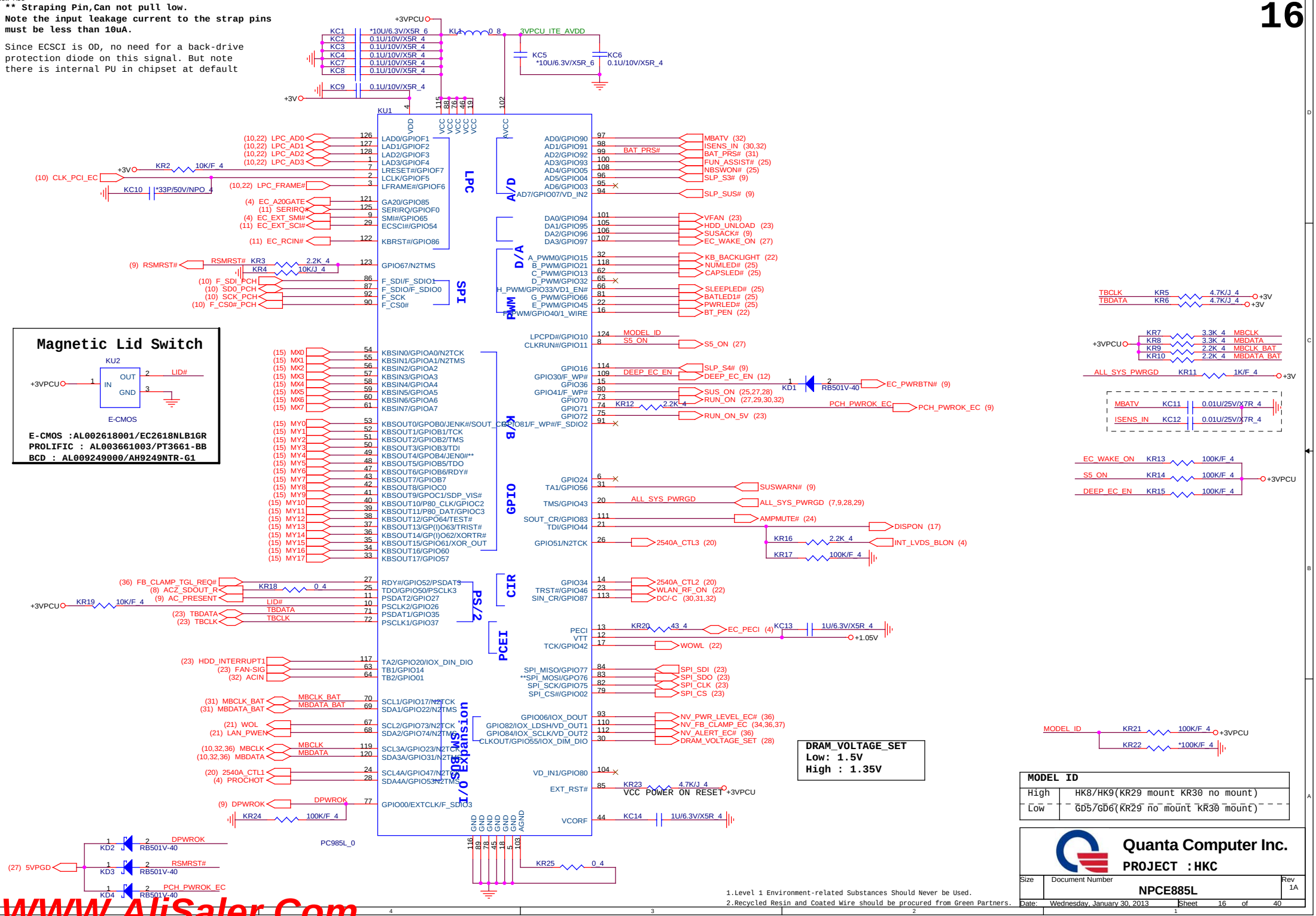

WWW.AliSaler.Com

Touch Screen

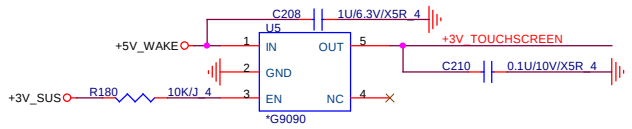

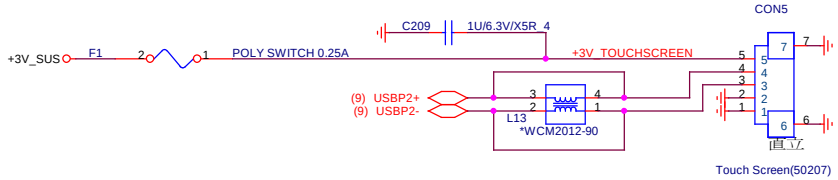

NFC module :
Vender : Samsung SNC-i20
Power consumption : Max. 160mW/48mA
Power Ripple +/- 50mV

FAST,UL/CSA

eDP

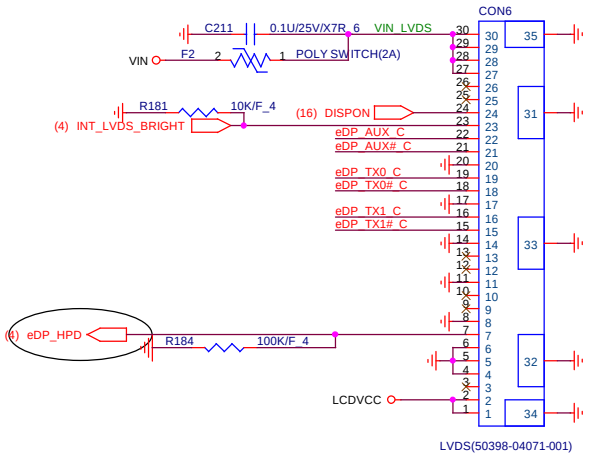

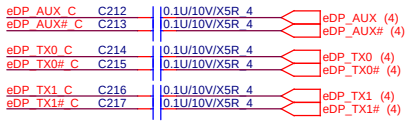

Camera HD specification
Voltage: Max. 3.6V
Current : Max. 200mA
OCP: 200mA ~ 300mA

NB LVDS enable

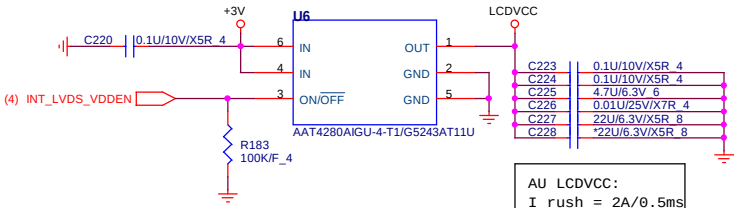

AU LCDVCC:
I rush = 2A/0.5ms
IDD = 0.3A

NFC

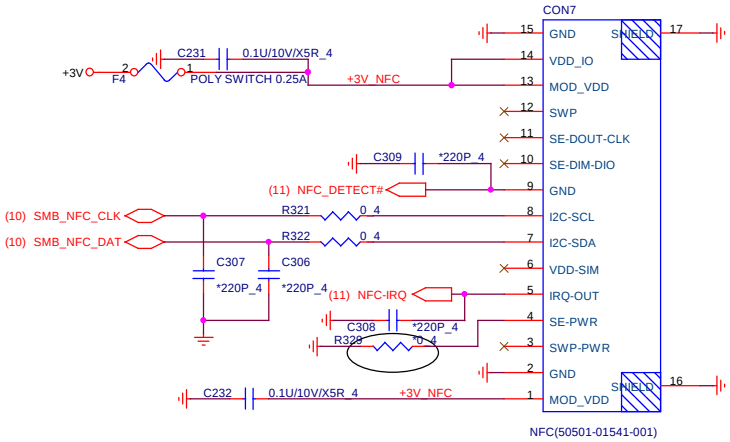

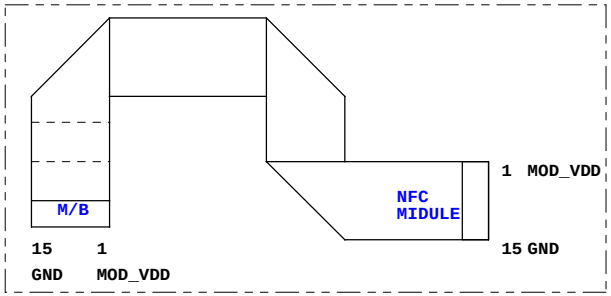

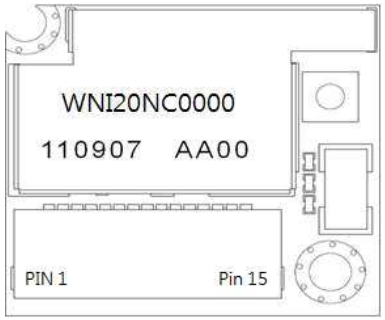

1.Level 1 Environment-related Substances Should Never be Used.
2.Recycled Resin and Coated Wire should be procured from Green Partners.

Quanta Computer Inc.		
PROJECT :HKC		
Size	Document Number	Rev
	CRT/LVDS	1A
Date: Monday, February 04, 2013	Sheet 17 of 40	

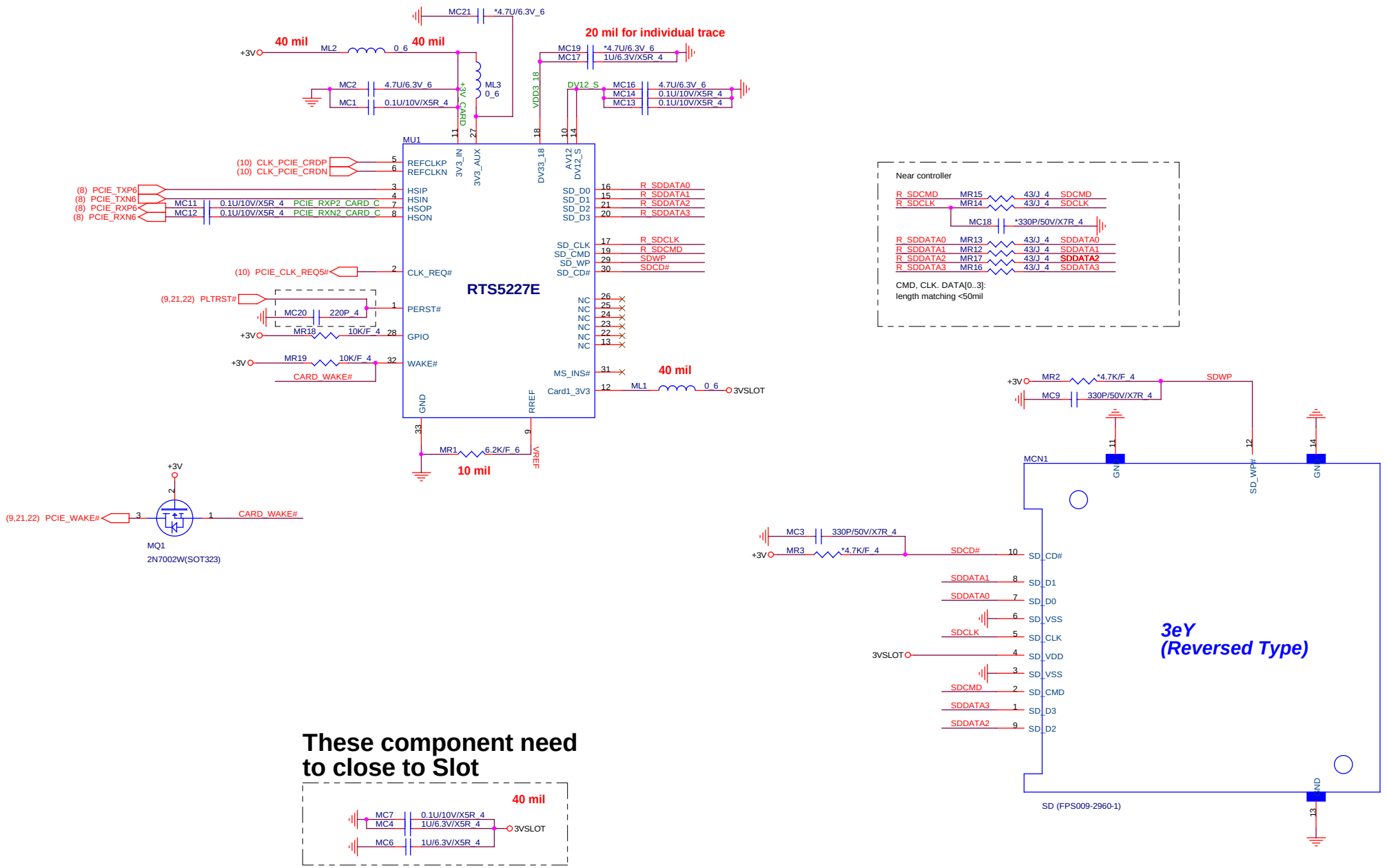

These component need to close to Slot

1.Level 1 Environment-related Substances Should Never be Used.
2.Recycled Resin and Coated Wire should be procured from Green Partners.

Quanta Computer Inc.
PROJECT : HKC

Size	Document Number	Rev
	CARD	1A

Date: Thursday, January 24, 2013 Sheet 18 of 40

WWW.AliSaler.Com

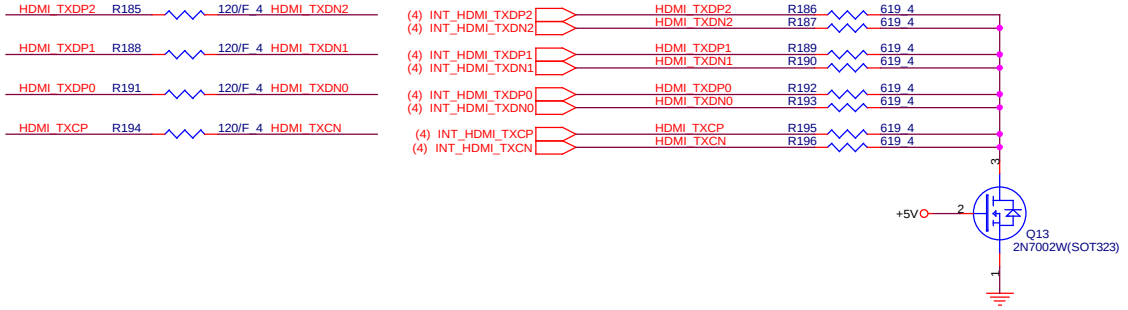

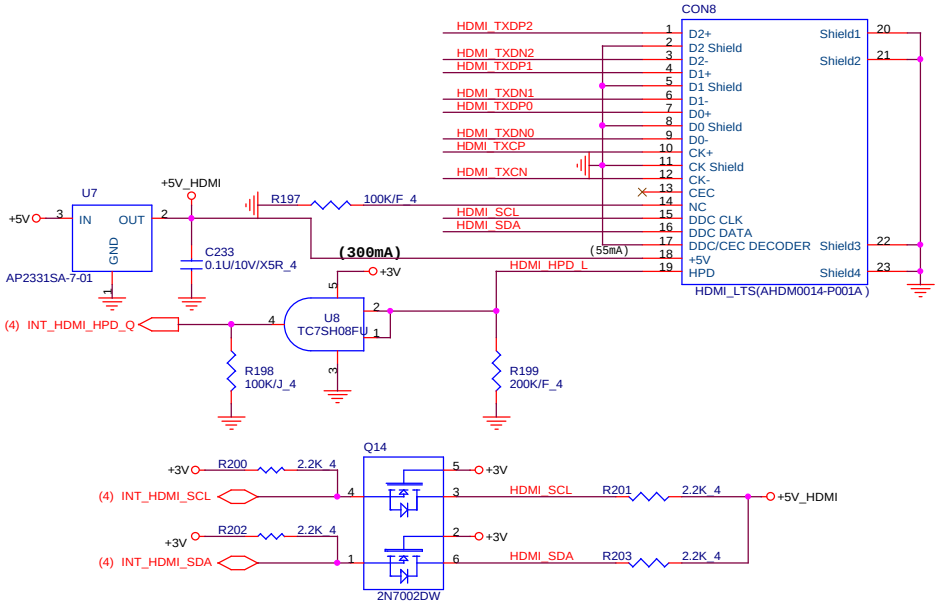

H/W Thermal Protect

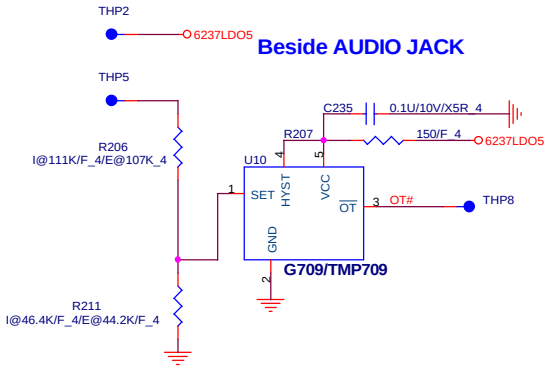

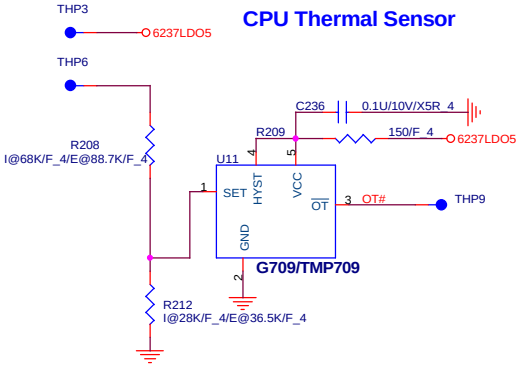

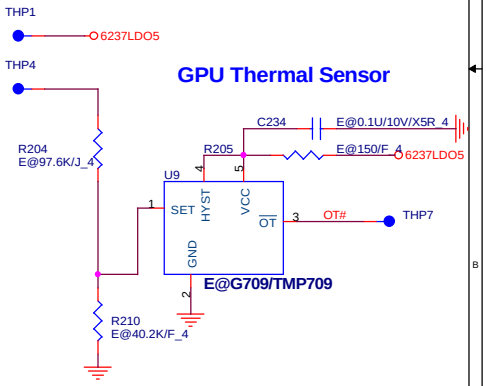

RSET(kΩ)= 0.0012T2 – 0.9308T + 96.147

95	18.5K
100	15K
107	10.3K
110	8.2K

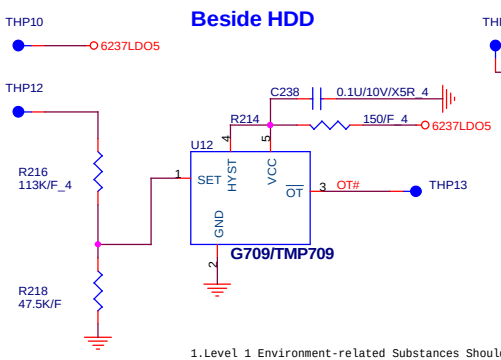

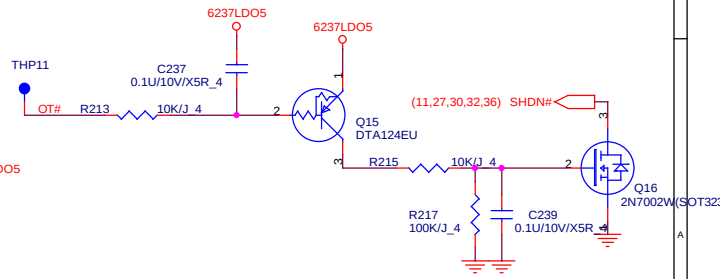

DIS SKU

Location of IC	Temp	R-Set	Parts in BOM	Max	Min
Near CPU sensor temp	70	R208=36.87K	36.5K	71	70
Near GFX sensor temp	65	R146=40.72K	40.2K	66.3	65.1
Near AUDIO sensor temp	60	R345=44.62K	44.2K	61.2	60

UMA SKU

Location of IC	Temp	R-Set	Parts in BOM	Max	Min
Near CPU sensor temp	81	R208=28.63K	28K	82.3	81.4
Near AUDIO sensor temp	58	R345=46.2K	46.4K	58.4	57.1

1.Level 1 Environment-related Substances Should Never be Used.
2.Recycled Resin and Coated Wire should be procured from Green Partners.

Quanta Computer Inc.
PROJECT : HKC

Size	Document Number	Rev
	HDMI/Thermal IC	1A

Date: Thursday, January 31, 2013 Sheet 19 of 40

MB to USB board

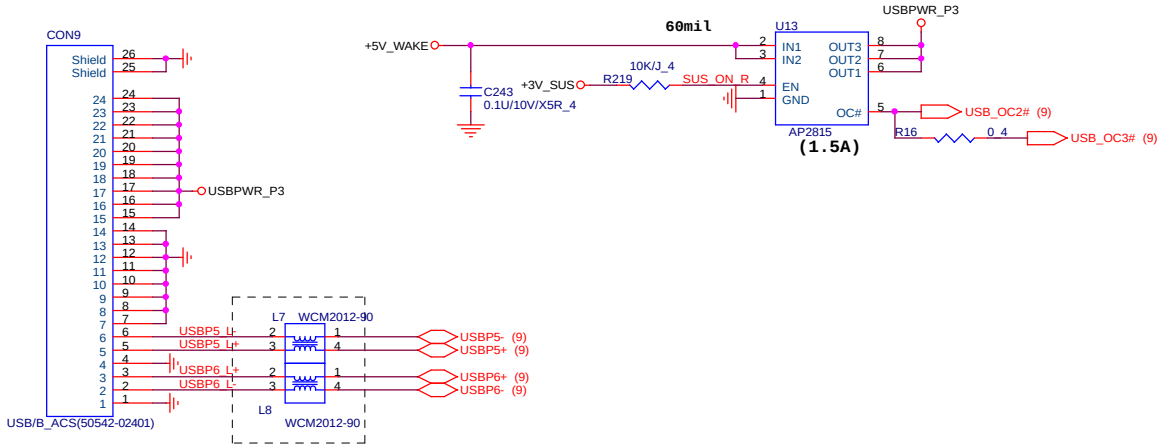

USB 3.0 PORT1

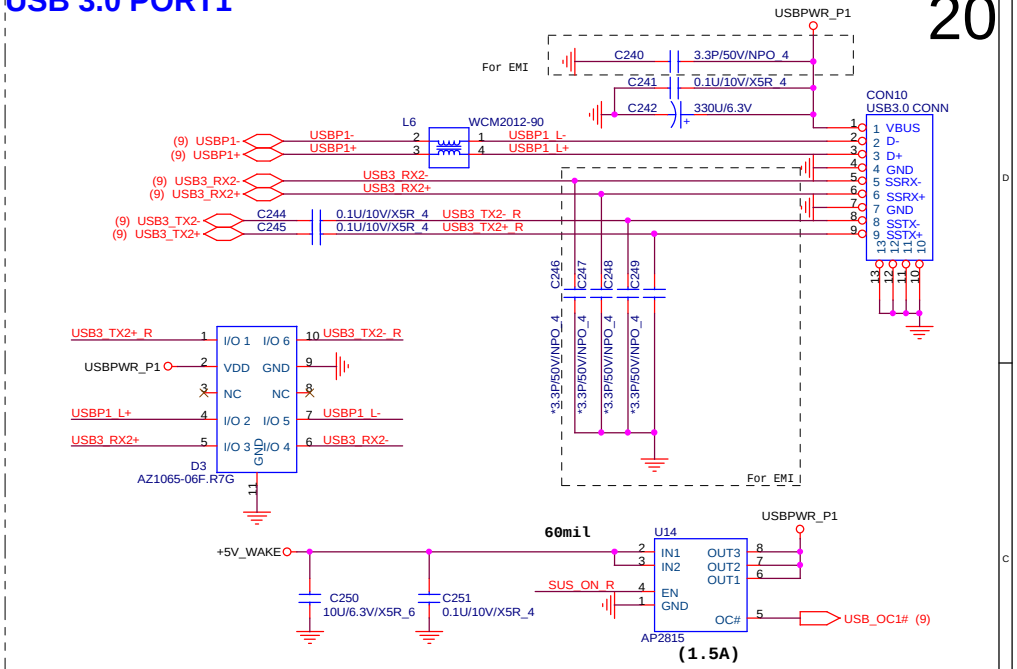

	TPS2540A		TPS2543	
ILIM_SEL	Pin15	Pin16	Pin15	Pin16
High	V			V
Low		V	V	

SDP : Standard Downstream Port
CDP : Charging downstream port
DCP : Dedicated Charging Port
Enable/Disable : setting by BIOS

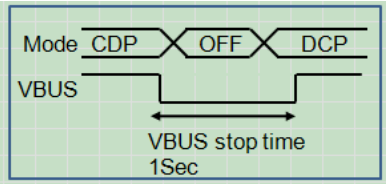

USB Charger

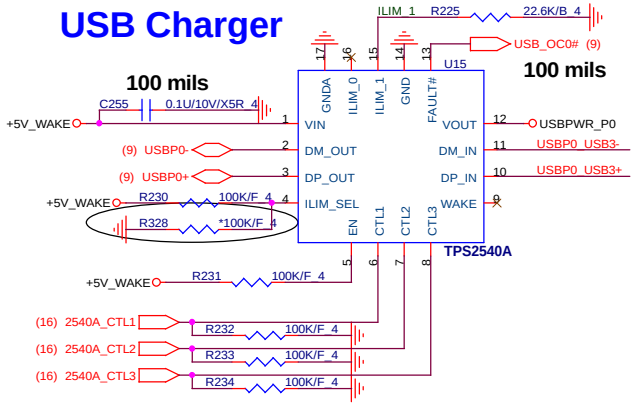

USB 3.0 PORT0

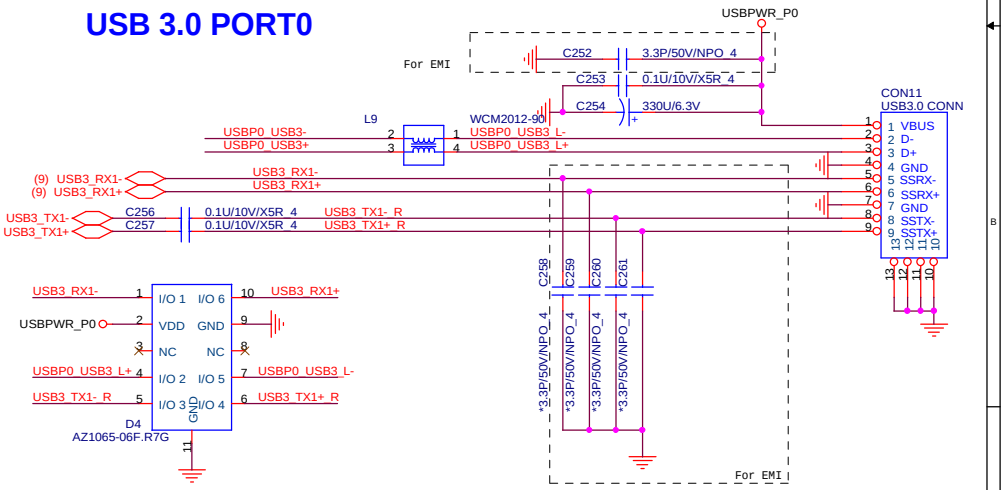

CTL_1	CTL_2	CTL_3	TPS 2540A/2543 Truth Table
0	0	0	OUT discharge, power switch OFF
0	X	1	DCP,Auto-detect(S3/S4/S5, 1.5A)
X	1	0	SDP, USB2.0 mode(S0, 0.5A)
1	0	0	DCP, BC SPEC1.2 only(S3/Deep standby/S4/S5, 1.5A)
1	0	1	DCP, Divider mode only(S3/S4/S5, 1.5A)
1	1	1	CDP (S0, 1.5A)

System State	USB Battery Charging Setting			
	Disable	C(1 2 3)	Enable	C(1 2 3)
S0	SDP	(X 1 0)	CDP	(1 1 1)
S3	SDP	(X 1 0)	DCP BC	(1 0 0)
DS3	Charger OFF	(0 0 0)	DCP BC	(1 0 0)
S4	Charger OFF	(0 0 0)	DCP BC	(1 0 0)
S5	Charger OFF	(0 0 0)	DCP BC	(1 0 0)

1.Level 1 Environment-related substances should Never be Used.
2.Recycled Resin and Coated Wire should be procured from Green Partners.

ILIM_SEL	(I LIMIT(A)= 48000/R)	
HI	I_LIM_1	
LO	I_LIM_0	48000/22.6K=2.123A

Quanta Computer Inc.
PROJECT : HKC

Size	Document Number	Rev
	USB/USB Charger	1A
Date: Thursday, January 31, 2013	Sheet 20 of 40	

WWW.AliSaler.Com

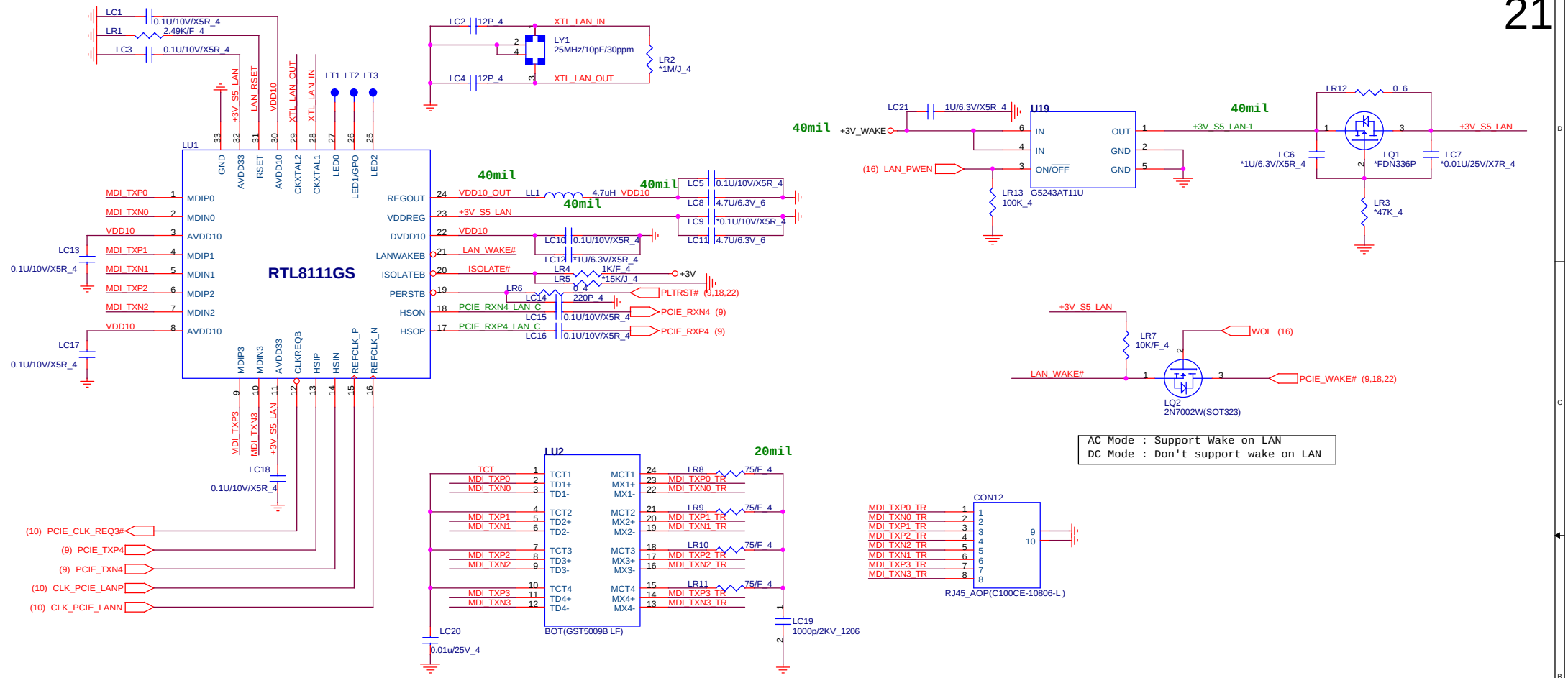

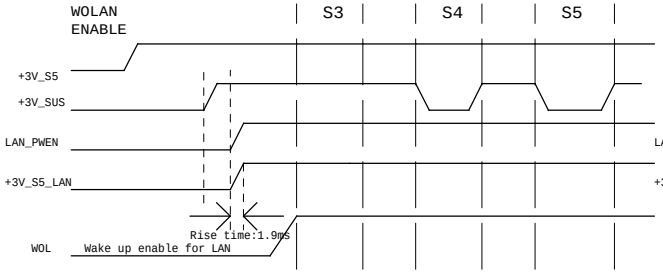

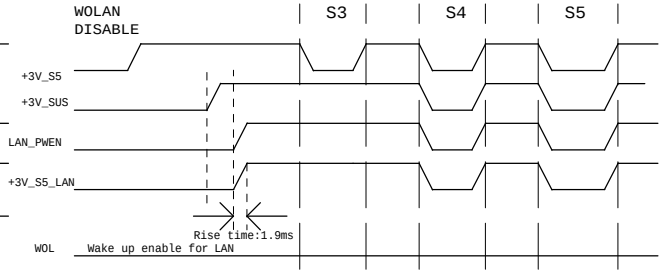

BIOS Setup	WOLAN DISABLE		WOLAN ENABLE	
	LAN_PWEN	WOL	LAN_PWEN	WOL
S3	H	H	H	H
S4	L	L	H	H
S5	L	L	H	H

1.Level 1 Environment-related Substances Should Never be Used.
2.Recycled Resin and Coated Wire should be procured from Green Partners.

Quanta Computer Inc.
PROJECT : HKC

Size	Document Number	Rev
	Giga LAN RTL8111GS	1A

Date: Friday, January 25, 2013 Sheet 21 of 40

WLAN/WIMAX/WIDI

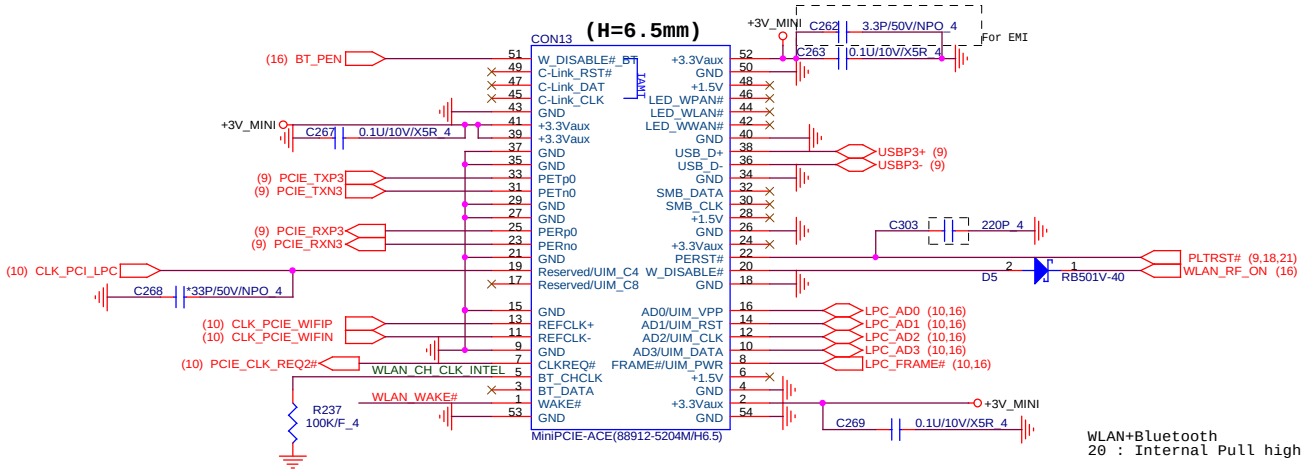

WLAN+Bluetooth
20 : Internal Pull high 25K ~ 58K

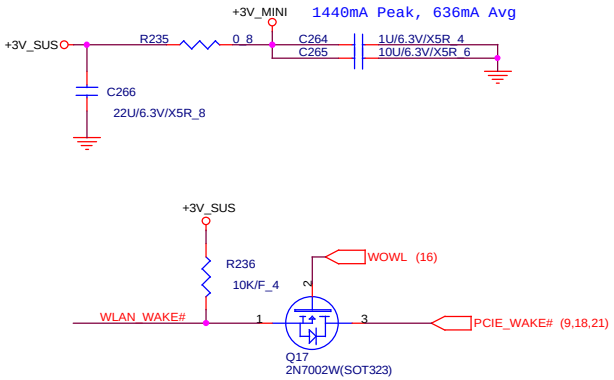

AC Mode : Support Wake on WLAN
DC Mode : Don't support wake on WLAN

KB BACKLIGHT

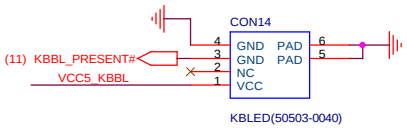

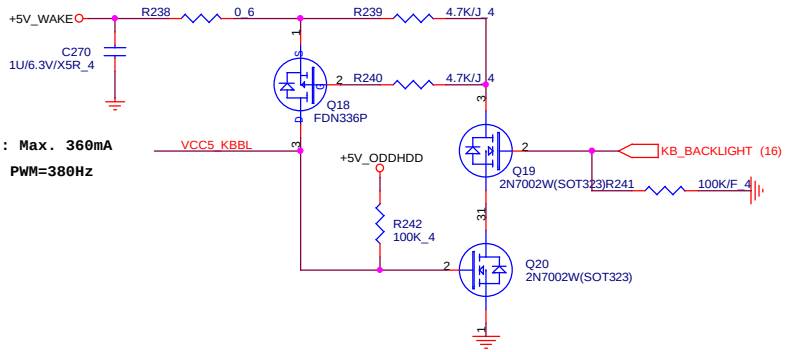

KB Backlight: Max. 360mA
KB Backlight PWM=380Hz

1.Level 1 Environment-related Substances Should Never be Used.
2.Recycled Resin and Coated Wire should be procured from Green Partners.

Quanta Computer Inc.
PROJECT : HKC

Size	Document Number	Rev
	WLAN/KB BL	1A

Date: Thursday, January 24, 2013 Sheet 22 of 40

WWW.AliSaler.Com

ODD CONNECTOR

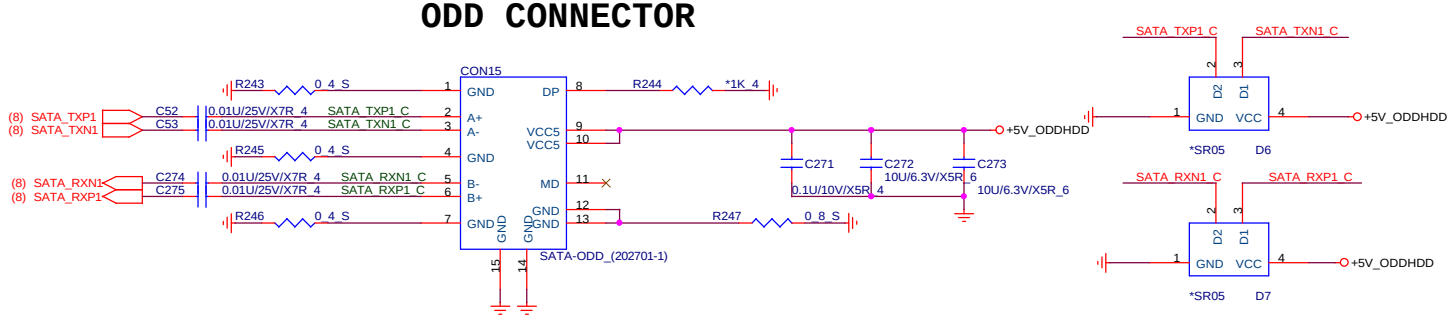

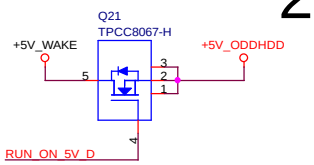

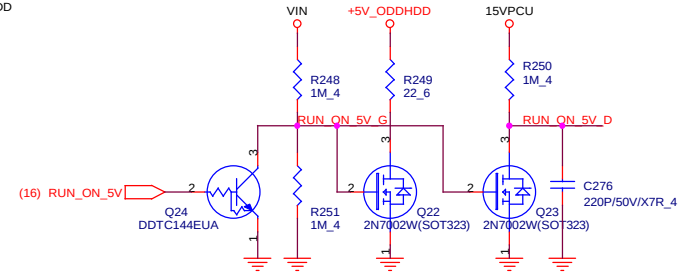

HDD CONNECTOR

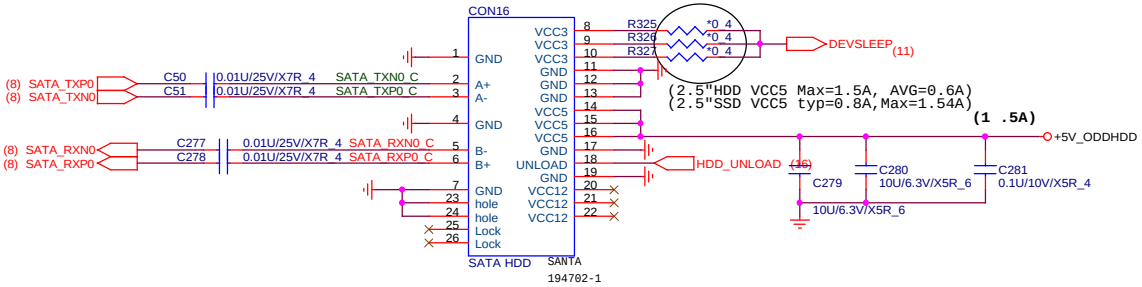

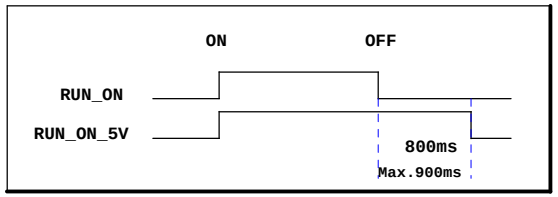

HDD PROTECT SPI INTERFACE

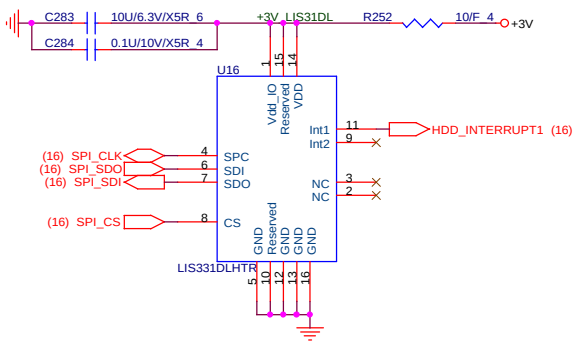

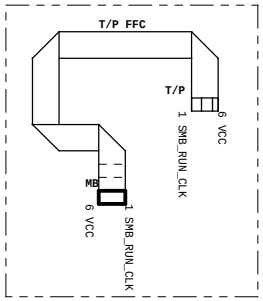

T/P Board to T/P

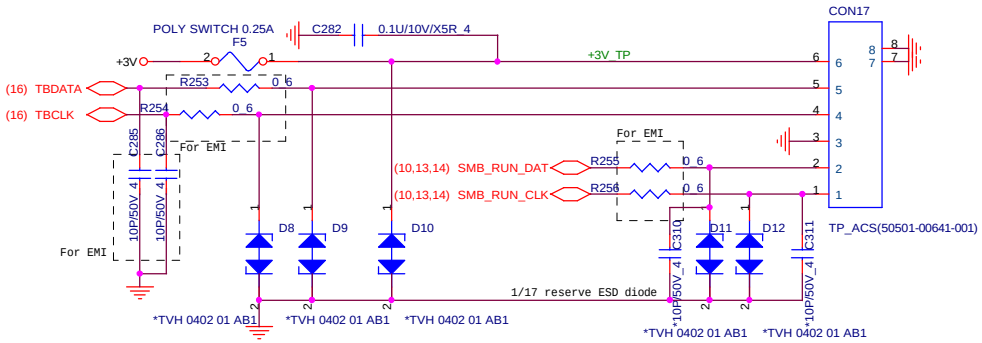

FAN

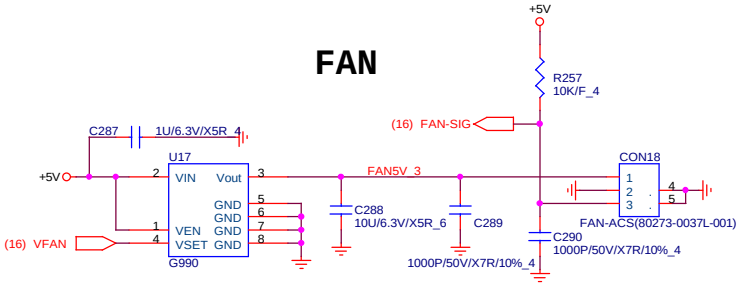

1.Level 1 Environment-related Substances Should Never be Used.
2.Recycled Resin and Coated Wire should be procured from Green Partners.

Quanta Computer Inc.
PROJECT : HKC

Size	Document Number	Rev
	HDD/ODD/TP/FAN	1A

Date: Thursday, January 31, 2013 Sheet 23 of 40

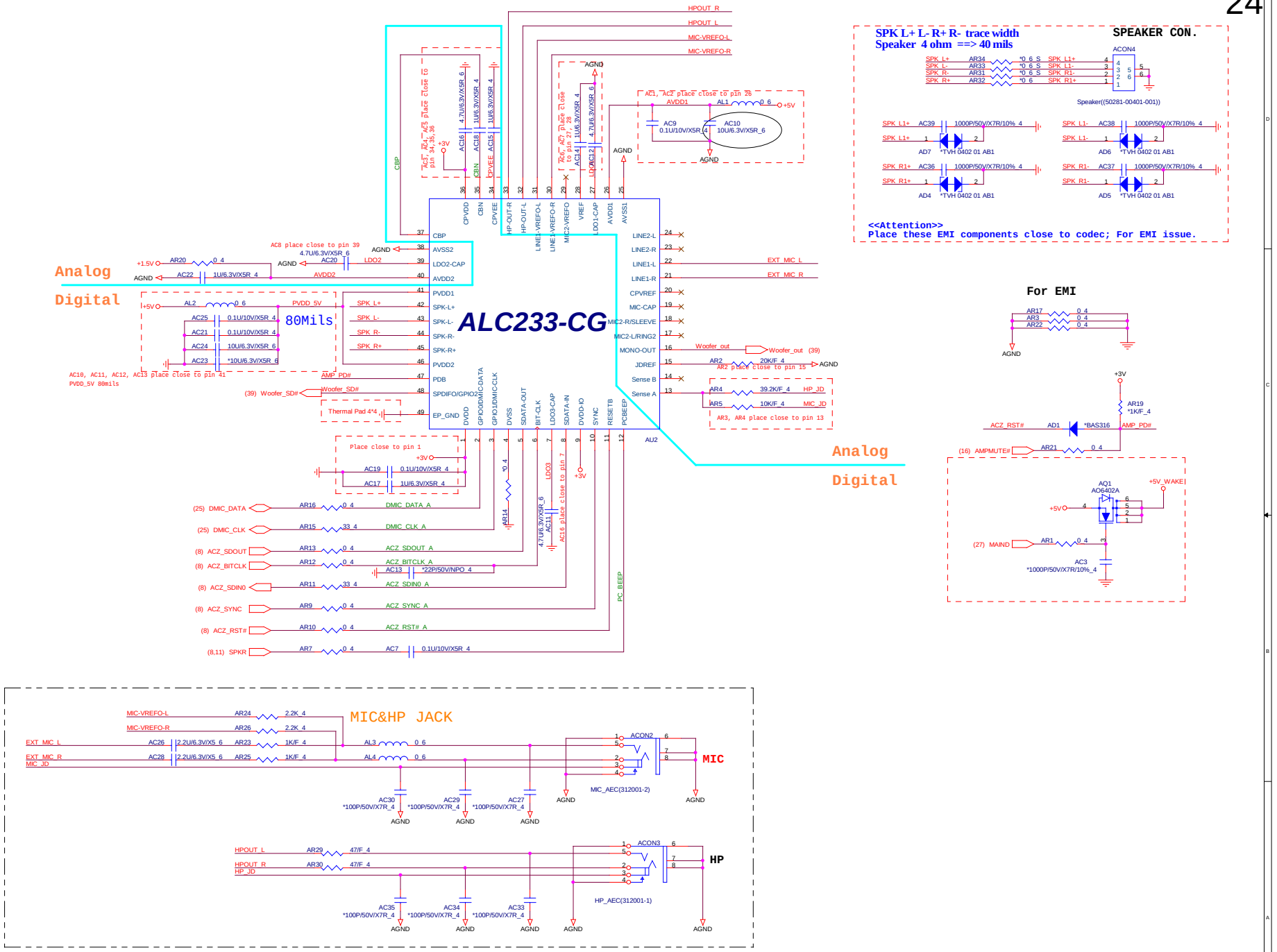

1.Level 1 Environment-related Substances Should Never be Used.
2.Recycled Resin and Coated Wire should be procured from Green Partners.

Quanta Computer Inc.
PROJECT : HKC

Size	Document Number	Rev
	Audio Codec ALC233-CG	1A

Date: Monday, January 28, 2013 Sheet 24 of 40

WWW.AliSaler.Com

Camera

USB Camera Power

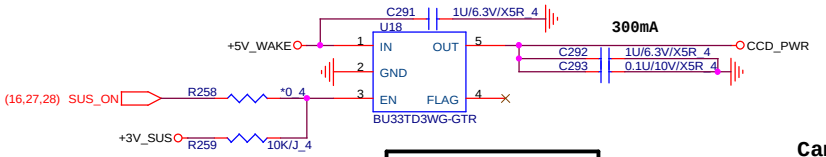

Camera HD specification
Voltage: Max. 3.6V
Current : Max. 200mA
OCP: 200mA ~ 300mA

Camera

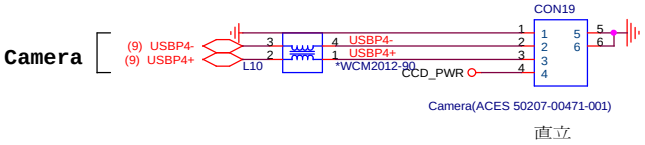

SATA LED

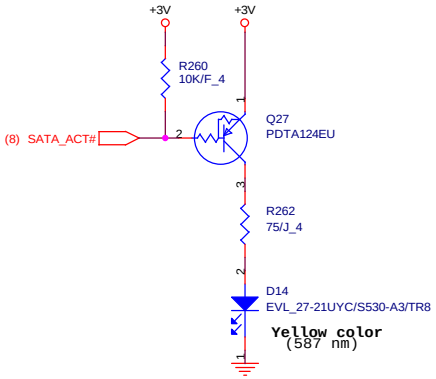

BATTERY LED

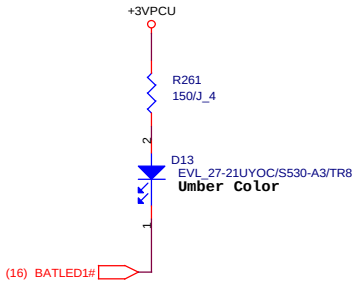

Power/Sleep LED

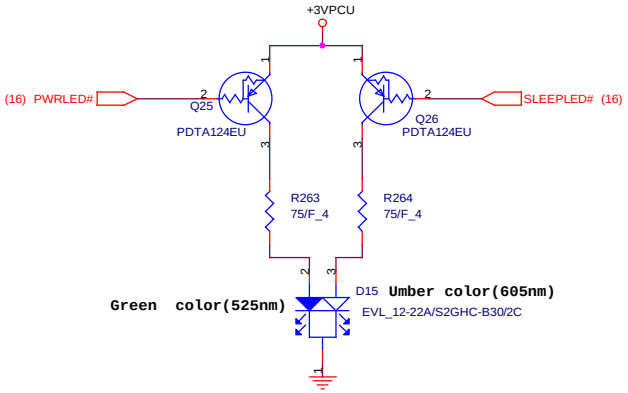

Power SW Board Connector

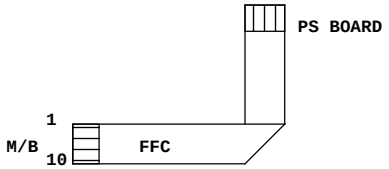

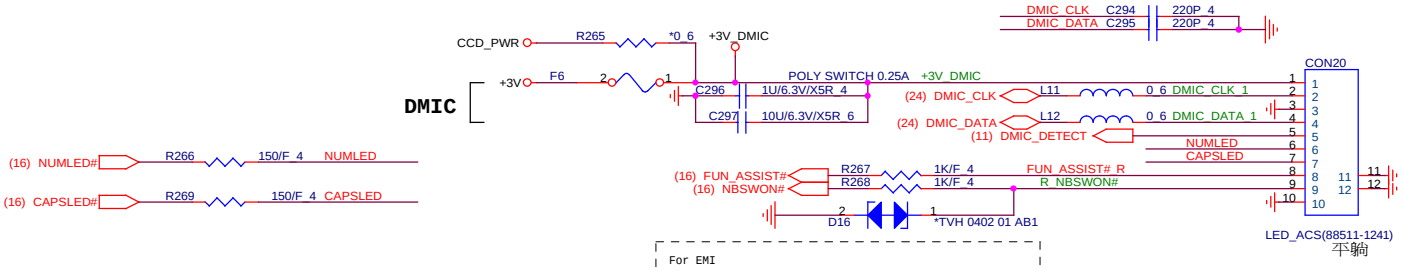

For EMI

CAPSLED	C298	*0.1U/10V/X5R_4
R_NBSWON#	C299	*0.1U/10V/X5R_4
FUN_ASSIST# R	C300	*0.1U/10V/X5R_4

1.Level 1 Environment-related Substances Should Never be Used.
2.Recycled Resin and Coated Wire should be procured from Green Partners.

Quanta Computer Inc.
PROJECT : HKC

Size	Document Number	Rev
	LED/RF/KB/PS	1A

Date: Thursday, January 24, 2013 Sheet 25 of 40

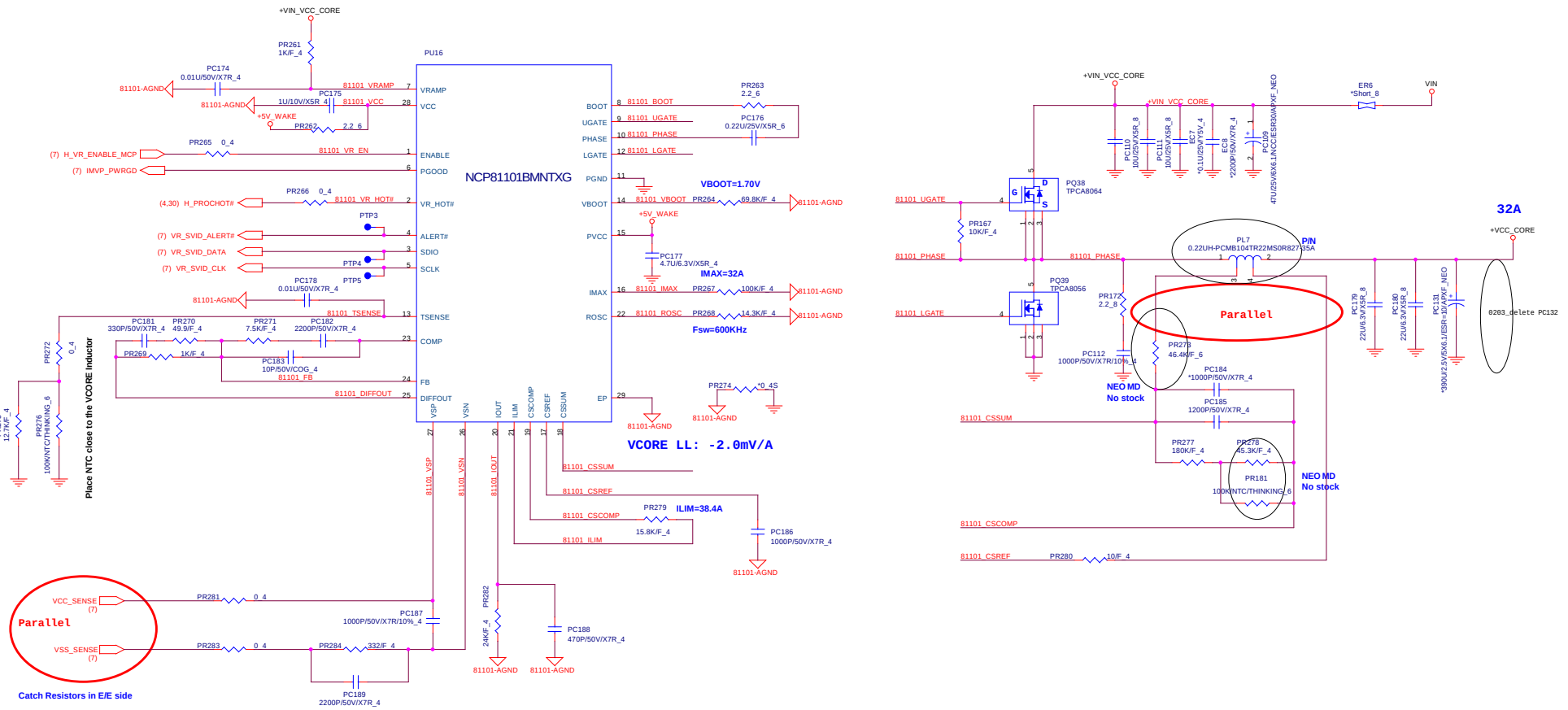

1.Level 1 Environment-related Substances Should Never be Used.
2.Recycled Resin and Coated Wire should be procured from Green Partners.

Quanta Computer Inc.
PROJECT : HKC

Size	Document Number	Rev
	+VCC_CORE (NCP81101)	1A

Date: Monday, February 04, 2013 Sheet 26 of 40

WWW.AliSaler.Com

3.3V & 5V

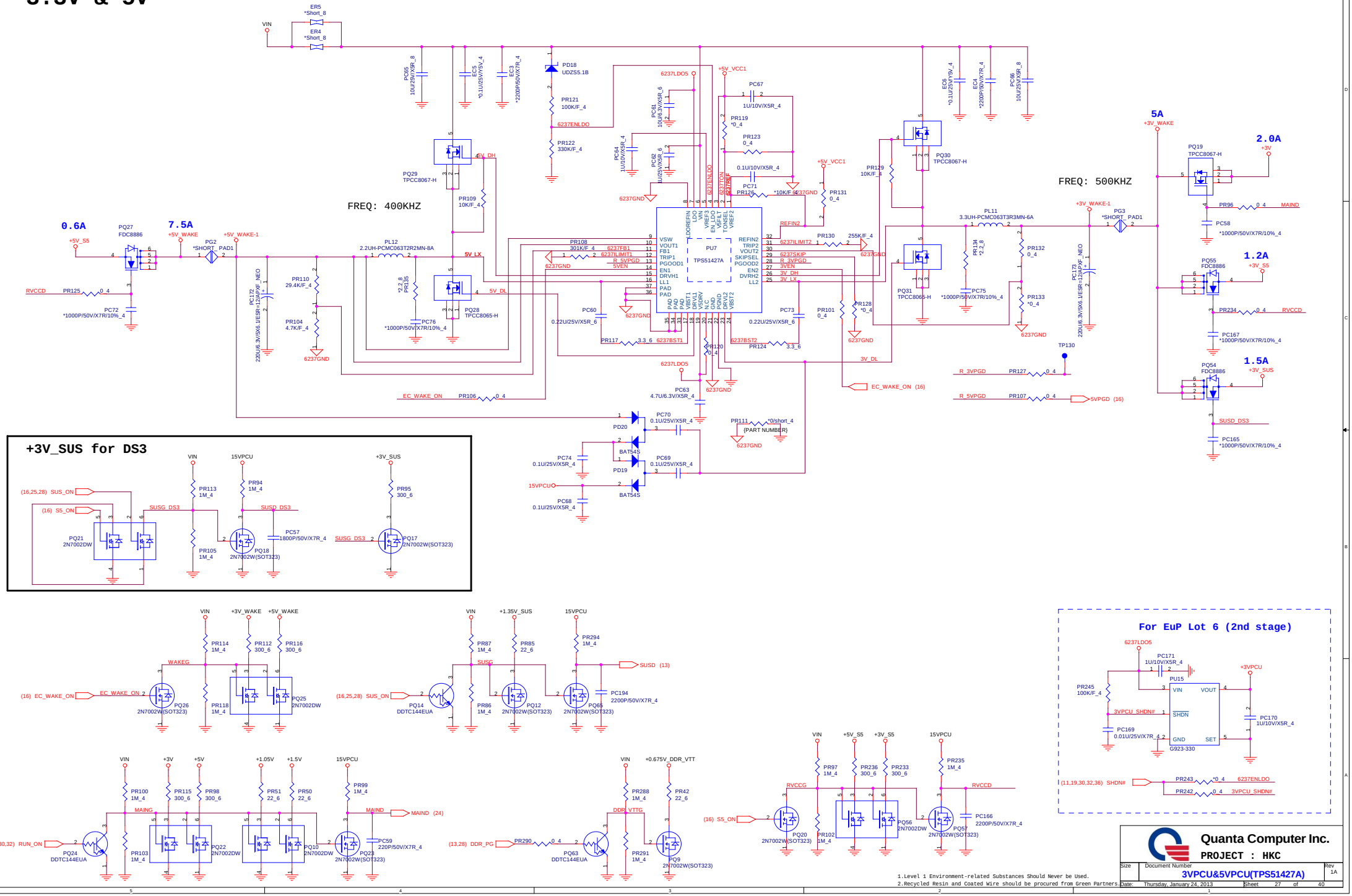
FREQ: 400KHZ
FREQ: 500KHZ
0.6A
7.5A
5A
2.0A
1.2A
1.5A
PU7
TPS51427A
+3V_SUS for DS3
For EuP Lot 6 (2nd stage)
PU15
G923-330
Quanta Computer Inc.
PROJECT : HKC
Size
Document Number
3VPCU&5VPCU(TPS51427A)
Rev
1A
Date: Thursday, January 24, 2013
Sheet 27 of 40
1.Level 1 Environment-related Substances Should Never be Used.
2.Recycled Resin and Coated Wire should be procured from Green Partners.

1.5VSUS & VTT_MEM

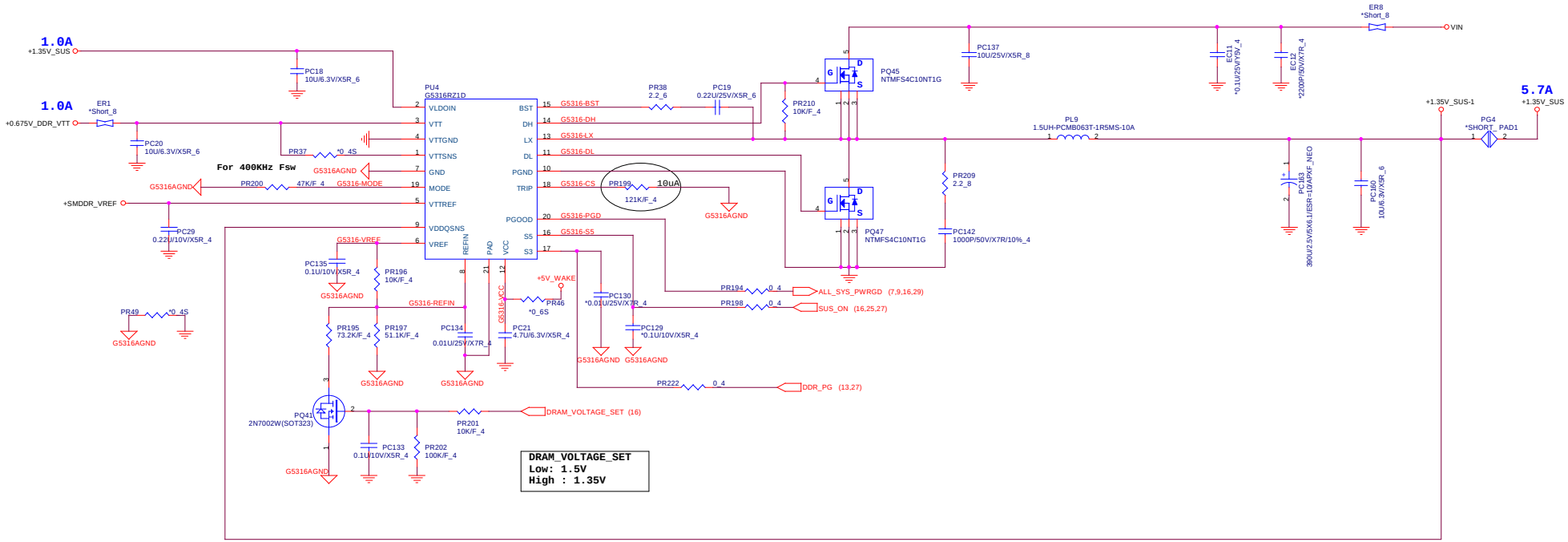

DRAM_VOLTAGE_SET
Low: 1.5V
High : 1.35V

MODE	Resistor on Mode	Fsw	Discharge Mode
3	200Kohm	400KHz	Tracking discharge
2	100Kohm	300KHz	
1	68Kohm	300KHz	**Non-tracking discharge**
0	**47Kohm**	**400KHz**	

STATE	S3	S5	1.5VSUS	VTTREF	VTT
S0	1	1	On	On	On
S3	0	1	On	On	Off/High Z
S4/S5	0	0	Off	Off	Off

1.Level 1 Environment-related Substances Should Never be Used.
2.Recycled Resin and Coated Wire should be procured from Green Partners.

Quanta Computer Inc.
PROJECT : HKC

Size	Document Number	Rev
	1.5VSUS/VTT_MEM	1A

Date: Thursday, January 24, 2013 Sheet 28 of 40

WWW.AliSaler.Com

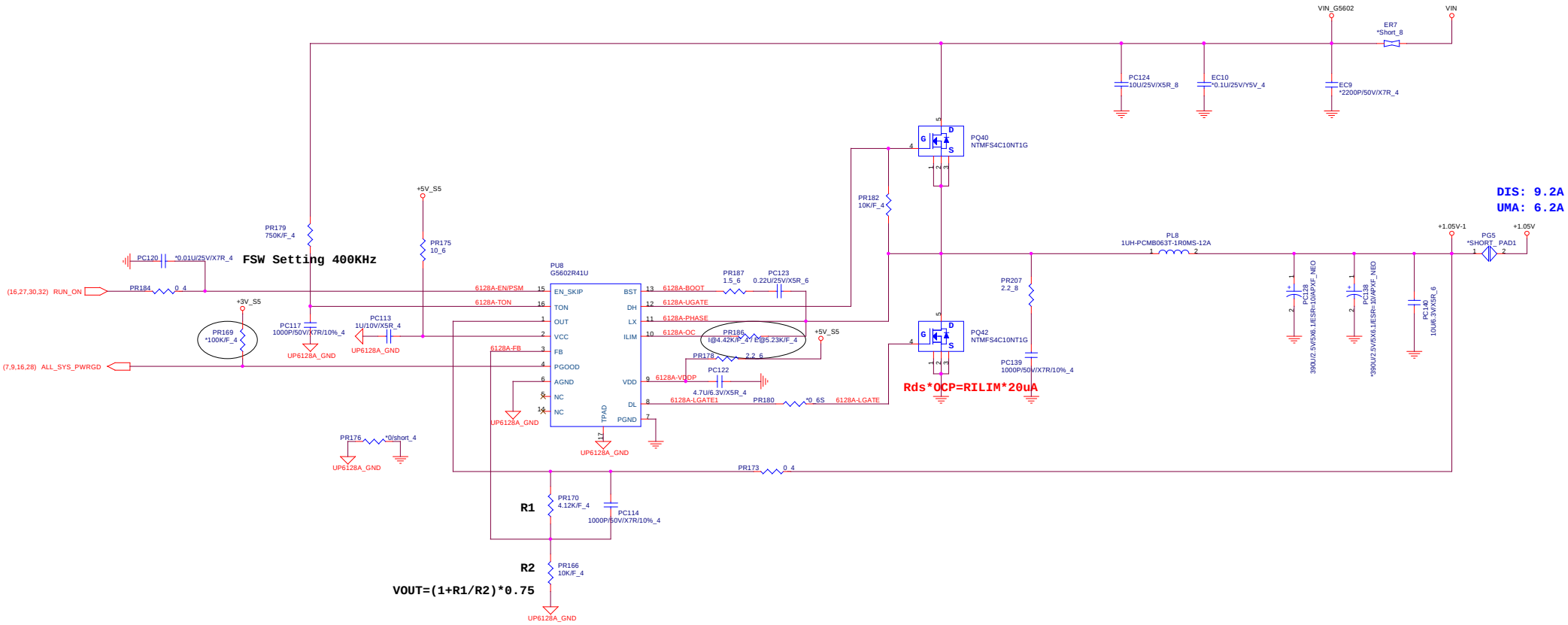

1.Level 1 Environment-related Substances Should Never be Used.
2.Recycled Resin and Coated Wire should be procured from Green Partners.

Quanta Computer Inc.

PROJECT : HKC

Size	Document Number	Rev
	+1.05V (UP1522RQDD)	1A

Date: Wednesday, January 30, 2013 Sheet 29 of 40

VCC1.5

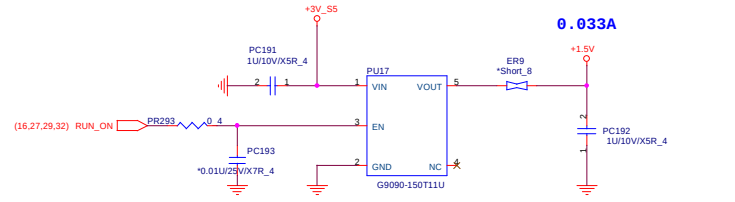

One-Shot 10ms PROCHOT# For ADP/BAT

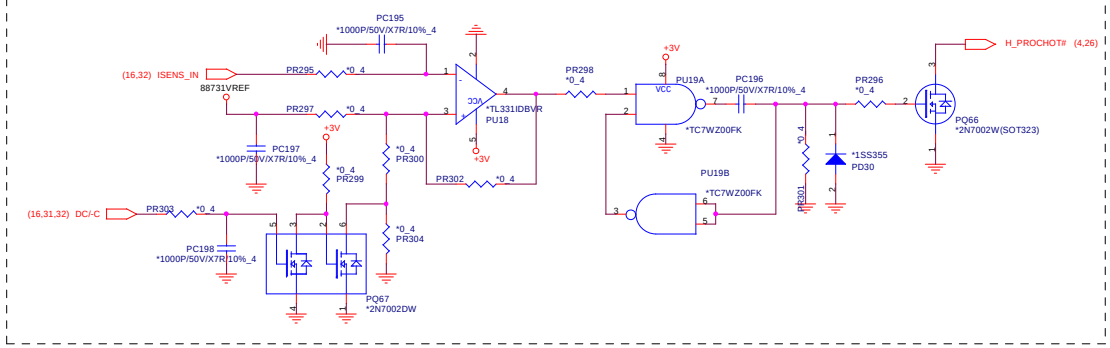

Thermal Protection and Battery UVP for VEDS

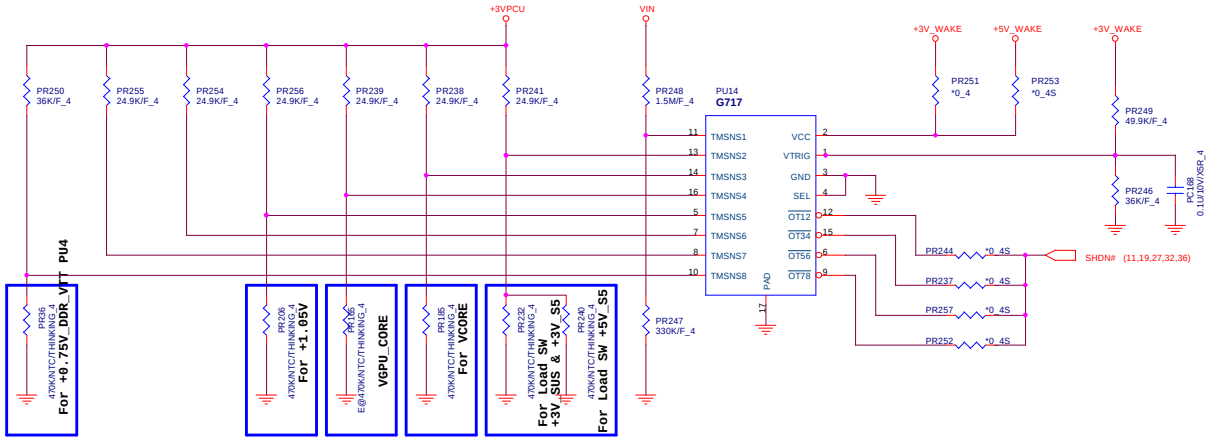

1.Level 1 Environment-related Substances Should Never be Used.
2.Recycled Resin and Coated Wire should be procured from Green Partners.

Quanta Computer Inc.
PROJECT : HKC

Size	Document Number	Rev
	VCC1.8	1A

Date: Thursday, January 24, 2013 Sheet 30 of 40

WWW.AliSaler.Com

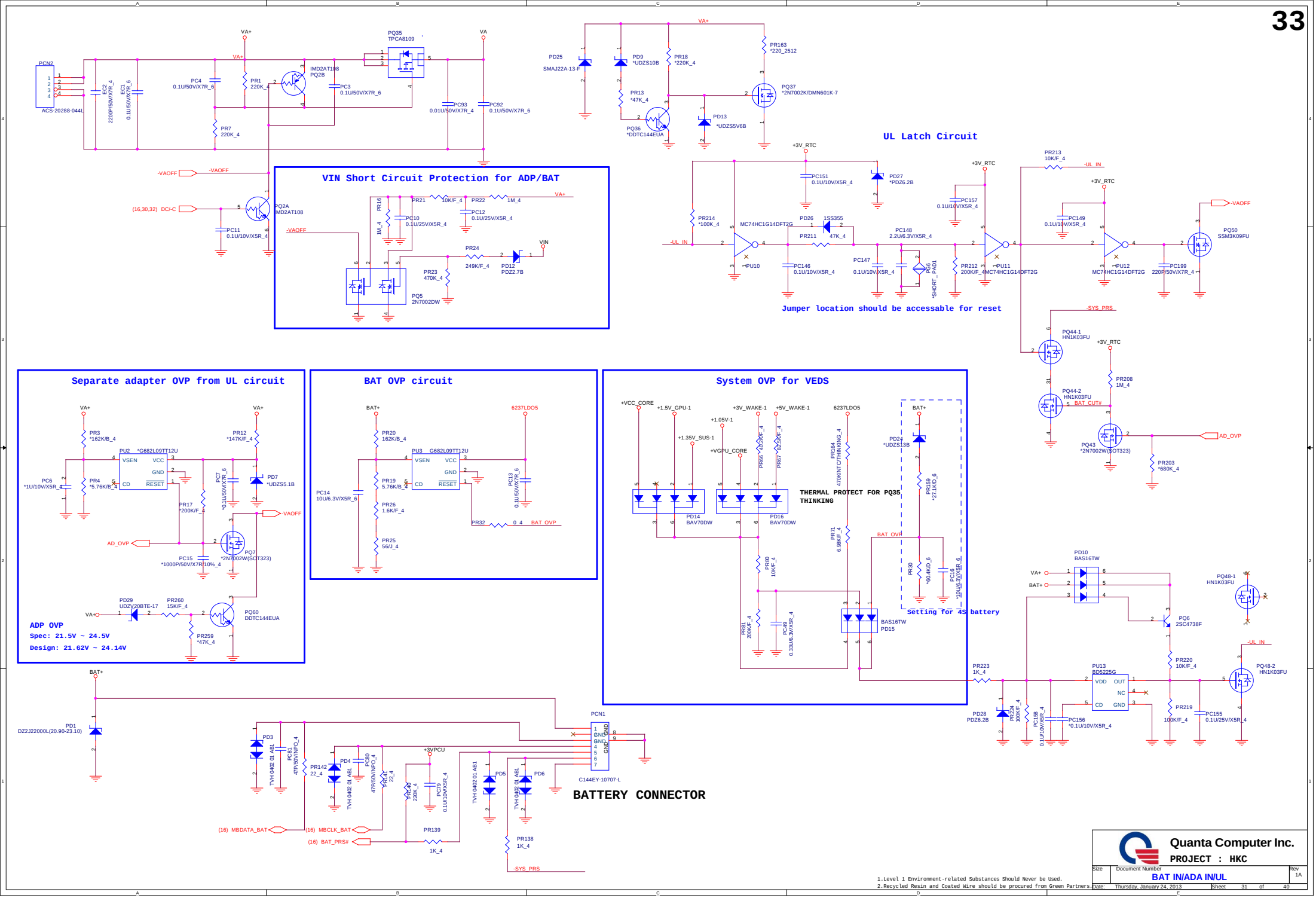

1.Level 1 Environment-related Substances Should Never be Used.
2.Recycled Resin and Coated Wire should be procured from Green Partners.

Quanta Computer Inc.
PROJECT : HKC

Size	Document Number	Rev
	BAT IN/ADA IN/UL	1A

Date: Thursday, January 24, 2013 Sheet 31 of 40

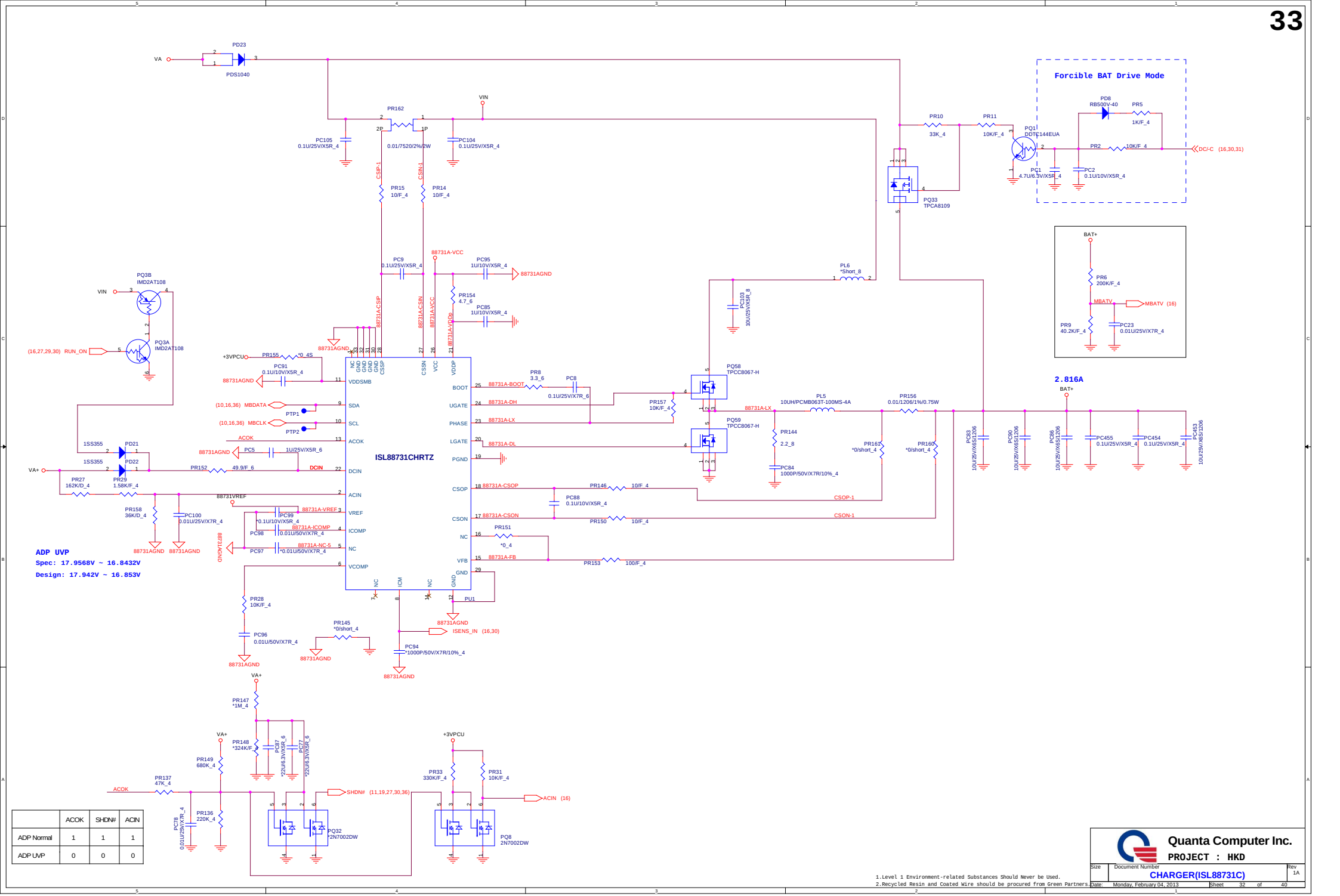

	ACOK	SHDN#	ACIN
ADP Normal	1	1	1
ADP UVP	0	0	0

1.Level 1 Environment-related Substances Should Never be Used.
2.Recycled Resin and Coated Wire should be procured from Green Partners.

Quanta Computer Inc.
PROJECT : HKD

Size	Document Number	Rev
	CHARGER(ISL88731C)	1A

Date: Monday, February 04, 2013 Sheet 32 of 40

WWW.AliSaler.Com

VGA-CORE

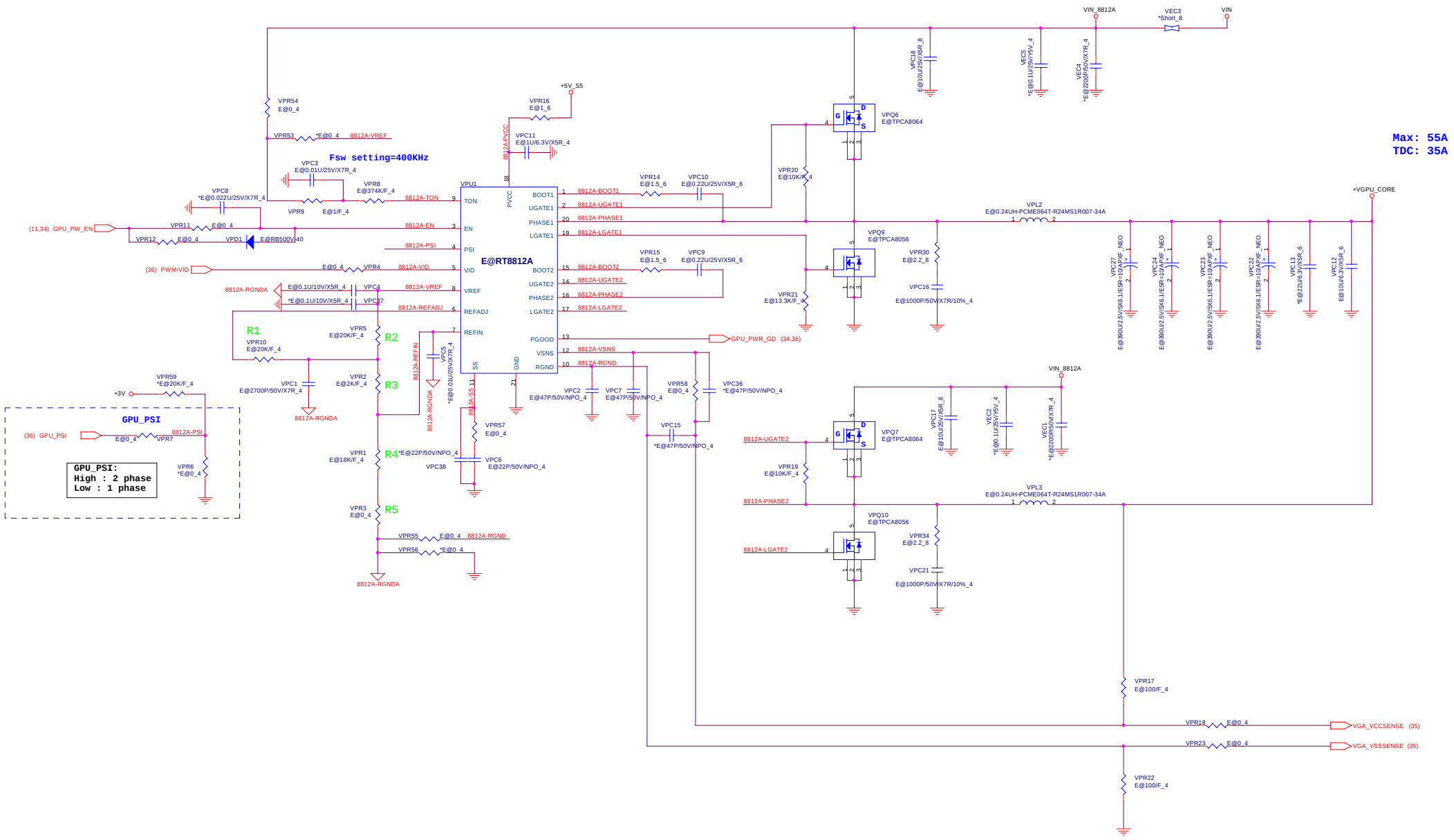

1.Level 1 Environment-related Substances Should Never be Used.
2.Recycled Resin and Coated Wire should be procured from Green Partners.

Quanta Computer Inc.
PROJECT : HKC

Size	Document Number	Rev
	VGA_CORE (RT8812A)	1A

Date: Monday, February 04, 2013 Sheet 33 of 40

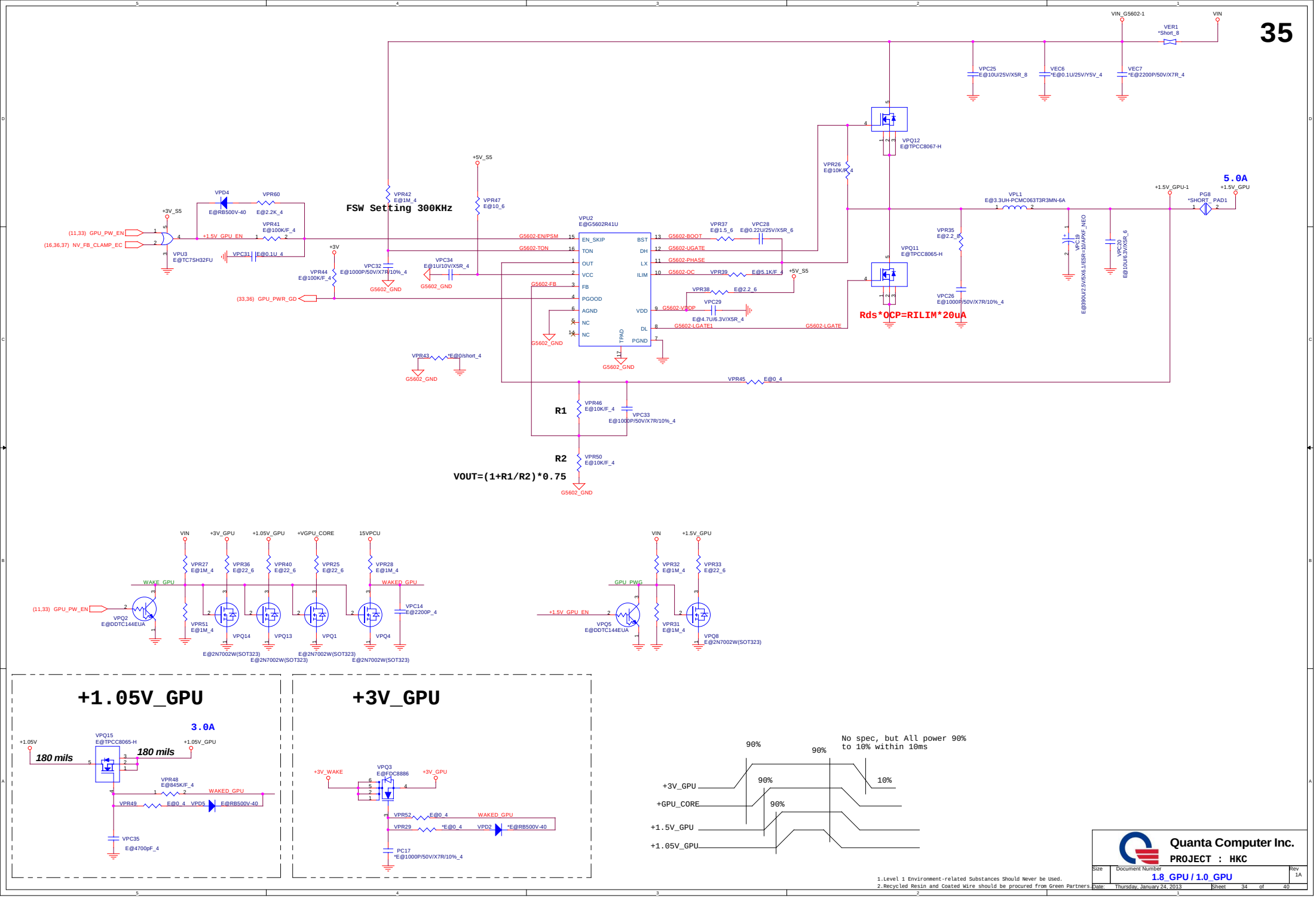

1.Level 1 Environment-related Substances Should Never be Used.
2.Recycled Resin and Coated Wire should be procured from Green Partners.

Quanta Computer Inc.
PROJECT : HKC

Size	Document Number	Rev
	1.8_GPU / 1.0_GPU	1A

Date: Thursday, January 24, 2013 Sheet 34 of 40

WWW.AliSaler.Com

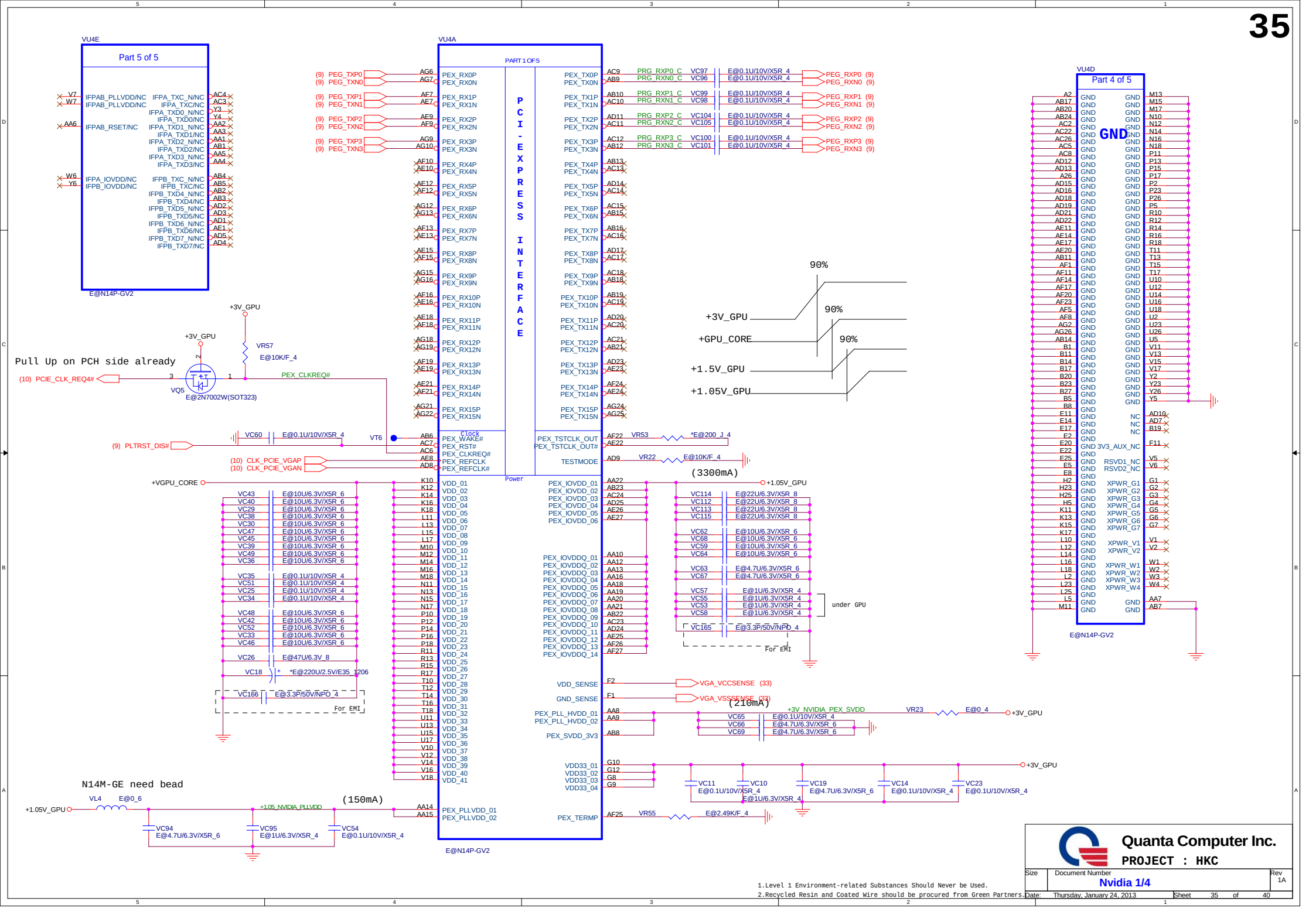

1.Level 1 Environment-related Substances Should Never be Used.
2.Recycled Resin and Coated Wire should be procured from Green Partners.

Quanta Computer Inc.
PROJECT : HKC

Size	Document Number	Rev
	Nvidia 1/4	1A

Date: Thursday, January 24, 2013 Sheet 35 of 40

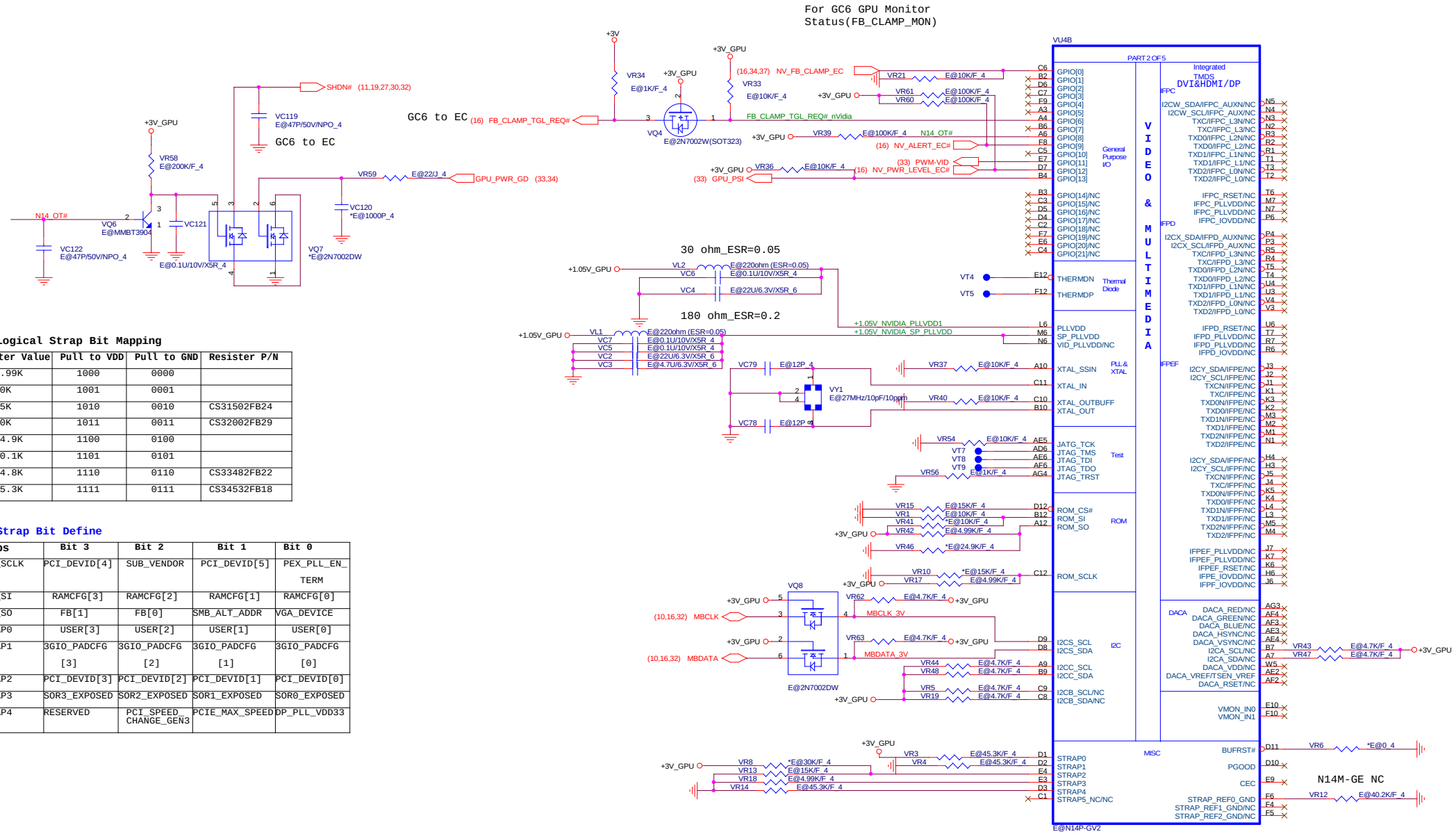

N14 Logical Strap Bit Mapping

Resister Value	Pull to VDD	Pull to GND	Resister P/N
4.99K	1000	0000	
10K	1001	0001	
15K	1010	0010	CS31502FB24
20K	1011	0011	CS32002FB29
24.9K	1100	0100	
30.1K	1101	0101	
34.8K	1110	0110	CS33482FB22
45.3K	1111	0111	CS34532FB18

N14 Strap Bit Define

Straps	Bit 3	Bit 2	Bit 1	Bit 0
ROM_SCLK	PCI_DEVID[4]	SUB_VENDOR	PCI_DEVID[5]	PEX_PLL_EN_ TERM
ROM_SI	RAMCFG[3]	RAMCFG[2]	RAMCFG[1]	RAMCFG[0]
ROM_SO	FB[1]	FB[0]	SMB_ALT_ADDR	VGA_DEVICE
STRAP0	USER[3]	USER[2]	USER[1]	USER[0]
STRAP1	3GIO_PADCFG [3]	3GIO_PADCFG [2]	3GIO_PADCFG [1]	3GIO_PADCFG [0]
STRAP2	PCI_DEVID[3]	PCI_DEVID[2]	PCI_DEVID[1]	PCI_DEVID[0]
STRAP3	SOR3_EXPOSED	SOR2_EXPOSED	SOR1_EXPOSED	SOR0_EXPOSED
STRAP4	RESERVED	PCI_SPEED_ CHANGE_GEN3	PCIE_MAX_SPEED	DP_PLL_VDD33

	VRAM Capacity	VRAM Vender	ID	VR1	Mfr P/N	Quanta P/N
N14M-LP N14P-GV2	128Mx16 DDR3	Samsung	0111	PD45.3K	K4W2G1646E-BC11	AKD5MGGT525
		Hynix	0110	PD34.8K	H5TQ2G63DFR-11C	AKD5MGWTW15
	256Mx16 DDR3	Samsung	0011	PD20K	K4W4G1646B-HC11	AKD5MGWT525
		Hynix	0010(TBD)	PD15K	H5TC4G63AFR-11C	AKD5PGWTW10

1.Level 1 Environment-related Substances Should Never be Used.
2.Recycled Resin and Coated Wire should be procured from Green Partners.

Quanta Computer Inc.
PROJECT : HKC

Size	Document Number	Rev
	Nvidia 2/4	1A

Date: Thursday, January 24, 2013 Sheet 36 of 40

WWW.AliSaler.Com

Down Side VRAM TOP/BOT

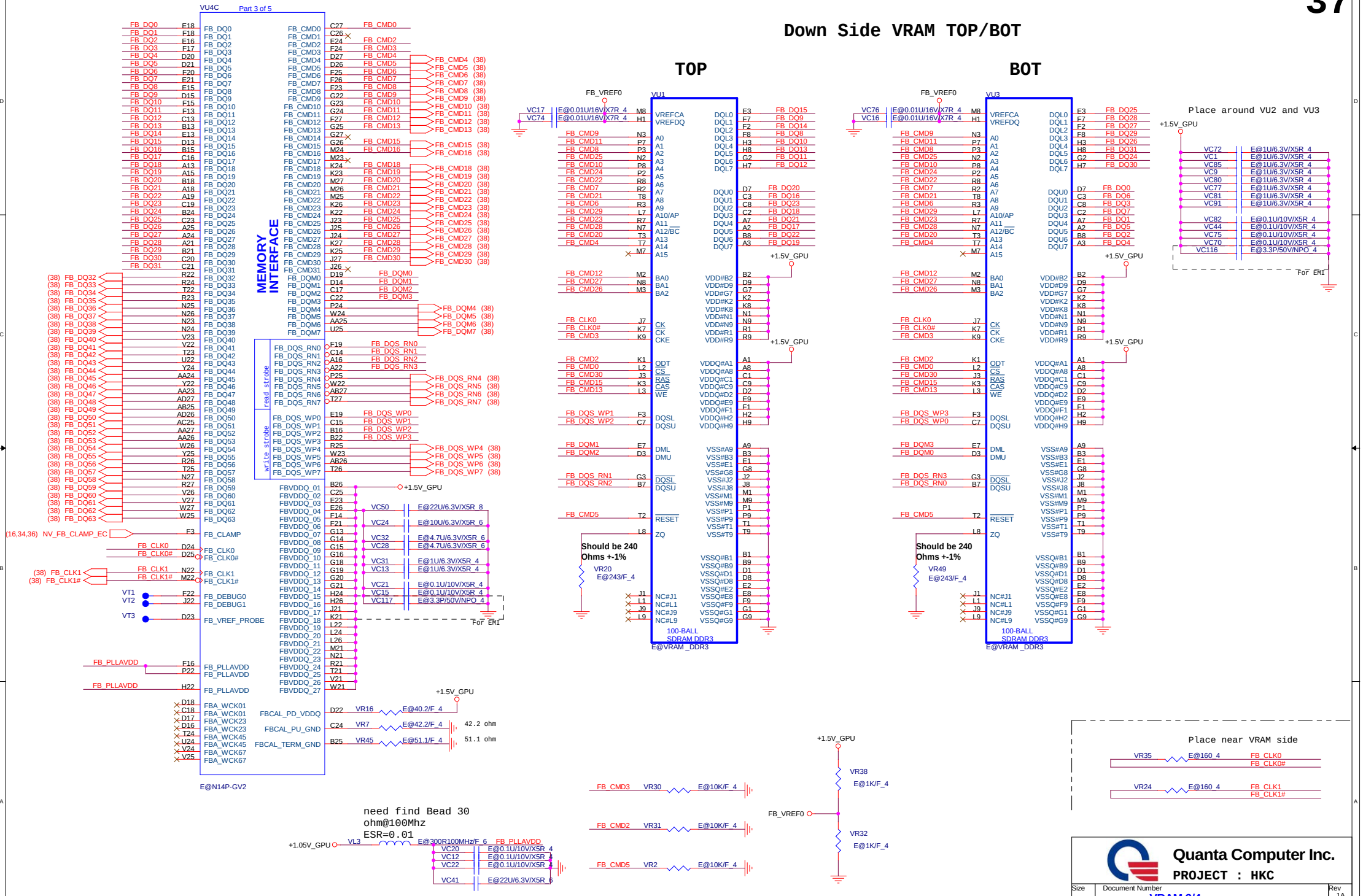

1.Level 1 Environment-related Substances Should Never be Used.
2.Recycled Resin and Coated Wire should be procured from Green Partners.

Quanta Computer Inc.
PROJECT : HKC

Size	Document Number	Rev
	VRAM 3/4	1A

Date: Thursday, January 24, 2013 Sheet 37 of 40

Up Side VRAM TOP/BOT

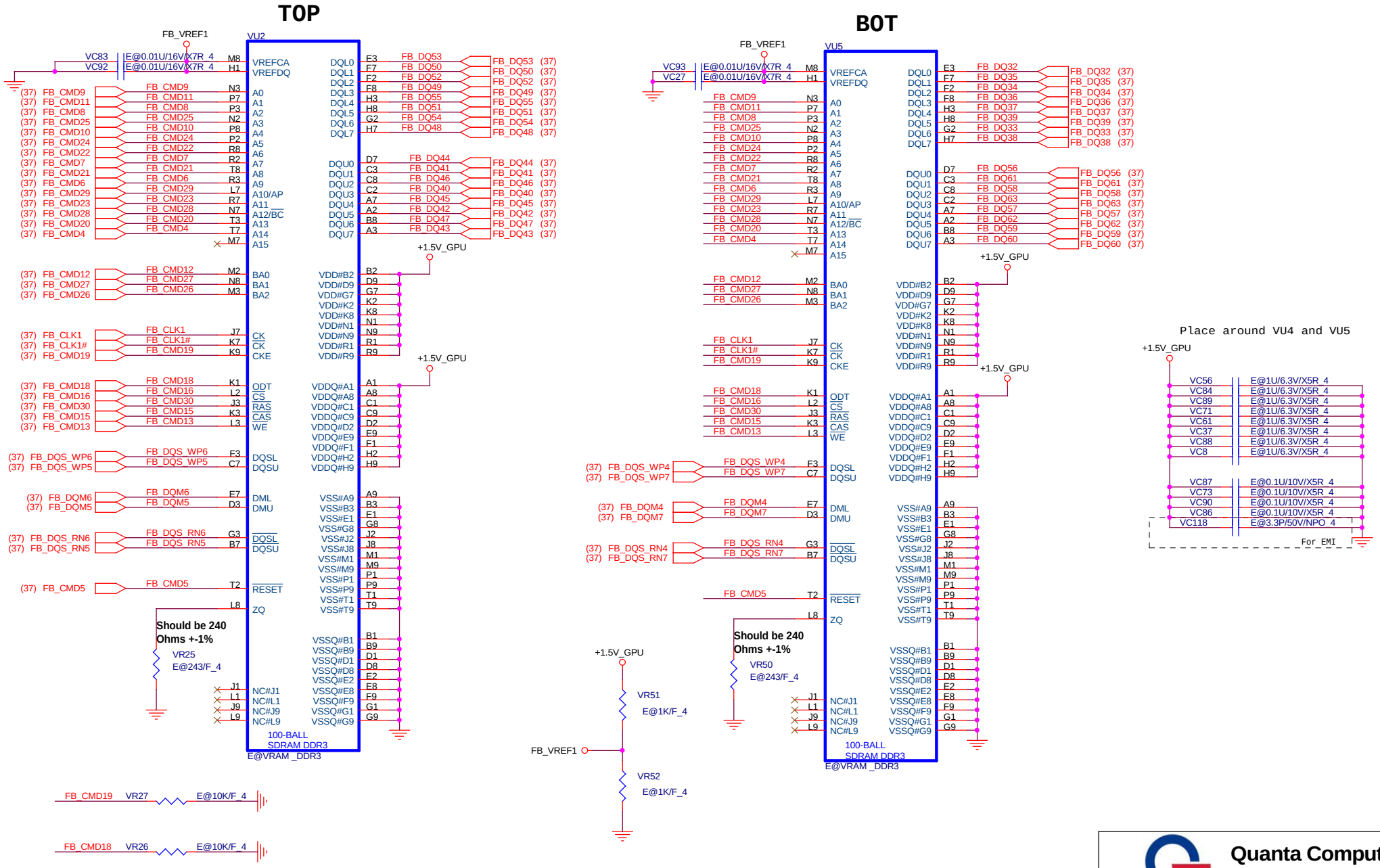

1.Level 1 Environment-related Substances Should Never be Used.
2.Recycled Resin and Coated Wire should be procured from Green Partners.

Quanta Computer Inc.

PROJECT : HKC

Size	Document Number	Rev
	VRAM 4/4	1A

Date: Thursday, January 24, 2013 Sheet 38 of 40

WWW.AliSaler.Com

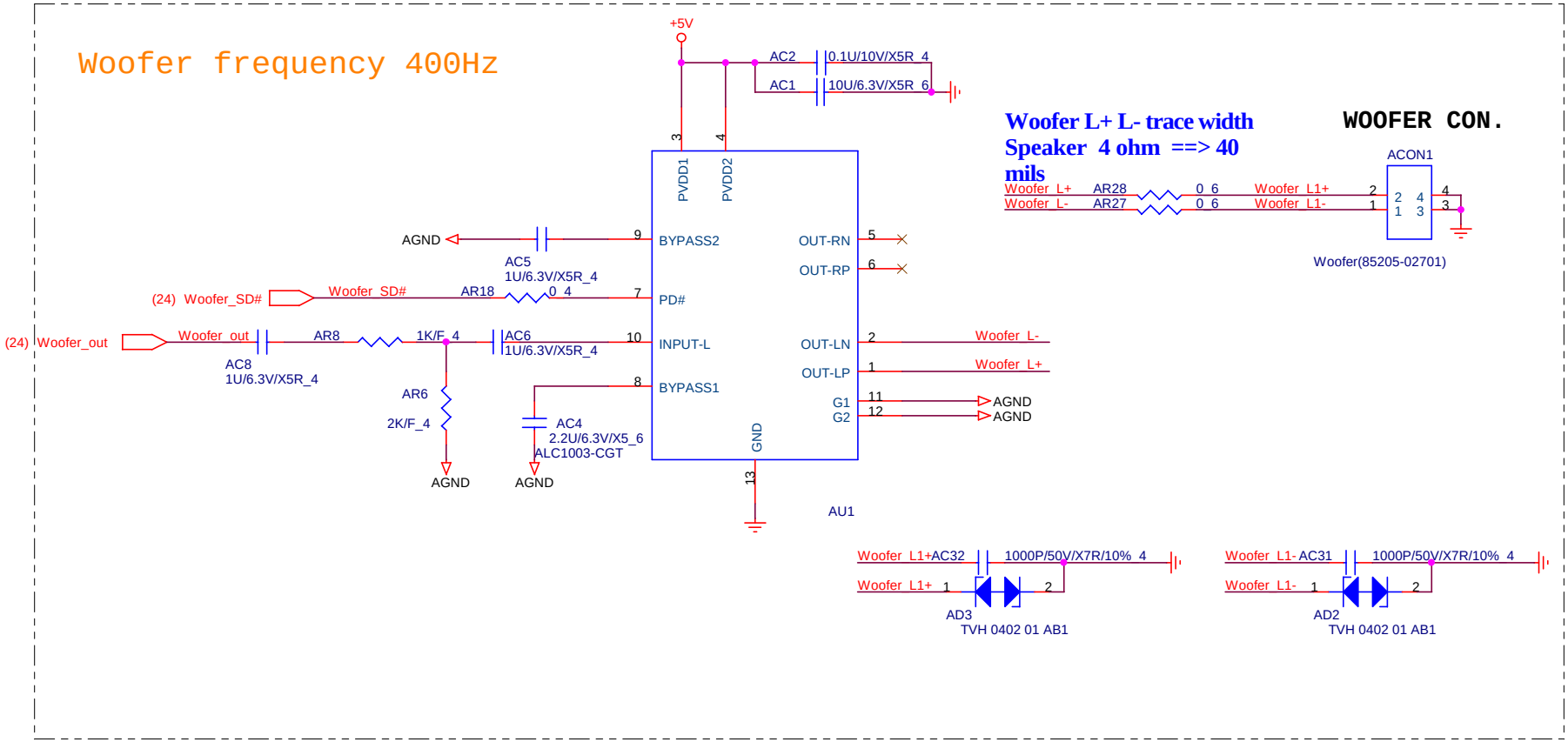

1.Level 1 Environment-related Substances Should Never be Used.
2.Recycled Resin and Coated Wire should be procured from Green Partners.

Quanta Computer Inc.

PROJECT : HKC

Size	Document Number	Rev
	Audio Codec Woofer	1A

Date: Thursday, January 24, 2013 Sheet 39 of 40

USB PORT Architecture	
PORT 0	USB3.0
PORT 1	USN3.0
PORT 2	USN2.0
PORT 3	USB2.0
PORT 4	NFC
PORT 5	N/A
PORT 6	N/A
PORT 7	N/A
PORT 8	N/A
PORT 9	WiMax/BT
PORT 10	Camera
PORT 11	Card Reader
PORT 12	Touch Screen
PORT 13	N/A

PCIE BUS	
PORT 1	WLAN Port
PORT 2	CARD READER
PORT 3	GLAN(RTL8111G)
PORT 4	N/A
PORT 5	N/A
PORT 6	N/A
PORT 7	N/A
PORT 8	N/A

SATA BUS	
PORT 0	HDD
PORT 1	N/A
PORT 2	N/A
PORT 3	N/A
PORT 4	ODD
PORT 5	N/A

SM BUS	MBCLK/MBDATA	WRITE	READ	Function
ISL88731CHRTZ	0001 001X	0001 0010	0001 0011	Charger
Nvidia	1001 1110	-	1001 1110	Graphice
LIS331DL	0011 101X	0011 1010	0011 1011	G Sensor

SM BUS	MBCLK_BAT/MBDATA_BAT	WRITE	READ	Function
VGP-BPS35A	0001 011X	0001 0110	0001 0111	Battery

SM BUS	SMB_PCH_CLK/SMB_PCH_DAT	WRITE	READ	Function
DIMM Module0	1010 000X	1010 0000	1010 0001	DDRIII
DIMM Module 1	1010 010X	1010 0100	1010 0101	DDRIII
Synaptics	0010 110X	0010 1100	0010 1101	Click PAD

	R363(High) R362(Low)	R294(High) R297(low)
	Board ID3	Board ID0
14"/HK6	0	0
15"/HK5	0	1
17"/HK7	1	0

Board ID1 (VRAM Vendor)	Samaung(1)	Hynix(0)
R47(High)	Stuff	No Stuff
R48(Low)	No Stuff	Stuff

Board ID2		
14" 4PCS	1G	512M
15" 8PCS	1G	2G
R39(High)	Stuff	No Stuff
R27(Low)	No Stuff	Stuff

PCBA SKU	Discrete	UMA
R277(Pull High)	Stuff	No Stuff
R275(Pull Low)	No Stuff	Stuff

OS status	S0	S3	DS3	(Soft OFF)	(Soft OFF)	(Soft OFF)	(Soft OFF)	(Soft OFF)
H/W status	S0	S3	DS3	S4 (Win8 off) RTC wake Enable WOLAN Enable	S4 (Win8 off) RTC wake Disable WOLAN Disable	S5 Charge Enable	S5 Charge Disable WoL Disable	S5 WoL Enable
RUN_ON	H	L	L	L	L	L	L	L
+3V	H	L	L	L	L	L	L	L
+5V	H	L	L	L	L	L	L	L
+0.675V_DDR_VTT	H	L	L	L	L	L	L	L
+1.05V	H	L	L	L	L	L	L	L
+0.85V	H	L	L	L	L	L	L	L
+1.5V	H	L	L	L	L	L	L	L
+3V_GPU	H	L	L	L	L	L	L	L
+1.05V_GPU	H	L	L	L	L	L	L	L
+VGPU_CORE	H	L	L	L	L	L	L	L
+VCC_CORE	H	L	L	L	L	L	L	L
SUS_ON	H	H	H	L	L	L	L	L
+1.35V_SUS	H	H	H	L	L	L	L	L
S5_ON	H	H	L	H	L	L	L	H
+5V_S5	H	H	L	H	L	L	L	H
+3V_S5	H	H	L	H	L	L	L	H
EC_WAKE_ON	H	H	H	H	L	H	L	H
+3V_WAKE	H	H	H	H	L	H	L	H
+5V_WAKE	H	H	H	H	L	H	L	H
DEEP_EC_EN	H	H	H	H	L	L	L	L
+3V_S5_DSW	H	H	H	H	L	L	L	L
+3V_SUS	H	H	L	L	L	L	L	L

WWW.AliSaler.Com