# Compal Confidential

# NIMUA/UB

## Schematics Document

## Arrandale

## with Intel IBEX PEAK-M core logic

REV:0.3

| | | | |
|---|---|---|---|
| Security Classification | Compal Secret Data | | |
| Issued Date | 2010/01/13 | Deciphered Date | 2011/01/13 |

THIS SHEET OF ENGINEERING DRAWING IS THE PROPRIETARY PROPERTY OF COMPAL ELECTRONICS, INC. AND CONTAINS CONFIDENTIAL AND TRADE SECRET INFORMATION. THIS SHEET MAY NOT BE TRANSFERED FROM THE CUSTODY OF THE COMPETENT DIVISION OF R&D DEPARTMENT EXCEPT AS AUTHORIZED BY COMPAL ELECTRONICS, INC. NEITHER THIS SHEET NOR THE INFORMATION IT CONTAINS MAY BE USED BY OR DISCLOSED TO ANY THIRD PARTY WITHOUT PRIOR WRITTEN CONSENT OF COMPAL ELECTRONICS, INC.

*Compal Electronics,Ltd.*

Title: **Cover Sheet**

| Size | Document Number | Rev |
|---|---|---|
| Custom | LA-5941P | 0.3 |

Date: Thursday, April 08, 2010 | Sheet 1 of 50

Compal confidential
File Name :

zzz
14.1W_PCB_LA5941P
DAZ0D500102

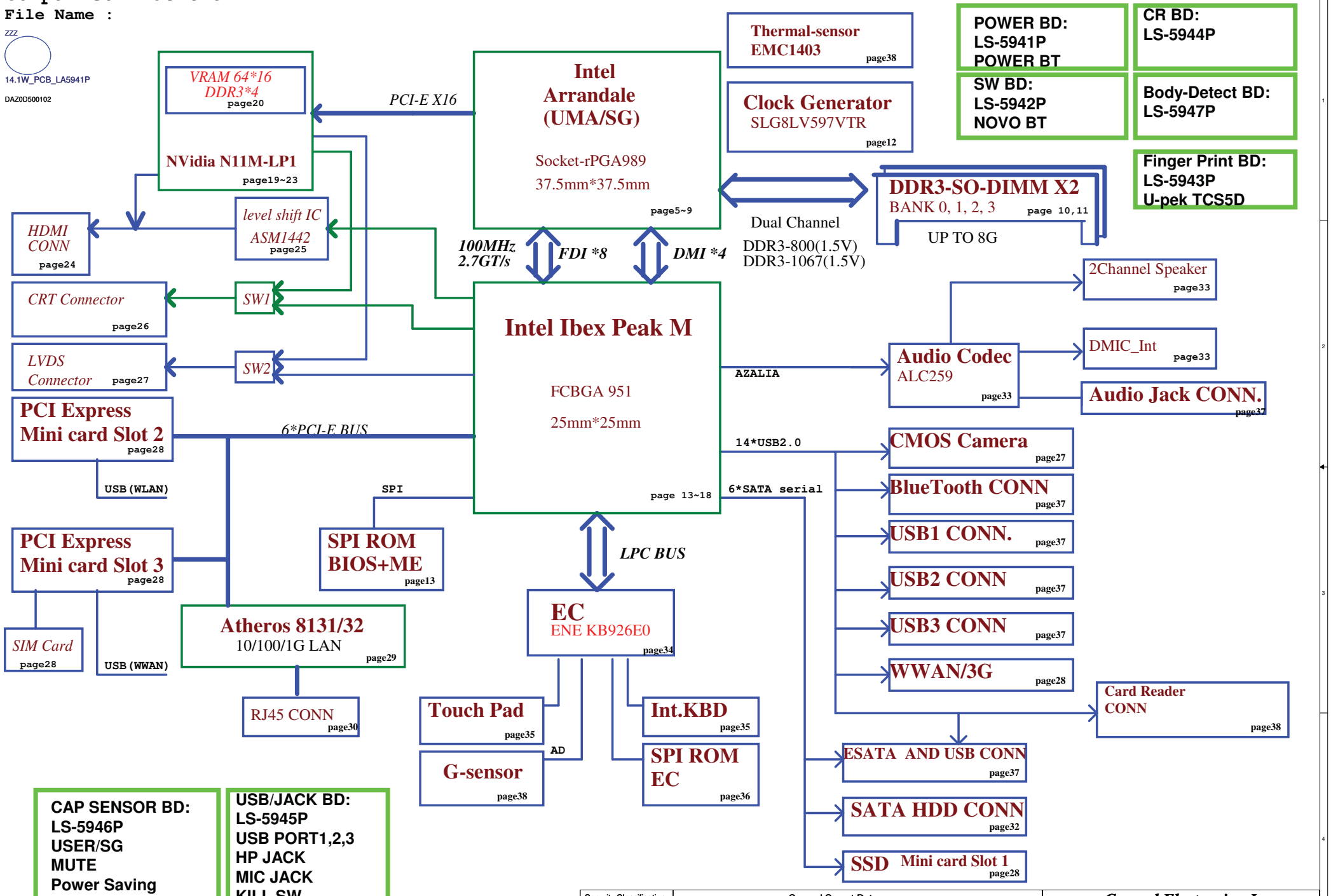


| Security Classification | Compal Secret Data | | |
|---|---|---|---|
| Issued Date | 2010/01/13 | Deciphered Date | 2011/01/13 |

THIS SHEET OF ENGINEERING DRAWING IS THE PROPRIETARY PROPERTY OF COMPAL ELECTRONICS, INC. AND CONTAINS CONFIDENTIAL AND TRADE SECRET INFORMATION. THIS SHEET MAY NOT BE TRANSFERED FROM THE CUSTODY OF THE COMPETENT DIVISION OF R&D DEPARTMENT EXCEPT AS AUTHORIZED BY COMPAL ELECTRONICS, INC. NEITHER THIS SHEET NOR THE INFORMATION IT CONTAINS MAY BE USED BY OR DISCLOSED TO ANY THIRD PARTY WITHOUT PRIOR WRITTEN CONSENT OF COMPAL ELECTRONICS, INC.

Compal Electronics, Inc.

Title: MB Block Diagram

Size: Custom | Document Number: LA-5941P | Rev: 0.3

Date: Thursday, April 08, 2010 | Sheet 2 of 50

WWW.AliSaler.Com

## DDR3 Voltage Rails

| power plane / State | +B | +5VALW<br>+3VALW | +1.5V | +5VS<br>+3VS<br>+1.5VS<br>+VCCP<br>+CPU_CORE<br>+VGA_CORE<br>+1.8VS<br>+0.75VS<br>+1.05VS<br>For SG<br>+3VS_DELAY<br>+1.8VS_VGA<br>+1.5VS_VGA |
|---|---|---|---|---|
| S0 | O | O | O | O |
| S3 | O | O | O | X |
| S5 S4/AC | O | O | X | X |
| S5 S4/ Battery only | O | X | X | X |
| S5 S4/AC & Battery don't exist | X | X | X | X |

## SMBUS Control Table

| | SOURCE | RAM M2 | BATT | KB926 | SODIMM | CLK CHIP | WLAN WWAN | N11x Thermal Sensor | EMC1403 | Cap sensor board | ALS | PCH |
|---|---|---|---|---|---|---|---|---|---|---|---|---|
| SMB_EC_CK1<br>SMB_EC_DA1 | KB926<br>+3VALW | X | V<br>+3VALW | X | X | X | X | X | X | X | X | X |
| SMB_EC_CK2<br>SMB_EC_DA2 | KB926<br>+3VALW | X | X | V<br>+3VALW | X | X | X | V<br>+3VS | V<br>+3VS | X | V<br>+3VS | V<br>+3VALW |
| SMBCLK<br>SMBDATA | PCH<br>+3VALW | V<br>+3VALW | X | X | V<br>+3VS | V<br>+3VS | X | X | X | X | X | X |
| SML0CLK<br>SML0DATA | PCH<br>+3VALW | X | X | X | X | X | X | X | X | X | X | X |
| SML1CLK<br>SML1DATA | PCH<br>+3VALW | X | X | V | X | X | X | X | X | X | X | X |

## PCH, I2C / SMBUS ADDRESSING

| DEVICE | HEX | ADDRESS |
|---|---|---|
| DDR SO-DIMM 0 | A0 | 1 0 1 0 0 0 0 0 |
| DDR SO-DIMM 1 | A4 | 1 0 1 0 0 1 0 0 |
| CLOCK GENERATOR (EXT.) | D2 | 1 1 0 1 0 0 1 0 |

## EC, I2C / SMBUS ADDRESSING

| DEVICE | HEX | ADDRESS | |
|---|---|---|---|
| PCH | 96/98,R/W | 1 0 0 1 0 1 1 X | 1 0 0 1 1 0 0 X |
| EMC1403 Thermal sensor | 9A | 1 0 0 1 1 0 1 X | |
| N-vidia Thermal sensor | 9E | 1 0 0 1 1 1 1 X | |
| ALS | 70/72,R/W | 0 1 1 1 0 0 0 X | 0 1 1 1 0 0 1 X |

## @ FUNCTION

| | PVT | NON-USE |
|---|---|---|
| 45@ | (45 BOM) | |
| 100@ | 10/100 LAN | |
| GIGA@ | GIGA LAN | |
| UMA_HDMI@ | FOR UMA HDMI components | |
| ~~HDMI@~~ | ~~FOR HDMI components~~ | |
| 3G@ | 3G(WWAN) function | |
| X76@ | (X76 BOM) | |
| ~~ESATA@~~ | ~~ESATA function~~ | |
| CMOS@ | Camera function | |
| SSD@ | SSD w/ miniPCIE socket | |
| ~~10M@~~ | ~~FOR 10M CHIP~~ | |
| ~~11M@~~ | ~~FOR 11M CHIP~~ | |
| UMA@ | UMA only (Arranddale) | |
| ~~DIS@~~ | ~~DIS only (Arranddale)~~ | |
| ~~VGA@~~ | ~~FOR NVIDIA PART~~ | |
| HYBRID@ | FOR SWITCHABLE | |
| HU@ | SWITCHABLE or UMA only | |
| HD@ | SWITCHABLE or DIS only | |

## SKU

| | |
|---|---|
| Arrandale(dGPU)<br>~~DIS only~~ | DIS@ / 100@ ~~for EVT~~ |
| Arrandale(iGPU)<br>UMA only | UMA@ / ~~100@ for EVT~~ |
| Arrandale(iGPU+dGPU)<br>SWITCHABLE | HYBRID@ |

## PCIE PORT LIST

| PORT | DEVICE |
|---|---|
| 1 | ~~NEW CARD~~ |
| 2 | WLAN |
| 3 | LAN |
| 4 | 3G |
| 5 | |
| 6 | |
| 7 | |
| 8 | |

## SATA PORT LIST

| PORT | DEVICE |
|---|---|
| 0 | HDD |
| 1 | SSD |
| 2,3 | HM55 disabled |
| 4 | E-SATA |
| 5 | |

## USB PORT LIST

| PORT | DEVICE |
|---|---|
| 0 | USB 1 |
| 1 | USB/ESATA |
| 2 | CMOS |
| 3 | USB 2 |
| 4 | |
| 5 | CARD READER |
| 6 | X HM55 disabled |
| 7 | X HM55 disabled |
| 8 | WIRELESS |
| 9 | USB 3 |
| 10 | FigerPrinter |
| 11 | BT |
| 12 | |
| 13 | 3G |

## VGA and DDR3 Voltage Rails (N11M GPIO)

| GPIO | I/O | ACTIVE | Function Description |
|---|---|---|---|
| GPIO0 | N/A | N/A | |
| GPIO1 | IN | - | HDMI_DETECT_VGA |
| GPIO2 | OUT | H | NV_INVTPWM |
| GPIO3 | OUT | H | VGA_ENVDD_R |
| GPIO4 | OUT | H | VGA_ENABLT |
| GPIO5 | OUT | - | GPU VID0 |
| GPIO6 | OUT | - | GPU VID1 |
| GPIO7 | OUT | - | |
| GPIO8 | I/O | L | |
| GPIO9 | OUT | L | |
| GPIO10 | OUT | | |
| GPIO11 | I/O | L | |
| GPIO12 | IN | - | |
| GPIO13 | OUT | - | |
| GPIO14 | OUT | - | |
| GPIO15 | IN | - | |
| GPIO16 | OUT | - | |
| GPIO17 | IN | - | |
| GPIO18 | IN | - | |
| GPIO19 | IN | - | |
| GPIO20 | IN | - | |
| GPIO21 | IN | - | |
| GPIO22 | IN | - | |
| GPIO23 | I/O | | |

### Power Sequence

The ramp time for any rail must be more than 40us

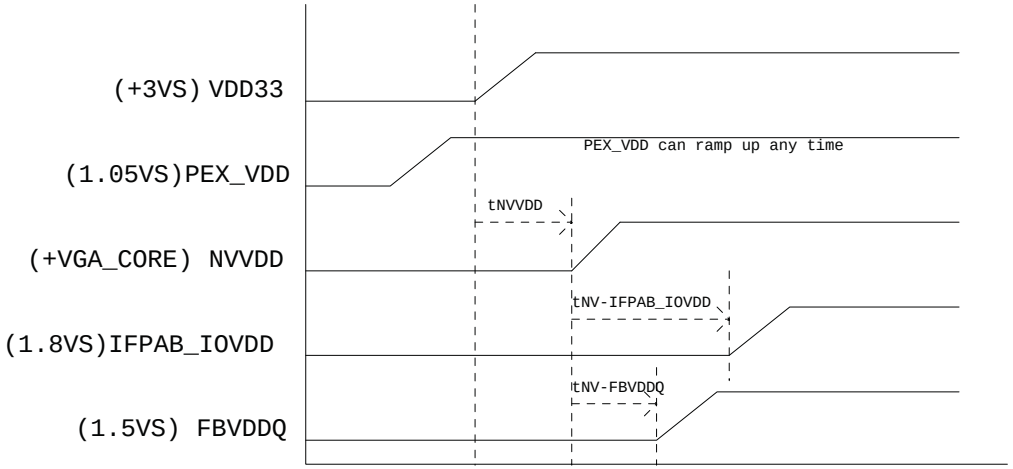


| | Device ID |
|---|---|
| N11M-LP1 (40nm) | 0x0A6E |

GPIO5 GPIO6

| GPU_VID0 | GPU_VID1 | VGA_CORE | P-State |
|---|---|---|---|
| 0 | 0 | 0.8V | Deep P12 |
| 0 | 1 | 0.85V | P8 |
| 1 | 1 | 0.86V | P0 |

WWW.AliSaler.Com



THIS SHEET OF ENGINEERING DRAWING IS THE PROPRIETARY PROPERTY OF COMPAL ELECTRONICS, INC. AND CONTAINS CONFIDENTIAL AND TRADE SECRET INFORMATION. THIS SHEET MAY NOT BE TRANSFERED FROM THE CUSTODY OF THE COMPETENT DIVISION OF R&D DEPARTMENT EXCEPT AS AUTHORIZED BY COMPAL ELECTRONICS, INC. NEITHER THIS SHEET NOR THE INFORMATION IT CONTAINS MAY BE USED BY OR DISCLOSED TO ANY THIRD PARTY WITHOUT PRIOR WRITTEN CONSENT OF COMPAL ELECTRONICS, INC.

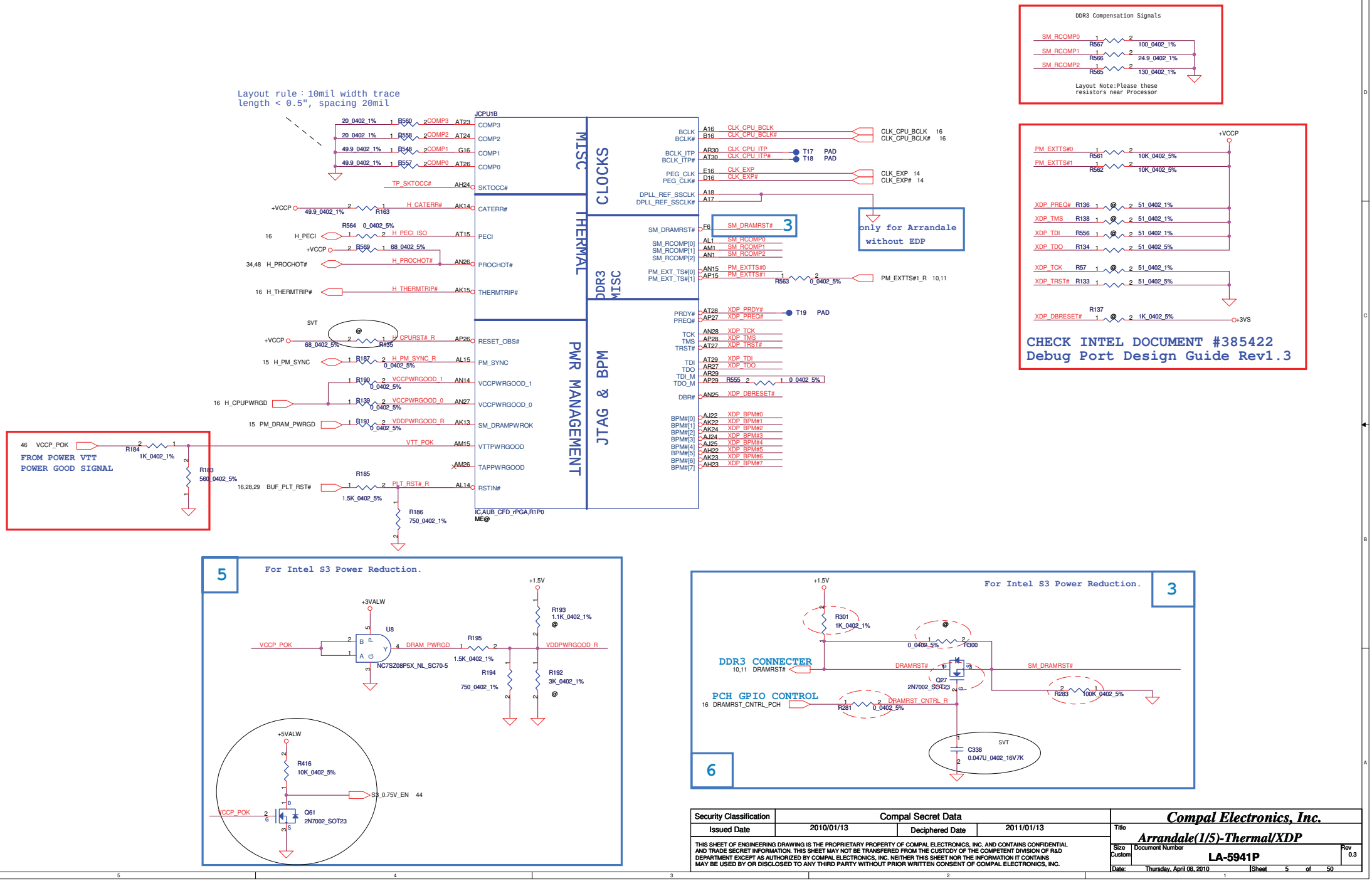


| Security Classification | Compal Secret Data | | |
|---|---|---|---|
| Issued Date | 2010/01/13 | Deciphered Date | 2011/01/13 |

THIS SHEET OF ENGINEERING DRAWING IS THE PROPRIETARY PROPERTY OF COMPAL ELECTRONICS, INC. AND CONTAINS CONFIDENTIAL AND TRADE SECRET INFORMATION. THIS SHEET MAY NOT BE TRANSFERED FROM THE CUSTODY OF THE COMPETENT DIVISION OF R&D DEPARTMENT EXCEPT AS AUTHORIZED BY COMPAL ELECTRONICS, INC. NEITHER THIS SHEET NOR THE INFORMATION IT CONTAINS MAY BE USED BY OR DISCLOSED TO ANY THIRD PARTY WITHOUT PRIOR WRITTEN CONSENT OF COMPAL ELECTRONICS, INC.

**Compal Electronics, Inc.**

Title: *Arrandale(1/5)-Thermal/XDP*

Size: Custom | Document Number: LA-5941P | Rev: 0.3

Date: Thursday, April 08, 2010 | Sheet 5 of 50

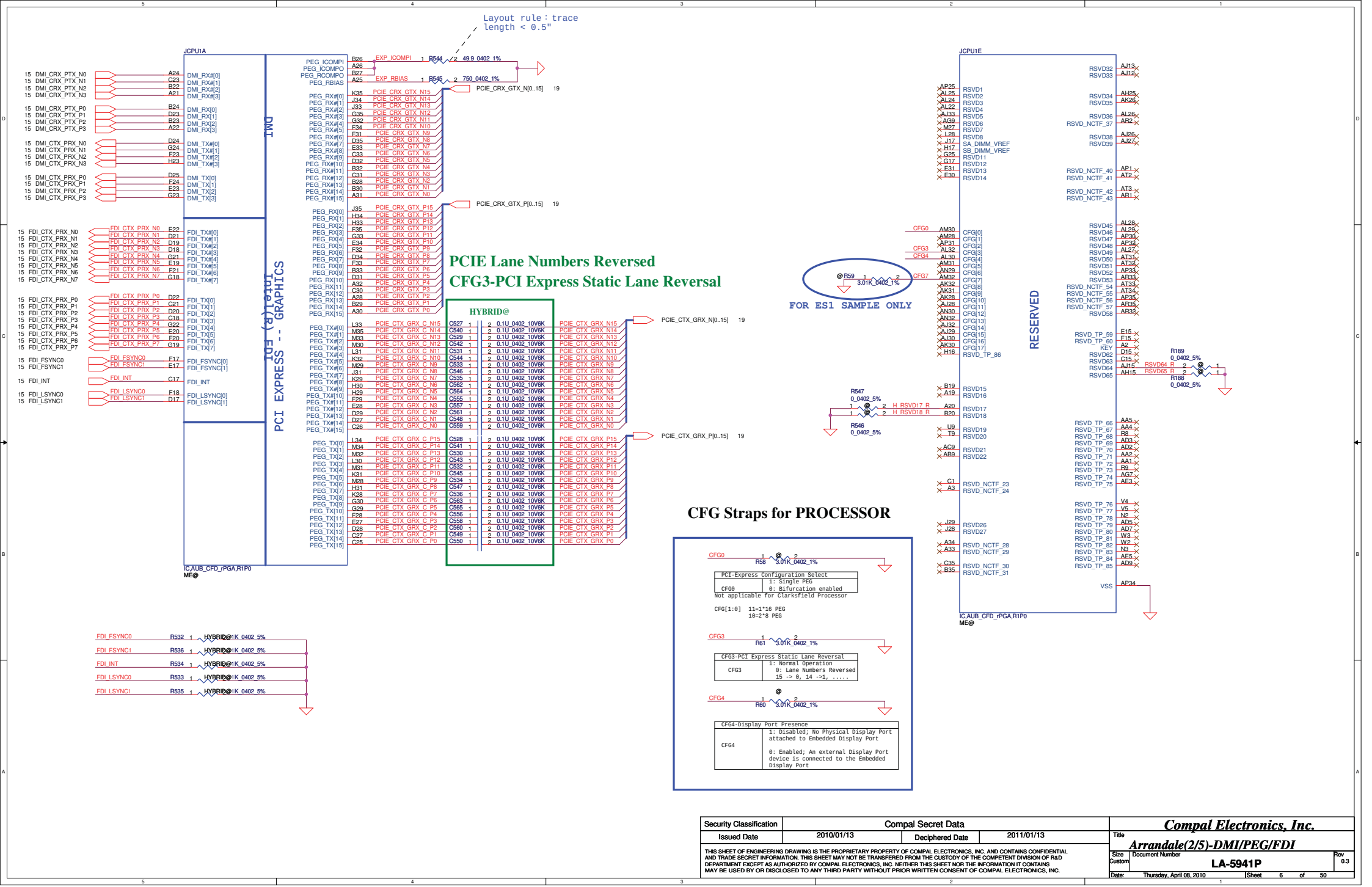


## CFG Straps for PROCESSOR

CFG0 — R58 3.01K_0402_1%

| PCI-Express Configuration Select | |
|---|---|
| CFG0 | 1: Single PEG<br>0: Bifurcation enabled |

Not applicable for Clarksfield Processor

CFG[1:0] 11=1*16 PEG
10=2*8 PEG

CFG3 — R61 3.01K_0402_1%

| CFG3-PCI Express Static Lane Reversal | |
|---|---|
| CFG3 | 1: Normal Operation<br>0: Lane Numbers Reversed<br>15 -> 0, 14 ->1, ..... |

CFG4 — R60 3.01K_0402_1%

| CFG4-Display Port Presence | |
|---|---|
| CFG4 | 1: Disabled; No Physical Display Port attached to Embedded Display Port<br><br>0: Enabled; An external Display Port device is connected to the Embedded Display Port |

| | | | |
|---|---|---|---|
| Security Classification | Compal Secret Data | | |
| Issued Date | 2010/01/13 | Deciphered Date | 2011/01/13 |

THIS SHEET OF ENGINEERING DRAWING IS THE PROPRIETARY PROPERTY OF COMPAL ELECTRONICS, INC. AND CONTAINS CONFIDENTIAL AND TRADE SECRET INFORMATION. THIS SHEET MAY NOT BE TRANSFERED FROM THE CUSTODY OF THE COMPETENT DIVISION OF R&D DEPARTMENT EXCEPT AS AUTHORIZED BY COMPAL ELECTRONICS, INC. NEITHER THIS SHEET NOR THE INFORMATION IT CONTAINS MAY BE USED BY OR DISCLOSED TO ANY THIRD PARTY WITHOUT PRIOR WRITTEN CONSENT OF COMPAL ELECTRONICS, INC.

**Compal Electronics, Inc.**

Title: *Arrandale(2/5)-DMI/PEG/FDI*

Size: Custom | Document Number: LA-5941P | Rev: 0.3

Date: Thursday, April 08, 2010 | Sheet 6 of 50

WWW.AliSaler.Com

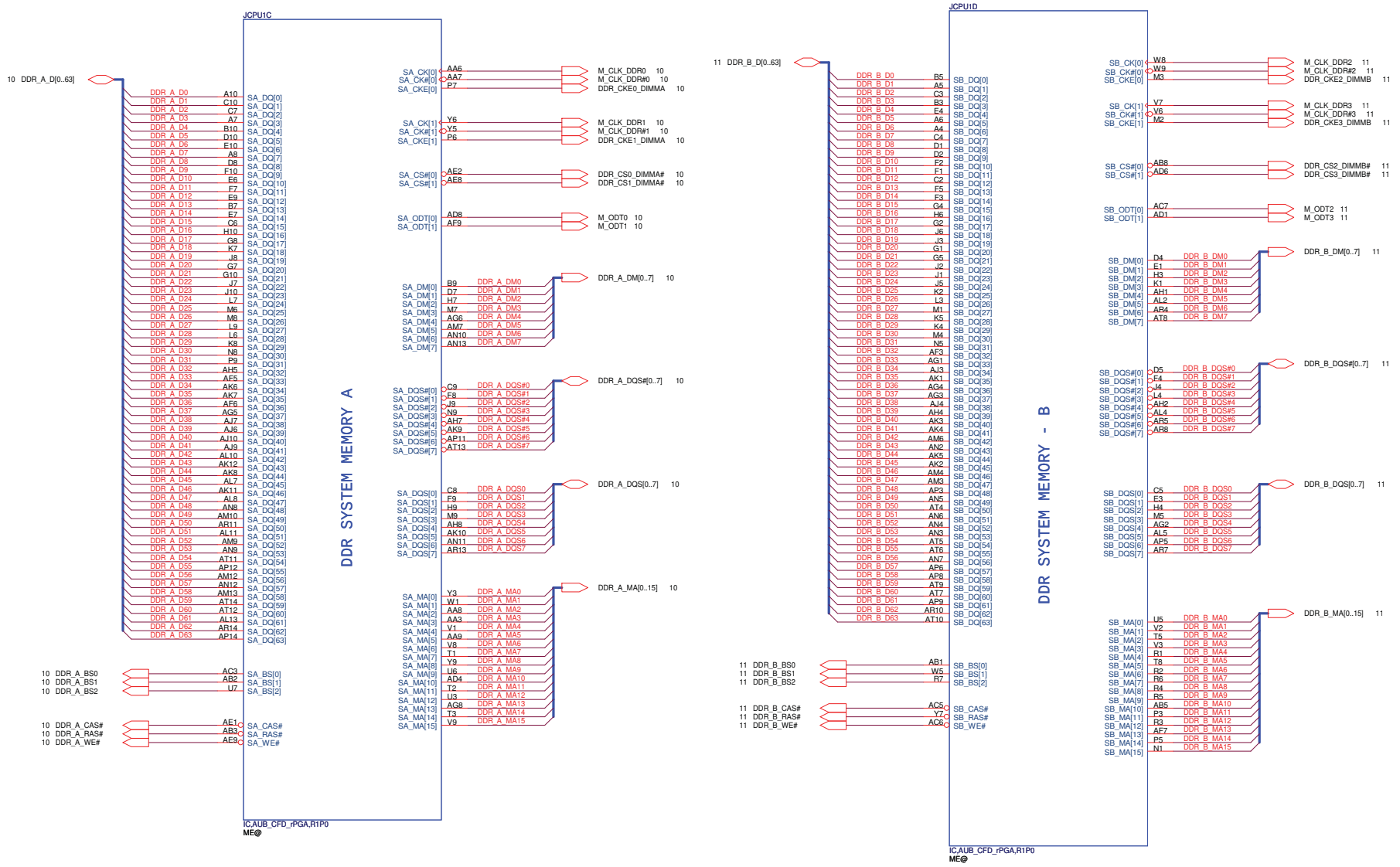


| Security Classification | Compal Secret Data | | |
|---|---|---|---|
| Issued Date | 2010/01/13 | Deciphered Date | 2011/01/13 |

THIS SHEET OF ENGINEERING DRAWING IS THE PROPRIETARY PROPERTY OF COMPAL ELECTRONICS, INC. AND CONTAINS CONFIDENTIAL AND TRADE SECRET INFORMATION. THIS SHEET MAY NOT BE TRANSFERED FROM THE CUSTODY OF THE COMPETENT DIVISION OF R&D DEPARTMENT EXCEPT AS AUTHORIZED BY COMPAL ELECTRONICS, INC. NEITHER THIS SHEET NOR THE INFORMATION IT CONTAINS MAY BE USED BY OR DISCLOSED TO ANY THIRD PARTY WITHOUT PRIOR WRITTEN CONSENT OF COMPAL ELECTRONICS, INC.

**Compal Electronics, Inc.**

Title: *Arrandale(3/5)-DDR III*

Size: Custom | Document Number: LA-5941P | Rev: 0.3

Date: Thursday, April 08, 2010 | Sheet 7 of 50

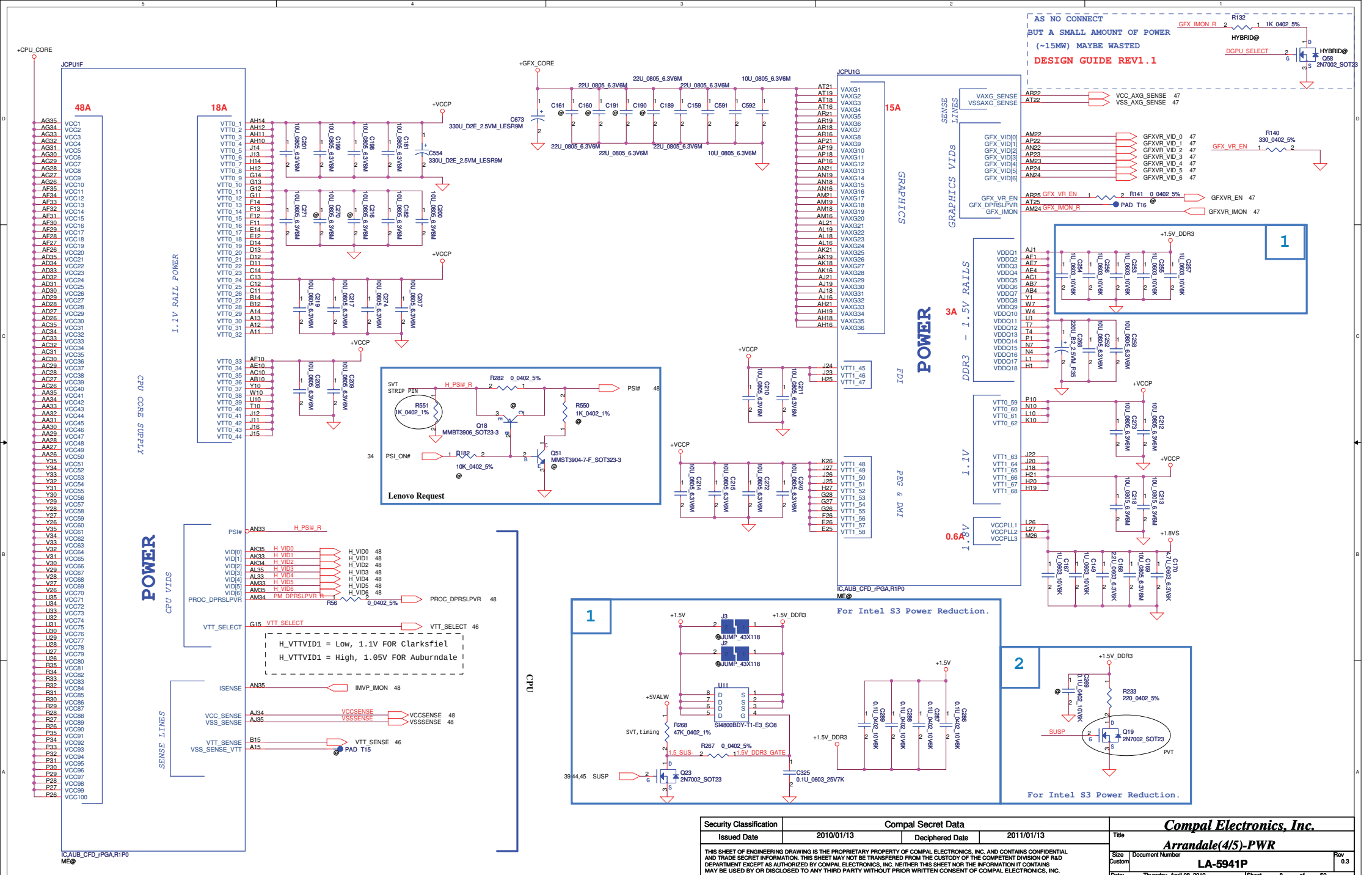


WWW.AliSaler.Com

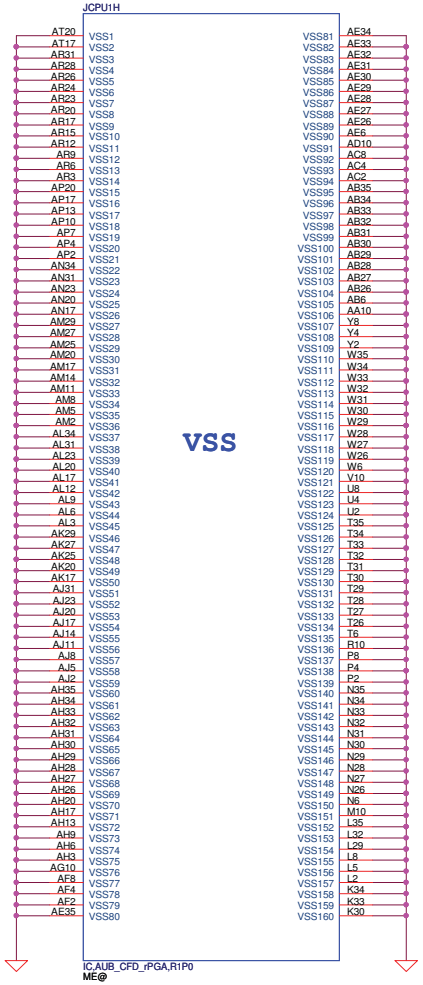


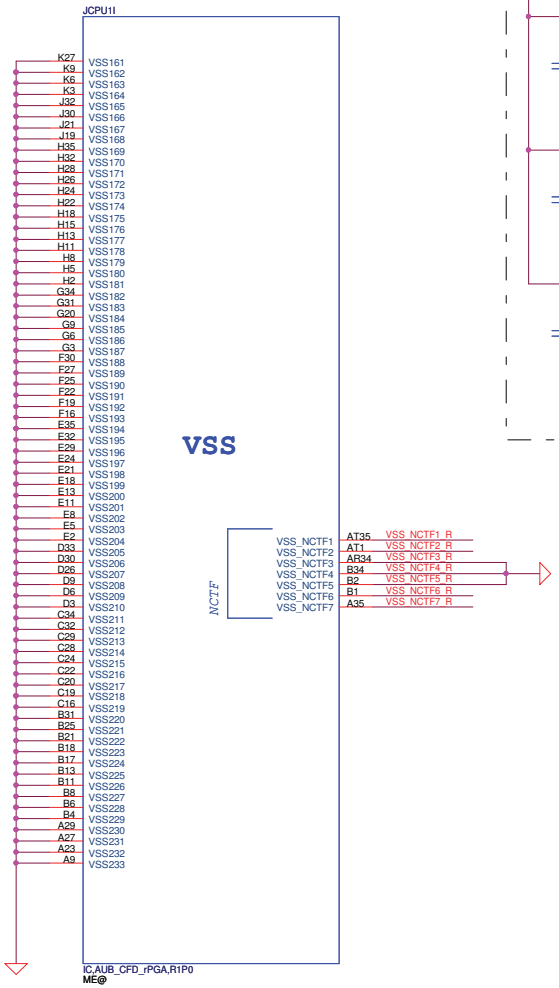


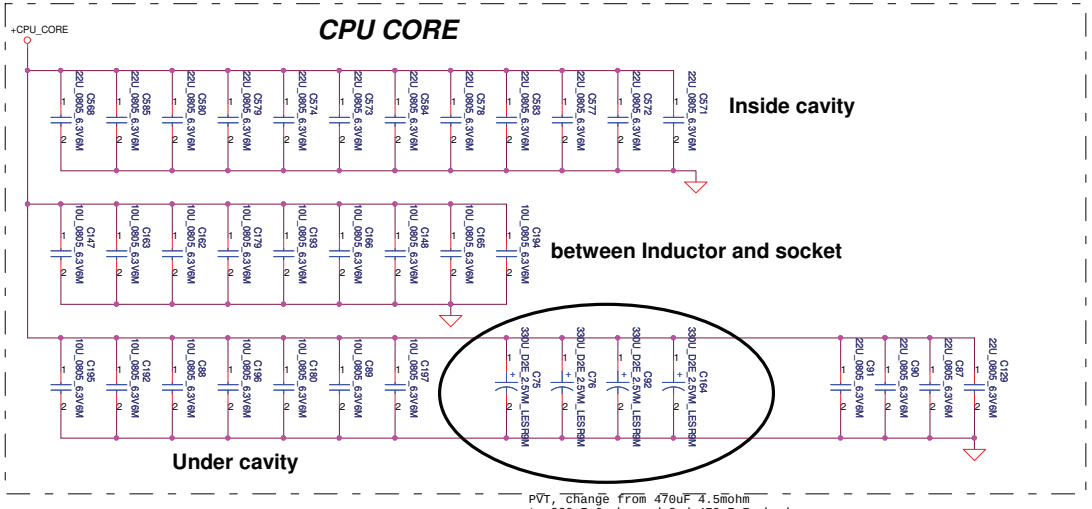


PVT, change from 470uF 4.5mohm
to 330uF 6mohm and 2nd 470uF 7mohm by power;
'10 1/8 update main to 330uF 9m ohm

| Security Classification | Compal Secret Data | | |
|---|---|---|---|
| Issued Date | 2010/01/13 | Deciphered Date | 2011/01/13 |

THIS SHEET OF ENGINEERING DRAWING IS THE PROPRIETARY PROPERTY OF COMPAL ELECTRONICS, INC. AND CONTAINS CONFIDENTIAL AND TRADE SECRET INFORMATION. THIS SHEET MAY NOT BE TRANSFERED FROM THE CUSTODY OF THE COMPETENT DIVISION OF R&D DEPARTMENT EXCEPT AS AUTHORIZED BY COMPAL ELECTRONICS, INC. NEITHER THIS SHEET NOR THE INFORMATION IT CONTAINS MAY BE USED BY OR DISCLOSED TO ANY THIRD PARTY WITHOUT PRIOR WRITTEN CONSENT OF COMPAL ELECTRONICS, INC.

**Compal Electronics, Inc.**

Title: *Arrandale(5/5)-GND/Bypass*

Size: Custom | Document Number: LA-5941P | Rev: 0.3

Date: Thursday, April 08, 2010 | Sheet 9 of 50

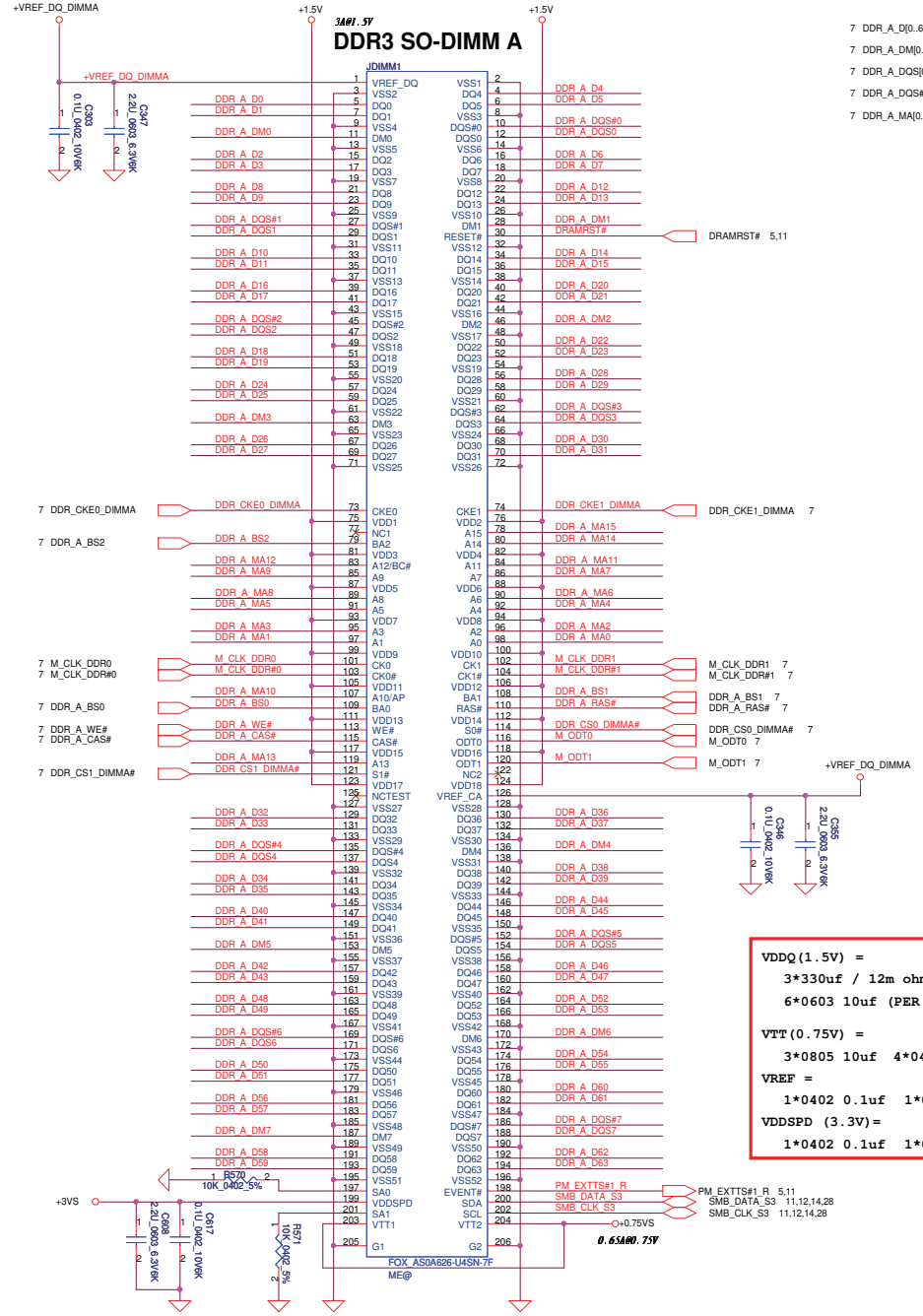


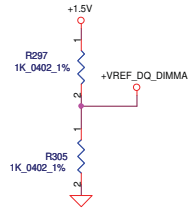


For Arranale only +VREF_DQ_DIMMA supply from a external 1.5V voltage divide circuit.

07/17/2009

Layout Note:
Place near DIMM

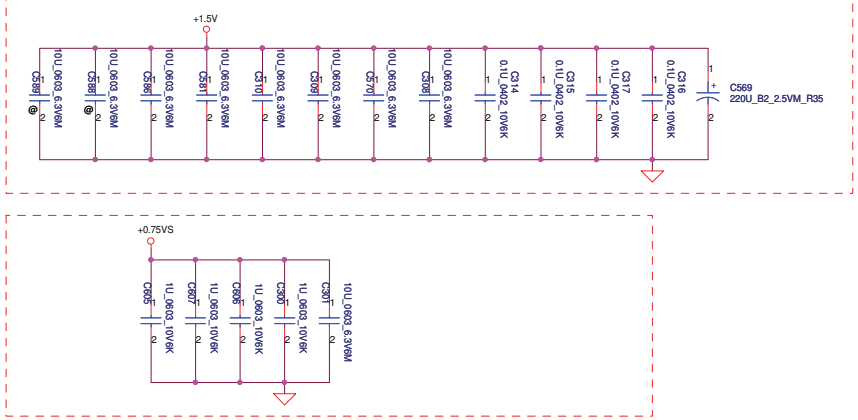


```
VDDQ(1.5V) =
  3*330uf / 12m ohm (TOTAL FOR 2 SO-DIMMs)
  6*0603 10uf (PER CONNECTOR)

VTT(0.75V) =
  3*0805 10uf  4*0402 1uf
VREF =
  1*0402 0.1uf  1*0402 2.2uf
VDDSPD (3.3V)=
  1*0402 0.1uf  1*0402 2.2uf
```

| Security Classification | Compal Secret Data | | |
|---|---|---|---|
| Issued Date | 2010/01/13 | Deciphered Date | 2011/01/13 |

THIS SHEET OF ENGINEERING DRAWING IS THE PROPRIETARY PROPERTY OF COMPAL ELECTRONICS, INC. AND CONTAINS CONFIDENTIAL AND TRADE SECRET INFORMATION. THIS SHEET MAY NOT BE TRANSFERED FROM THE CUSTODY OF THE COMPETENT DIVISION OF R&D DEPARTMENT EXCEPT AS AUTHORIZED BY COMPAL ELECTRONICS, INC. NEITHER THIS SHEET NOR THE INFORMATION IT CONTAINS MAY BE USED BY OR DISCLOSED TO ANY THIRD PARTY WITHOUT PRIOR WRITTEN CONSENT OF COMPAL ELECTRONICS, INC.

Compal Electronics, Inc.

Title: DDRIII-SODIMM SLOT1

Size: Custom | Document Number: LA-5941P | Rev: 0.3

Date: Thursday, April 08, 2010 | Sheet 10 of 50

WWW.AliSaler.Com

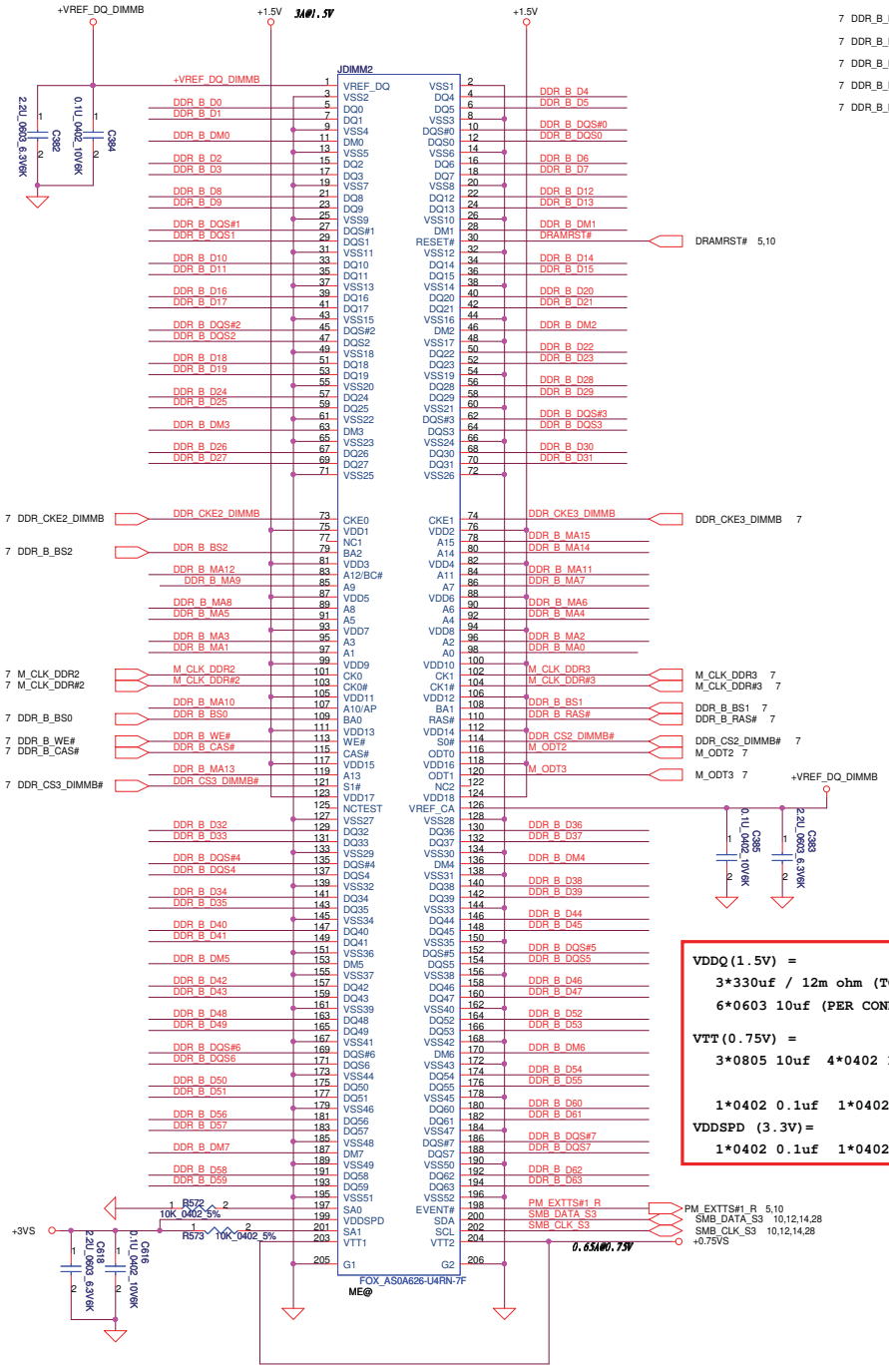


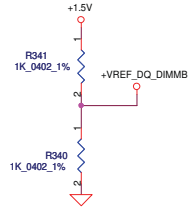


**For Arranale only +VREF_DQ_DIMMB supply from a external 1.5V voltage divide circuit.**

**07/17/2009**

**Layout Note:**
**Place near DIMM**

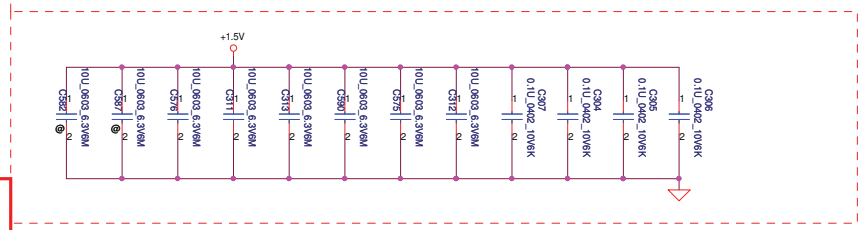


**Layout Note:**
**Place near DIMM**

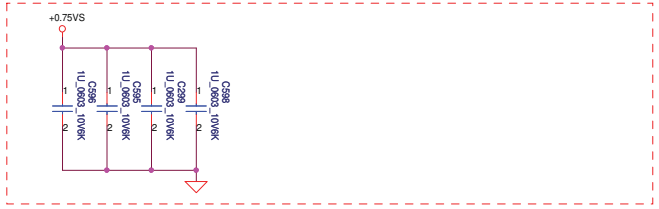


```
VDDQ(1.5V) =
  3*330uf / 12m ohm (TOTAL FOR 2 SO-DIMMs)
  6*0603 10uf (PER CONNECTOR)

VTT(0.75V) =
  3*0805 10uf  4*0402 1uf

  1*0402 0.1uf  1*0402 2.2uf
VDDSPD (3.3V)=
  1*0402 0.1uf  1*0402 2.2uf
```

| Security Classification | Compal Secret Data | | |
|---|---|---|---|
| Issued Date | 2010/01/13 | Deciphered Date | 2011/01/13 |

THIS SHEET OF ENGINEERING DRAWING IS THE PROPRIETARY PROPERTY OF COMPAL ELECTRONICS, INC. AND CONTAINS CONFIDENTIAL AND TRADE SECRET INFORMATION. THIS SHEET MAY NOT BE TRANSFERED FROM THE CUSTODY OF THE COMPETENT DIVISION OF R&D DEPARTMENT EXCEPT AS AUTHORIZED BY COMPAL ELECTRONICS, INC. NEITHER THIS SHEET NOR THE INFORMATION IT CONTAINS MAY BE USED BY OR DISCLOSED TO ANY THIRD PARTY WITHOUT PRIOR WRITTEN CONSENT OF COMPAL ELECTRONICS, INC.

**Compal Electronics, Inc.**

Title: **DDRIII-SODIMM SLOT2**

Size | Document Number: **LA-5941P** | Rev: 0.3

Date: Thursday, April 08, 2010 | Sheet 11 of 50

Reserve for Low Power CLK GEN.
RTM890N-632
SLG8LV597VTR

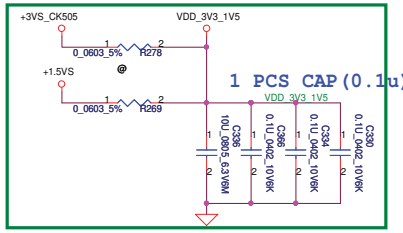


**CLK GEN TO PCH**
1. CLK_DMI
2. CLK_BUF_BCLK
3. CLK_BUF_CKSSCD
4. CLK_BUF_DOT96
5. CLK_14M_PCH

**CLK GEN TO VGA**
1. 27M_CLK
1. 27M_CLK_SS

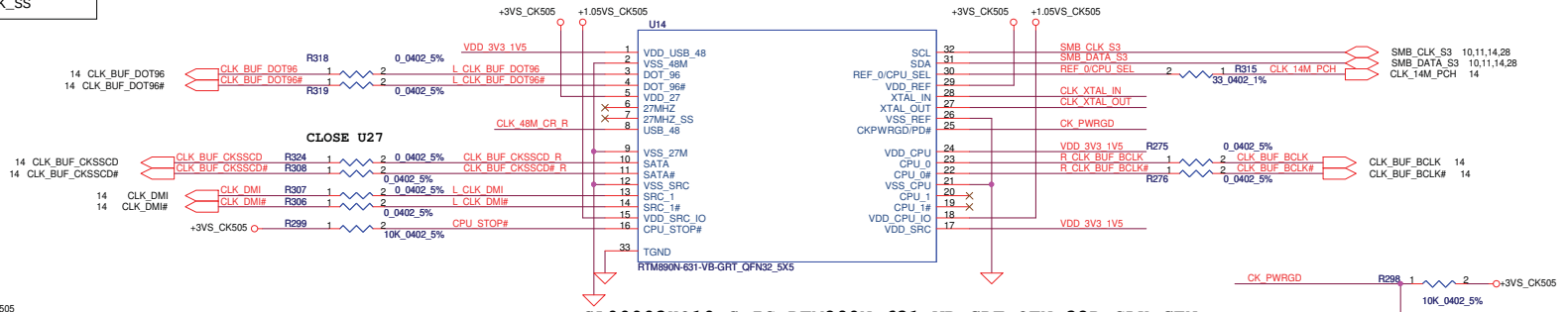


**SA00003HQ10 S IC RTM890N-631-VB-GRT QFN 32P CLK GEN**
**(SA00003HR00)S IC ICS9LVS3199AKLFT MLF 32P CLK GEN**
**~~S IC SLG8SP587VTR QFN 32P CLK GEN (SA00002XY00)~~**

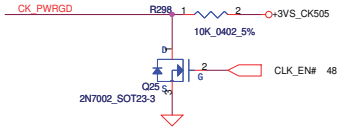


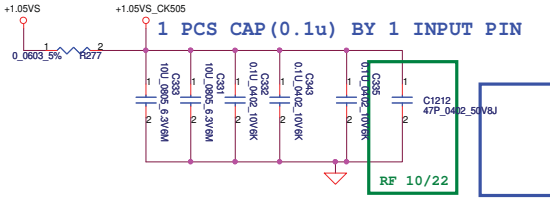


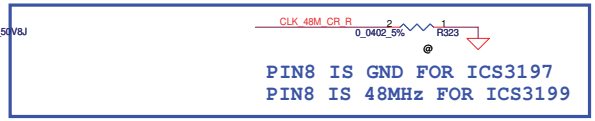


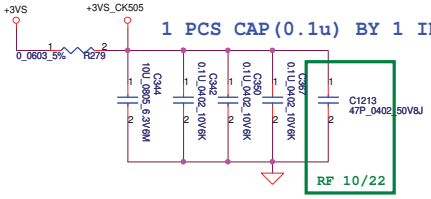


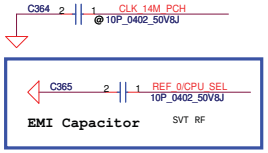


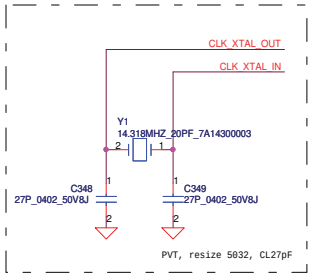


| PIN 30 | CPU_0 | CPU_1 |
|---|---|---|
| 0 (Default) | 133MHz | 133MHz |
| 1 | 100MHz | 100MHz |

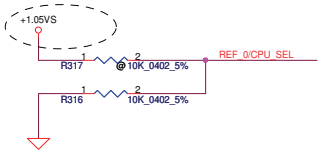


| Security Classification | Compal Secret Data | | |
|---|---|---|---|
| Issued Date | 2010/01/13 | Deciphered Date | 2011/01/13 |

THIS SHEET OF ENGINEERING DRAWING IS THE PROPRIETARY PROPERTY OF COMPAL ELECTRONICS, INC. AND CONTAINS CONFIDENTIAL AND TRADE SECRET INFORMATION. THIS SHEET MAY NOT BE TRANSFERED FROM THE CUSTODY OF THE COMPETENT DIVISION OF R&D DEPARTMENT EXCEPT AS AUTHORIZED BY COMPAL ELECTRONICS, INC. NEITHER THIS SHEET NOR THE INFORMATION IT CONTAINS MAY BE USED BY OR DISCLOSED TO ANY THIRD PARTY WITHOUT PRIOR WRITTEN CONSENT OF COMPAL ELECTRONICS, INC.

Compal Electronics, Inc.

Title: CLOCK GENERATOR

Size: | Document Number: LA-5941P | Rev: 0.3

Date: Thursday, April 08, 2010 | Sheet 12 of 50

WWW.AliSaler.Com

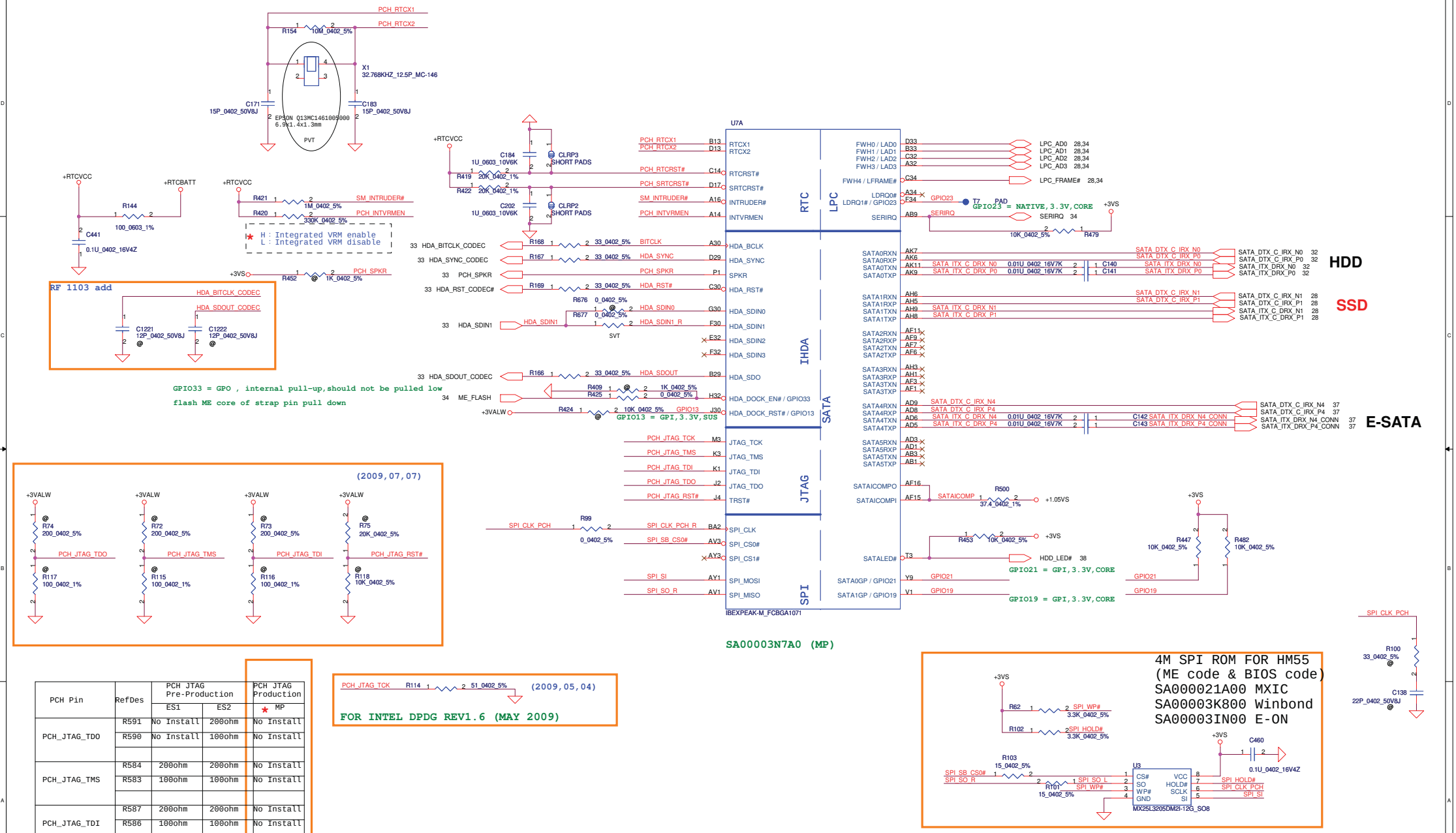


| PCH Pin | RefDes | PCH JTAG Pre-Production ES1 | PCH JTAG Pre-Production ES2 | PCH JTAG Production * MP |
|---|---|---|---|---|
| PCH_JTAG_TDO | R591 | No Install | 200ohm | No Install |
| | R590 | No Install | 100ohm | No Install |
| PCH_JTAG_TMS | R584 | 200ohm | 200ohm | No Install |
| | R583 | 100ohm | 100ohm | No Install |
| PCH_JTAG_TDI | R587 | 200ohm | 200ohm | No Install |
| | R586 | 100ohm | 100ohm | No Install |
| PCH_JTAG_TCK | R580 | 51ohm | 51ohm | 51ohm |
| PCH_JTAG_RST# | R595 | 20Kohm | 20Kohm | No Install |
| | R594 | 10Kohm | 10Kohm | No Install |

| Security Classification | Compal Secret Data | | |
|---|---|---|---|
| Issued Date | 2010/01/13 | Deciphered Date | 2011/01/13 |

THIS SHEET OF ENGINEERING DRAWING IS THE PROPRIETARY PROPERTY OF COMPAL ELECTRONICS, INC. AND CONTAINS CONFIDENTIAL AND TRADE SECRET INFORMATION. THIS SHEET MAY NOT BE TRANSFERED FROM THE CUSTODY OF THE COMPETENT DIVISION OF R&D DEPARTMENT EXCEPT AS AUTHORIZED BY COMPAL ELECTRONICS, INC. NEITHER THIS SHEET NOR THE INFORMATION IT CONTAINS MAY BE USED BY OR DISCLOSED TO ANY THIRD PARTY WITHOUT PRIOR WRITTEN CONSENT OF COMPAL ELECTRONICS, INC.

**Compal Electronics, Inc.**

Title: **IBEX-M(1/6)-HDA/JTAG/SATA**

Size: Custom | Document Number: **LA-5941P** | Rev: 0.3

Date: Thursday, April 08, 2010 | Sheet 13 of 50

## PCIE PORT LIST

| PORT | DEVICE |
|---|---|
| 1 | ~~NEW CARD~~ |
| 2 | WLAN |
| 3 | LAN |
| 4 | 3G |
| 5 | X |
| 6 | X |
| 7 | X |
| 8 | X |

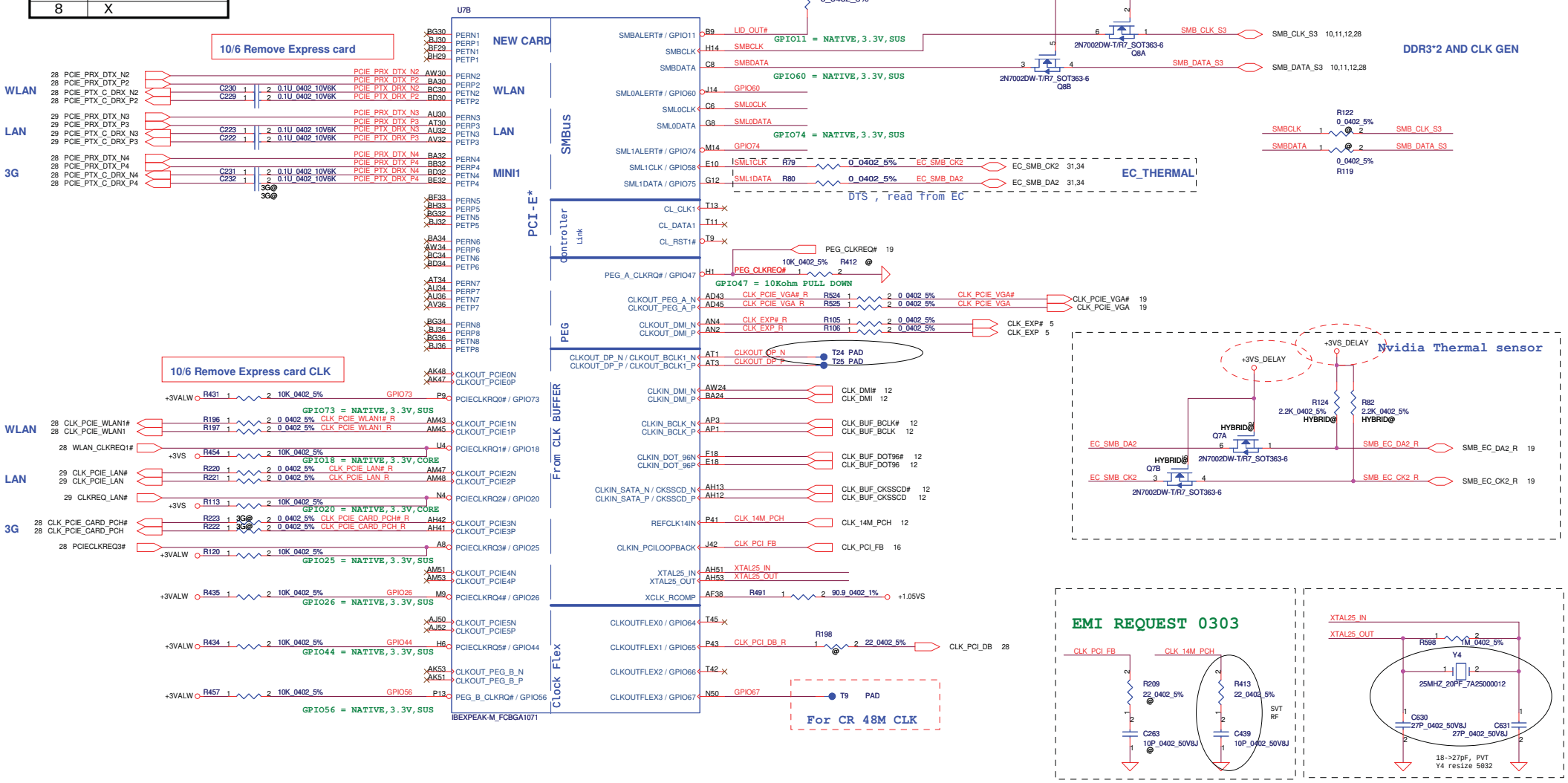


| Security Classification | Compal Secret Data | | |
|---|---|---|---|
| Issued Date | 2010/01/13 | Deciphered Date | 2011/01/13 |

THIS SHEET OF ENGINEERING DRAWING IS THE PROPRIETARY PROPERTY OF COMPAL ELECTRONICS, INC. AND CONTAINS CONFIDENTIAL AND TRADE SECRET INFORMATION. THIS SHEET MAY NOT BE TRANSFERED FROM THE CUSTODY OF THE COMPETENT DIVISION OF R&D DEPARTMENT EXCEPT AS AUTHORIZED BY COMPAL ELECTRONICS, INC. NEITHER THIS SHEET NOR THE INFORMATION IT CONTAINS MAY BE USED BY OR DISCLOSED TO ANY THIRD PARTY WITHOUT PRIOR WRITTEN CONSENT OF COMPAL ELECTRONICS, INC.

**Compal Electronics, Inc.**

Title: **IBEX-M(2/6)-PCI-E/SMBUS/CLK**

Size: Custom | Document Number: **LA-5941P** | Rev: 0.3

Date: Thursday, April 08, 2010 | Sheet 14 of 50

WWW.AliSaler.Com

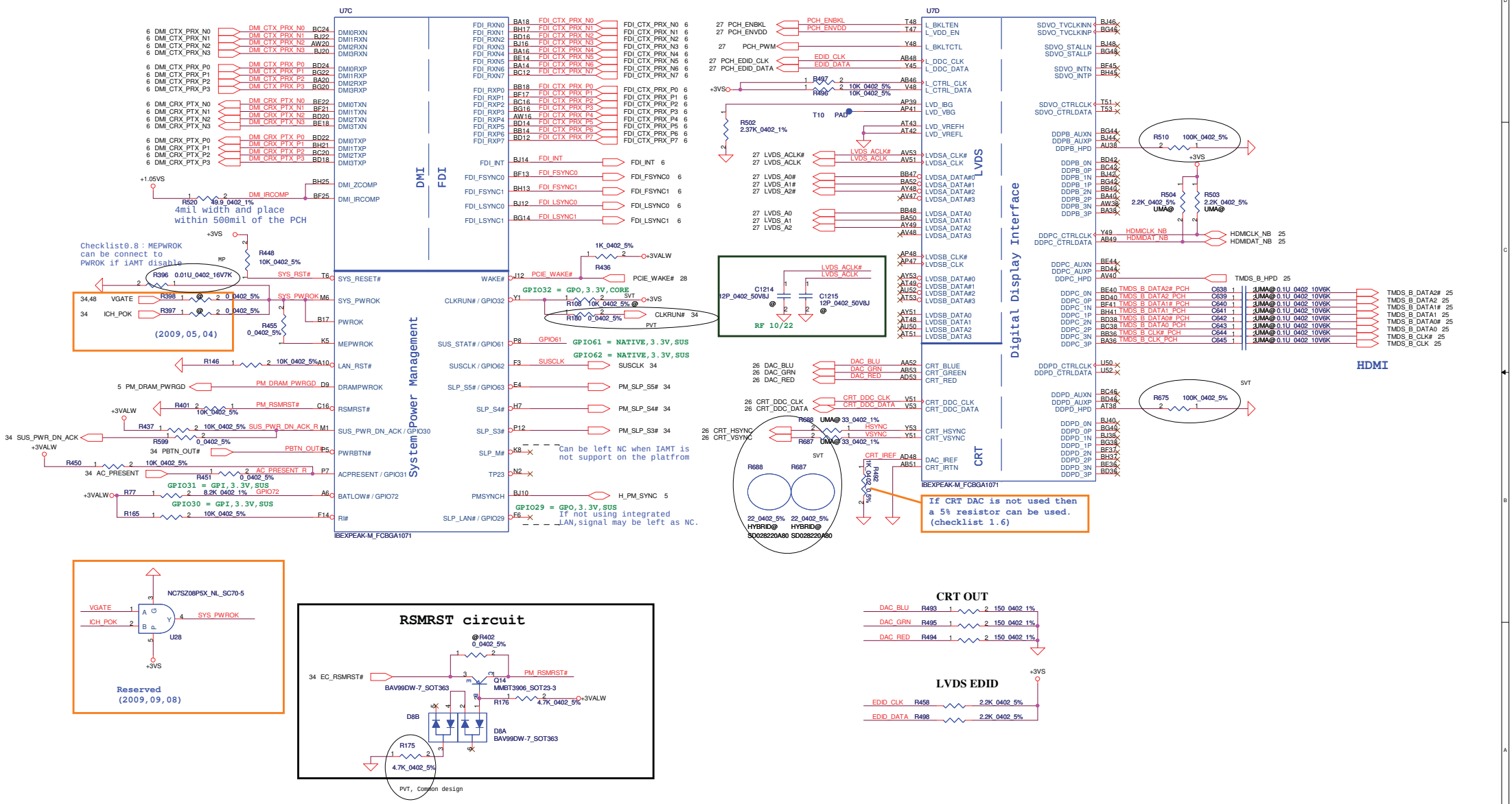


| Security Classification | Compal Secret Data | | |
|---|---|---|---|
| Issued Date | 2010/01/13 | Deciphered Date | 2011/01/13 |

THIS SHEET OF ENGINEERING DRAWING IS THE PROPRIETARY PROPERTY OF COMPAL ELECTRONICS, INC. AND CONTAINS CONFIDENTIAL AND TRADE SECRET INFORMATION. THIS SHEET MAY NOT BE TRANSFERED FROM THE CUSTODY OF THE COMPETENT DIVISION OF R&D DEPARTMENT EXCEPT AS AUTHORIZED BY COMPAL ELECTRONICS, INC. NEITHER THIS SHEET NOR THE INFORMATION IT CONTAINS MAY BE USED BY OR DISCLOSED TO ANY THIRD PARTY WITHOUT PRIOR WRITTEN CONSENT OF COMPAL ELECTRONICS, INC.

Compal Electronics, Inc.

Title: IBEX-M(3/6)-DMI/LVDS/DP/PM

Size: Custom | Document Number: LA-5941P | Rev: 0.3

Date: Thursday, April 08, 2010 | Sheet 15 of 50

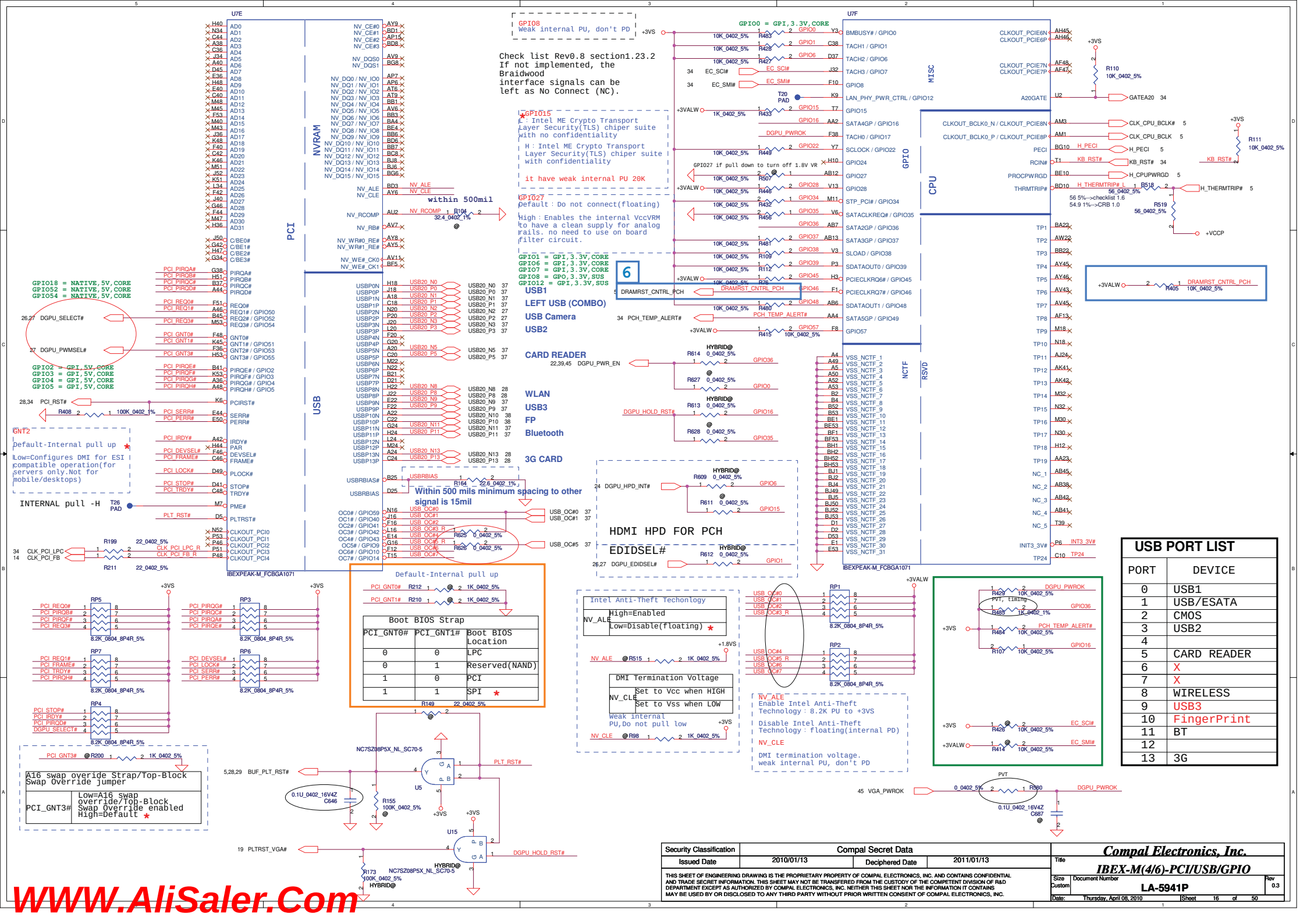


WWW.AliSaler.Com

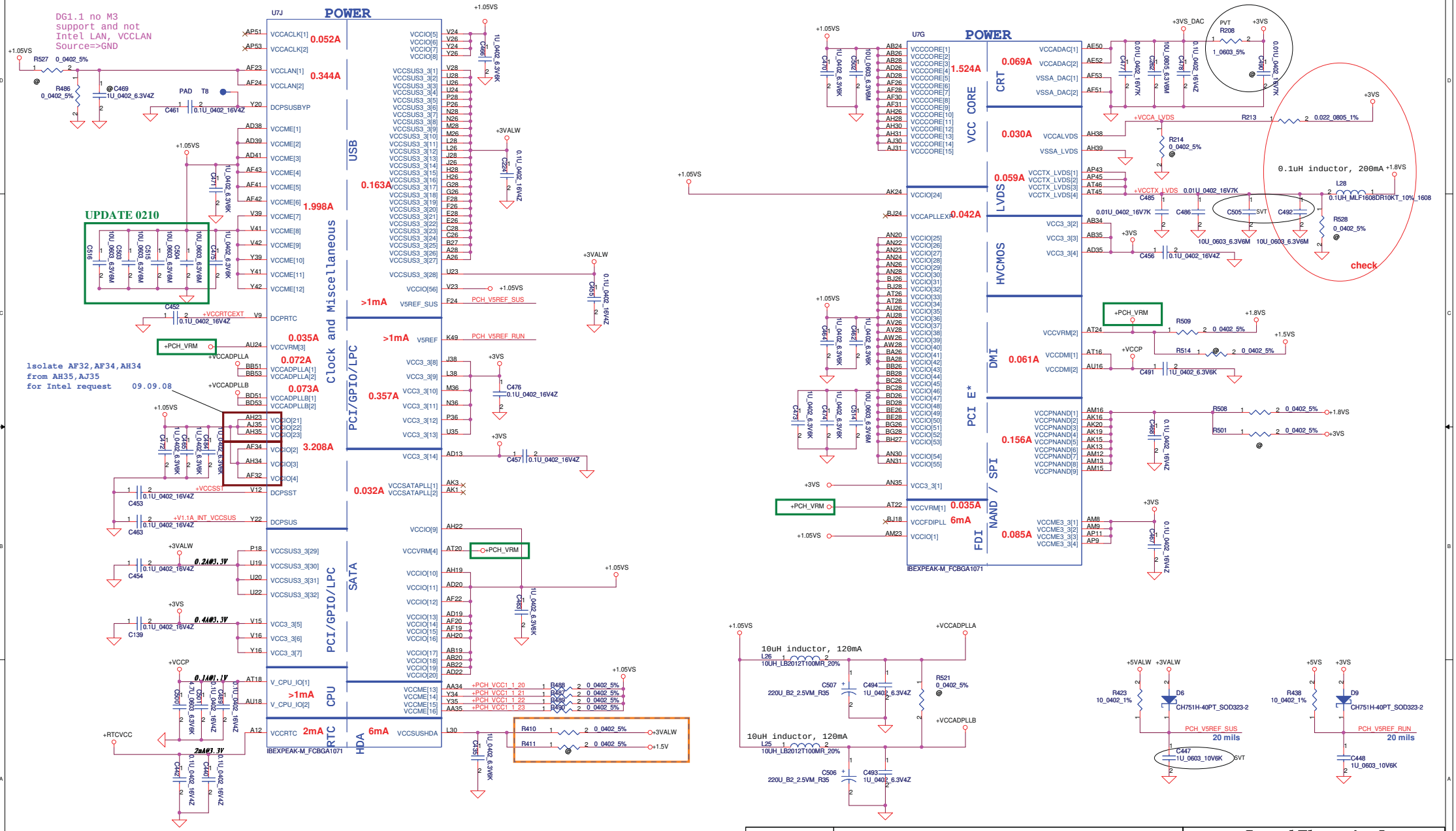


| Security Classification | Compal Secret Data | | |
|---|---|---|---|
| Issued Date | 2010/01/13 | Deciphered Date | 2011/01/13 |

THIS SHEET OF ENGINEERING DRAWING IS THE PROPRIETARY PROPERTY OF COMPAL ELECTRONICS, INC. AND CONTAINS CONFIDENTIAL AND TRADE SECRET INFORMATION. THIS SHEET MAY NOT BE TRANSFERED FROM THE CUSTODY OF THE COMPETENT DIVISION OF R&D DEPARTMENT EXCEPT AS AUTHORIZED BY COMPAL ELECTRONICS, INC. NEITHER THIS SHEET NOR THE INFORMATION IT CONTAINS MAY BE USED BY OR DISCLOSED TO ANY THIRD PARTY WITHOUT PRIOR WRITTEN CONSENT OF COMPAL ELECTRONICS, INC.

**Compal Electronics, Inc.**

Title: **IBEX-M(5/6)-PWR**

Size: Custom | Document Number: **LA-5941P** | Rev: 0.3

Date: Thursday, April 08, 2010 | Sheet 17 of 50

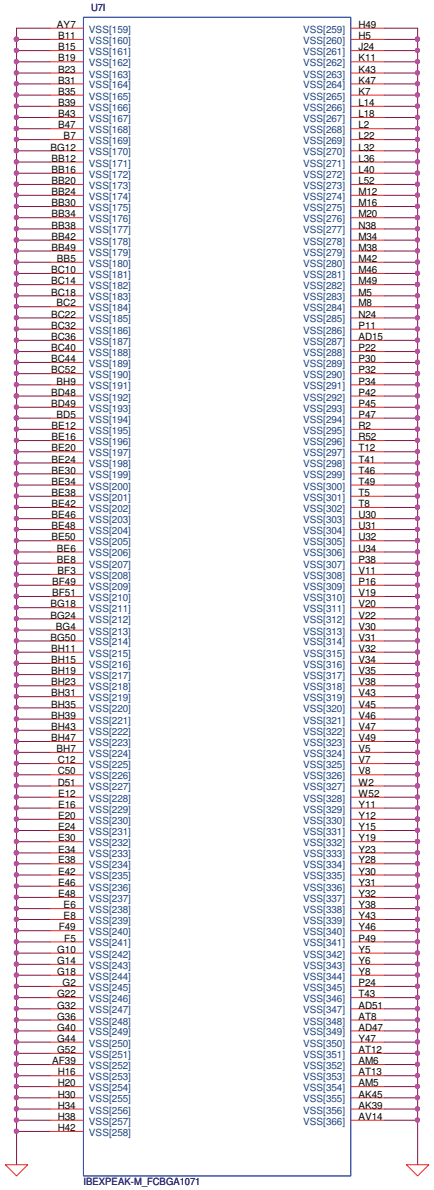


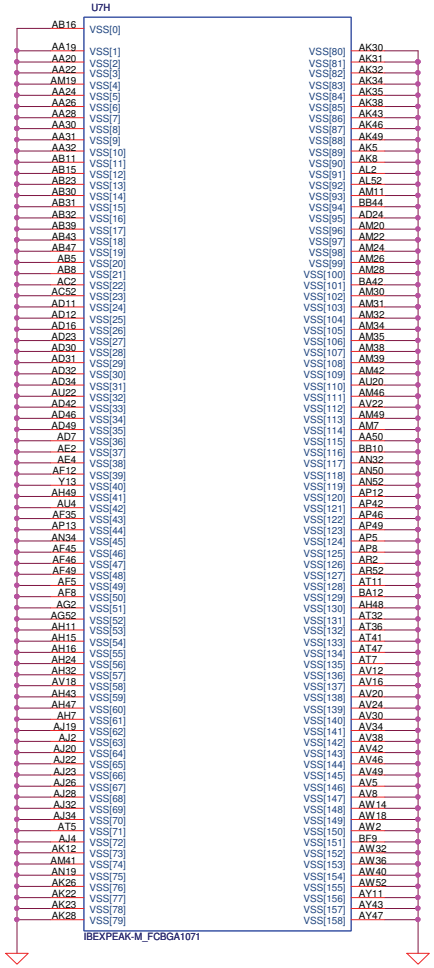


| Security Classification | Compal Secret Data | | |
|---|---|---|---|
| Issued Date | 2010/01/13 | Deciphered Date | 2011/01/13 |

THIS SHEET OF ENGINEERING DRAWING IS THE PROPRIETARY PROPERTY OF COMPAL ELECTRONICS, INC. AND CONTAINS CONFIDENTIAL AND TRADE SECRET INFORMATION. THIS SHEET MAY NOT BE TRANSFERED FROM THE CUSTODY OF THE COMPETENT DIVISION OF R&D DEPARTMENT EXCEPT AS AUTHORIZED BY COMPAL ELECTRONICS, INC. NEITHER THIS SHEET NOR THE INFORMATION IT CONTAINS MAY BE USED BY OR DISCLOSED TO ANY THIRD PARTY WITHOUT PRIOR WRITTEN CONSENT OF COMPAL ELECTRONICS, INC.

**Compal Electronics, Inc.**

Title: **IBEX-M(6/6)-GND**

Size: Custom | Document Number: **LA-5941P** | Rev: 0.3

Date: Thursday, April 08, 2010 | Sheet 18 of 50

WWW.AliSaler.Com

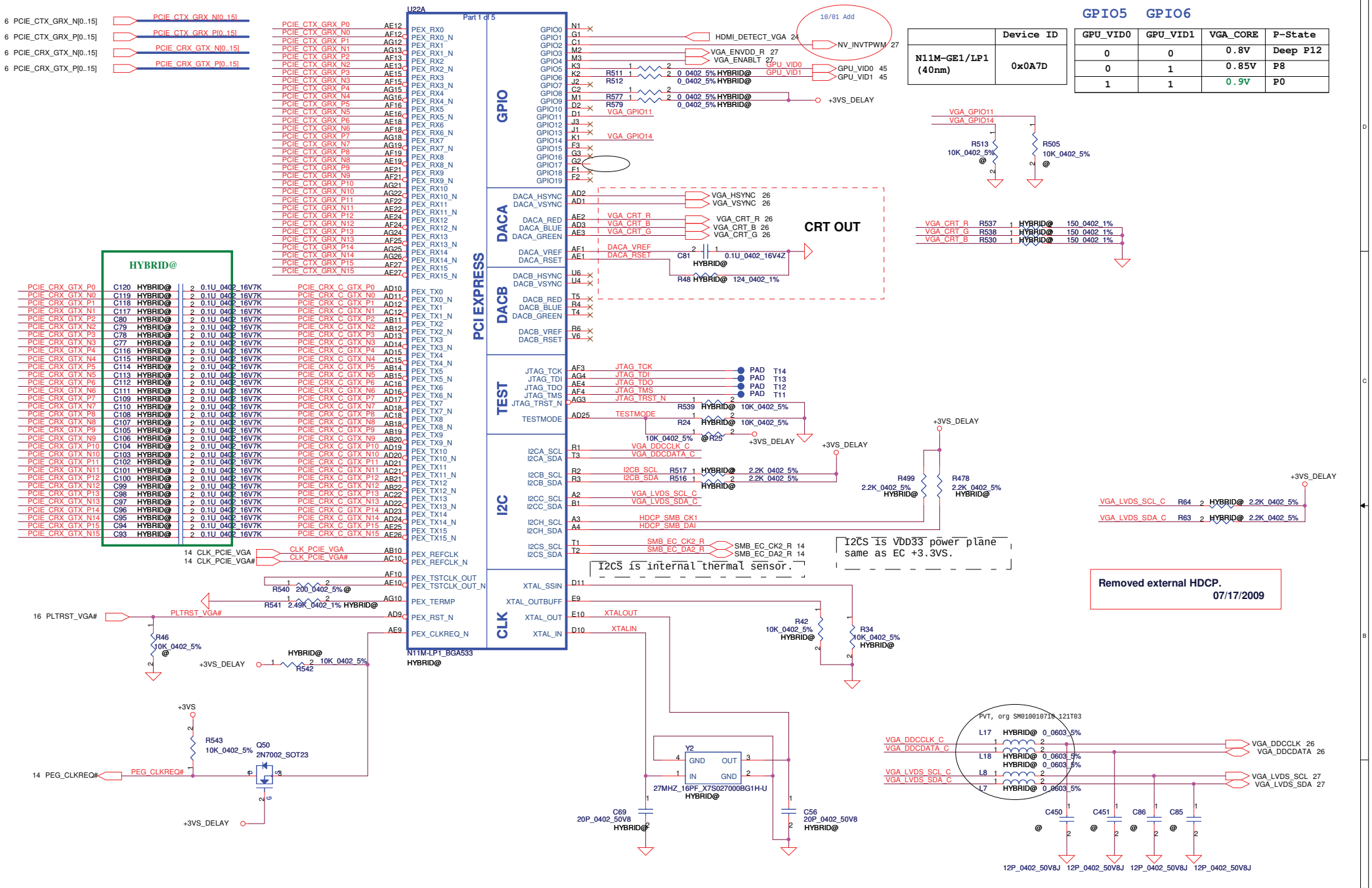


## GPIO5 GPIO6

| | Device ID |
|---|---|
| N11M-GE1/LP1 (40nm) | 0x0A7D |

| GPU_VID0 | GPU_VID1 | VGA_CORE | P-State |
|---|---|---|---|
| 0 | 0 | 0.8V | Deep P12 |
| 0 | 1 | 0.85V | P8 |
| 1 | 1 | 0.9V | P0 |

| Security Classification | Compal Secret Data | | |
|---|---|---|---|
| Issued Date | 2010/01/13 | Deciphered Date | 2011/01/13 |

THIS SHEET OF ENGINEERING DRAWING IS THE PROPRIETARY PROPERTY OF COMPAL ELECTRONICS, INC. AND CONTAINS CONFIDENTIAL AND TRADE SECRET INFORMATION. THIS SHEET MAY NOT BE TRANSFERED FROM THE CUSTODY OF THE COMPETENT DIVISION OF R&D DEPARTMENT EXCEPT AS AUTHORIZED BY COMPAL ELECTRONICS, INC. NEITHER THIS SHEET NOR THE INFORMATION IT CONTAINS MAY BE USED BY OR DISCLOSED TO ANY THIRD PARTY WITHOUT PRIOR WRITTEN CONSENT OF COMPAL ELECTRONICS, INC.

**Compal Electronics, Inc.**

Title: **N10M-GE1 PCIE,GPIO,CLK**

Size: B | Document Number: LA-5941P | Rev: 0.3

Date: Thursday, April 08, 2010 | Sheet 19 of 50

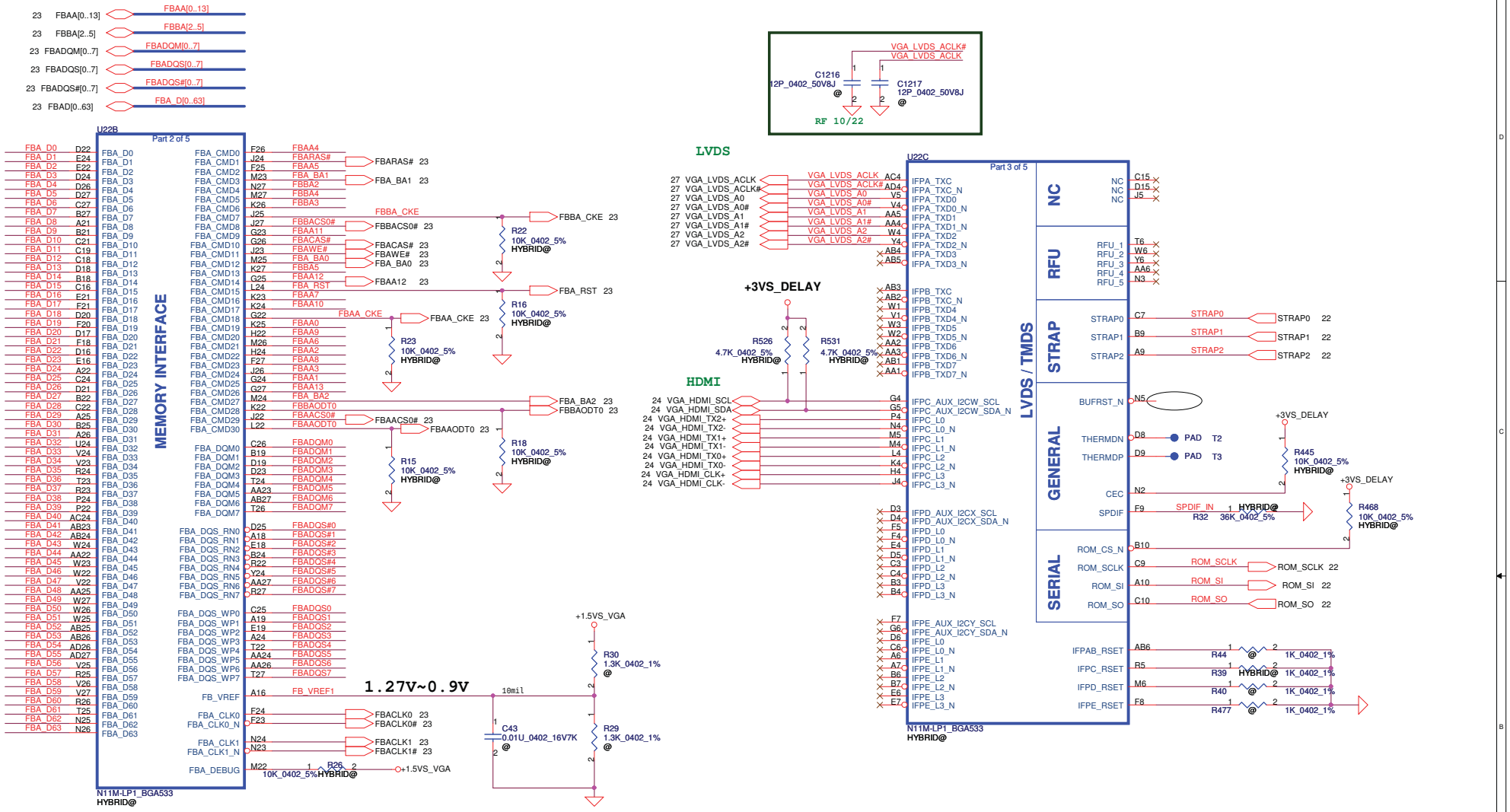


| Security Classification | Compal Secret Data | | |
|---|---|---|---|
| Issued Date | 2010/01/13 | Deciphered Date | 2011/01/13 |

THIS SHEET OF ENGINEERING DRAWING IS THE PROPRIETARY PROPERTY OF COMPAL ELECTRONICS, INC. AND CONTAINS CONFIDENTIAL AND TRADE SECRET INFORMATION. THIS SHEET MAY NOT BE TRANSFERRED FROM THE CUSTODY OF THE COMPETENT DIVISION OF R&D DEPARTMENT EXCEPT AS AUTHORIZED BY COMPAL ELECTRONICS, INC. NEITHER THIS SHEET NOR THE INFORMATION IT CONTAINS MAY BE USED BY OR DISCLOSED TO ANY THIRD PARTY WITHOUT PRIOR WRITTEN CONSENT OF COMPAL ELECTRONICS, INC.

**Compal Electronics, Inc.**

Title: **N10M-GE1 LVDS,Memory Bus**

Size: B | Document Number: LA-5941P | Rev: 0.3

Date: Thursday, April 08, 2010 | Sheet 20 of 50

WWW.AliSaler.Com

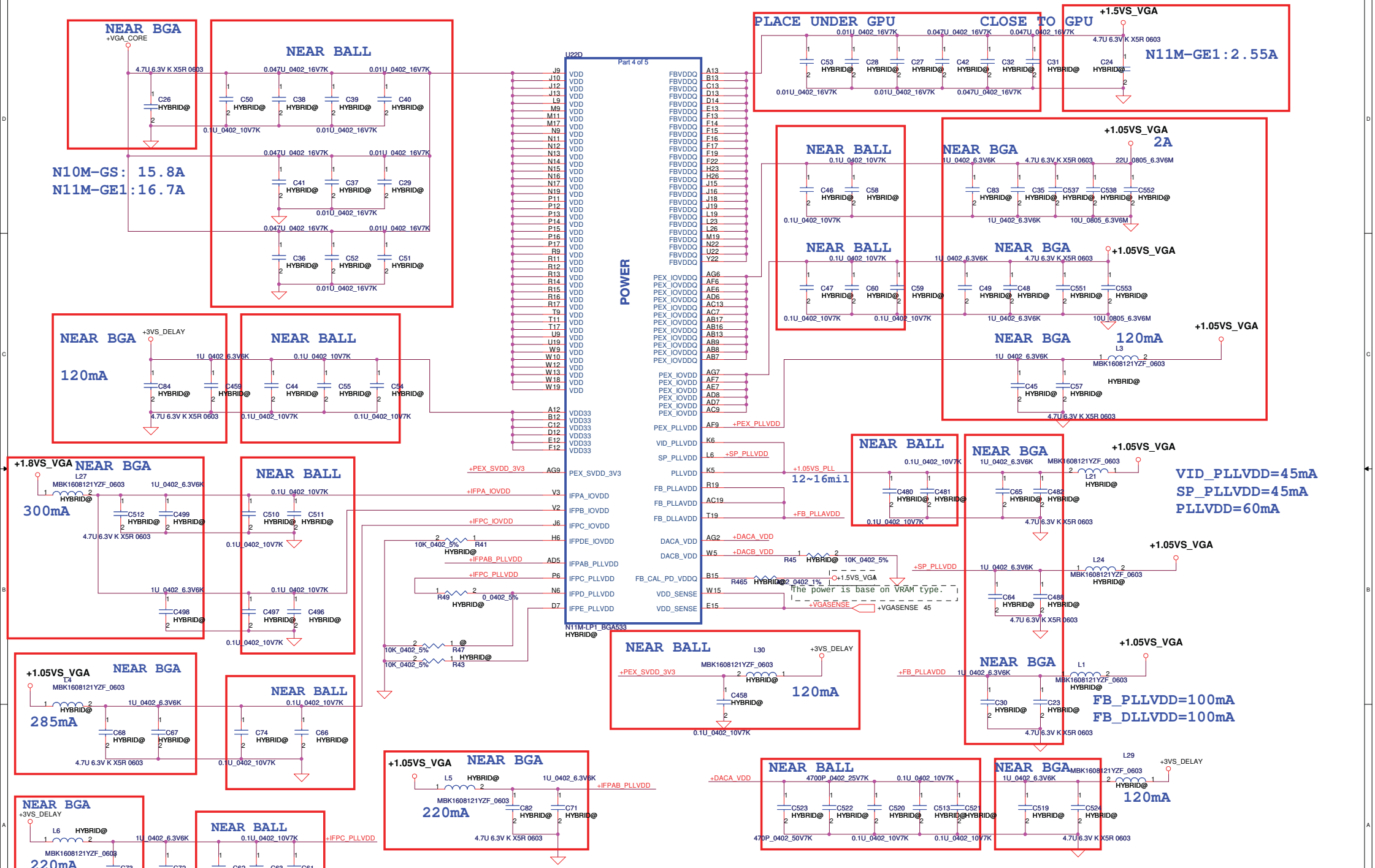


| Security Classification | Compal Secret Data | | |
|---|---|---|---|
| Issued Date | 2010/01/13 | Deciphered Date | 2011/01/13 |

THIS SHEET OF ENGINEERING DRAWING IS THE PROPRIETARY PROPERTY OF COMPAL ELECTRONICS, INC. AND CONTAINS CONFIDENTIAL AND TRADE SECRET INFORMATION. THIS SHEET MAY NOT BE TRANSFERED FROM THE CUSTODY OF THE COMPETENT DIVISION OF R&D DEPARTMENT EXCEPT AS AUTHORIZED BY COMPAL ELECTRONICS, INC. NEITHER THIS SHEET NOR THE INFORMATION IT CONTAINS MAY BE USED BY OR DISCLOSED TO ANY THIRD PARTY WITHOUT PRIOR WRITTEN CONSENT OF COMPAL ELECTRONICS, INC.

**Compal Electronics, Inc.**

Title: **N10M-GE1 PWR**

Size: Custom | Document Number: LA-5941P | Rev: 0.3

Date: Thursday, April 08, 2010 | Sheet 21 of 50

A total of 8 signals are required for GB1 strapping this includes
2 reference signals
6 physical strapping pins
4 logical strapping bits
A total of 24 logical strapping bits are available

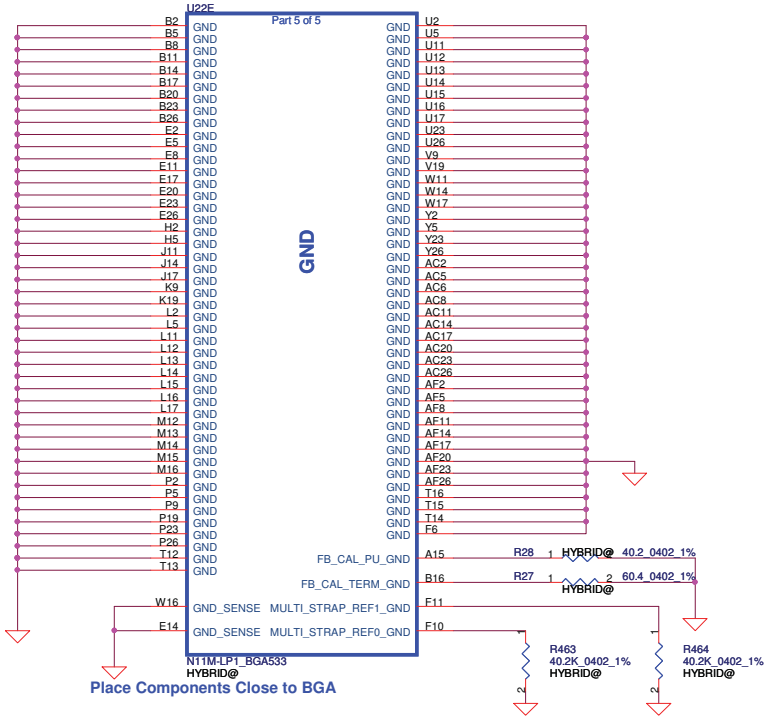


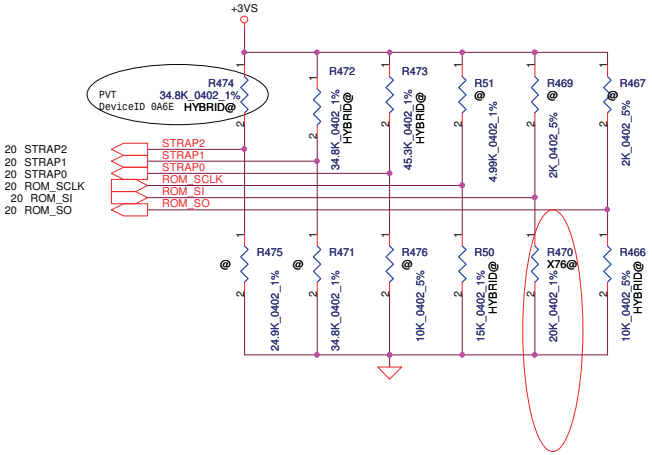


STRAP1 use for 3GIO_PADCFG to set 35K pull up.
(PUN-04335-001_V10 HW9 update)

| GPU | FB Memory (DDR3) | | ROM_SO | ROM_SCLK | ROM_SI | STRAP2 | STRAP1 | STRAP0 |
|---|---|---|---|---|---|---|---|---|
| N11M-GE1 LP1 (0x0A7D) 40nm | Samsung 800MHz (defaul) | K4W1G1646E-HC12 | | | | | | |
| | | 64Mx16 | PD 10K | PD 15K | PD 20K | PU 30K | PU 35K | PU 45K |
| | Hynix 800MHz | H5TQ1G63BFR-12C | | | | | | |
| | | 64Mx16 | PD 10K | PD 15K | PD 15K | PU 30K | PU 35K | PU 45K |
| | | | | | X76 | | | |

| N11M-GE1 LP1 | Memory/PKG | FBVDDQ | FB_CAL_PU_GND | FBCAL_PD_VDDQ | FBCAL_TERM_GND |
|---|---|---|---|---|---|
| | DDR3 | +1.5VS | 40.2 ohm | 40.2 ohm | 40.2/60.4 ohm |
| | | | | | |

Must be used 1% resister for driver calibration

DG-04642-001-V01(May 22, 2009)

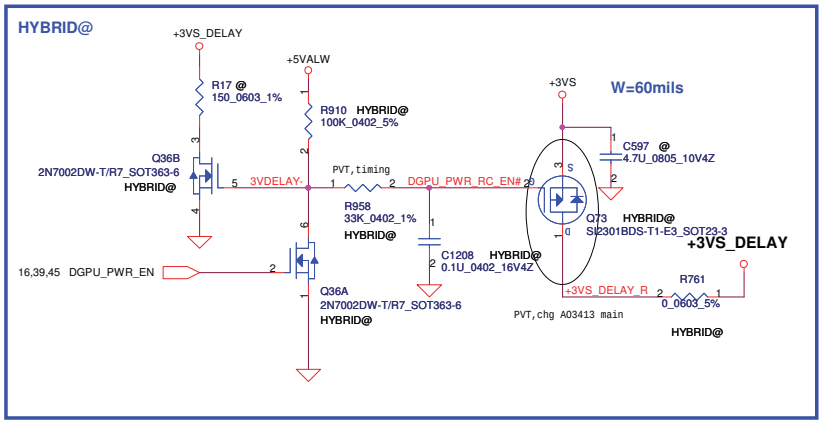


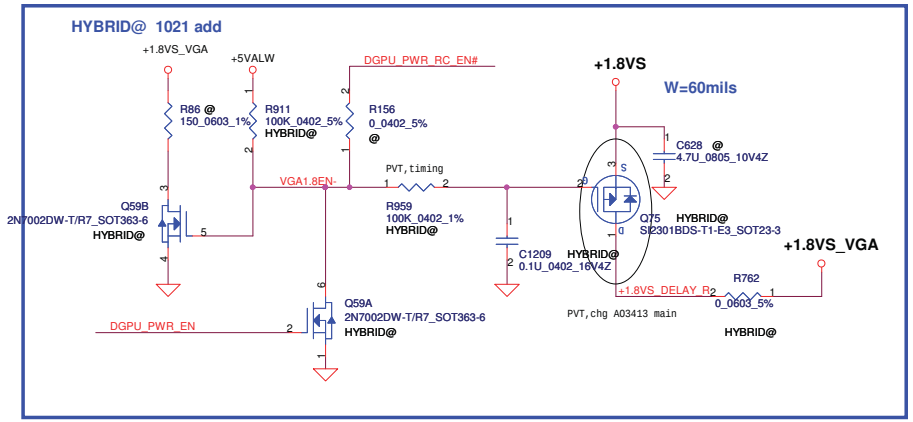


| Security Classification | Compal Secret Data | | |
|---|---|---|---|
| Issued Date | 2010/01/13 | Deciphered Date | 2011/01/13 |

THIS SHEET OF ENGINEERING DRAWING IS THE PROPRIETARY PROPERTY OF COMPAL ELECTRONICS, INC. AND CONTAINS CONFIDENTIAL AND TRADE SECRET INFORMATION. THIS SHEET MAY NOT BE TRANSFERRED FROM THE CUSTODY OF THE COMPETENT DIVISION OF R&D DEPARTMENT EXCEPT AS AUTHORIZED BY COMPAL ELECTRONICS, INC. NEITHER THIS SHEET NOR THE INFORMATION IT CONTAINS MAY BE USED BY OR DISCLOSED TO ANY THIRD PARTY WITHOUT PRIOR WRITTEN CONSENT OF COMPAL ELECTRONICS, INC.

Compal Electronics, Inc.

Title: N10M-GE1 GND & STRAP

Size: B | Document Number: LA-5941P | Rev: 0.3

Date: Thursday, April 08, 2010 | Sheet 22 of 50

WWW.AliSaler.Com

## N10x 40nm DDR3 MAPPING
## NVIDIA COCUMENT FOR DA-3978-001

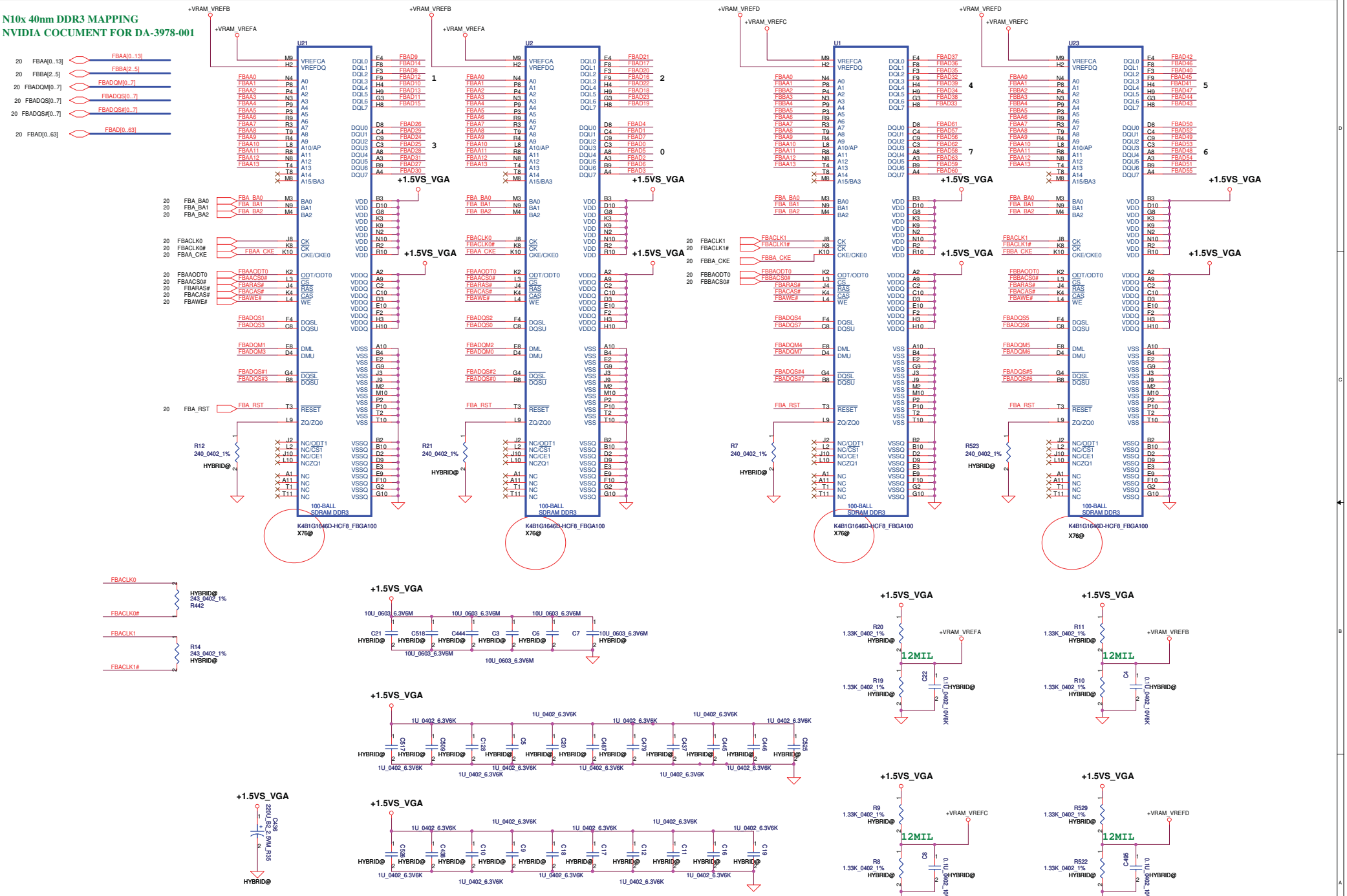


| Security Classification | Compal Secret Data | | |
|---|---|---|---|
| Issued Date | 2010/01/13 | Deciphered Date | 2011/01/13 |

THIS SHEET OF ENGINEERING DRAWING IS THE PROPRIETARY PROPERTY OF COMPAL ELECTRONICS, INC. AND CONTAINS CONFIDENTIAL AND TRADE SECRET INFORMATION. THIS SHEET MAY NOT BE TRANSFERED FROM THE CUSTODY OF THE COMPETENT DIVISION OF R&D DEPARTMENT EXCEPT AS AUTHORIZED BY COMPAL ELECTRONICS, INC. NEITHER THIS SHEET NOR THE INFORMATION IT CONTAINS MAY BE USED BY OR DISCLOSED TO ANY THIRD PARTY WITHOUT PRIOR WRITTEN CONSENT OF COMPAL ELECTRONICS, INC.

**Compal Electronics, Inc.**

Title: **VRAM DDR3**

| Size | Document Number | Rev |
|---|---|---|
| C | LA-5941P | 0.3 |

Date: Thursday, April 08, 2010 Sheet 23 of 50

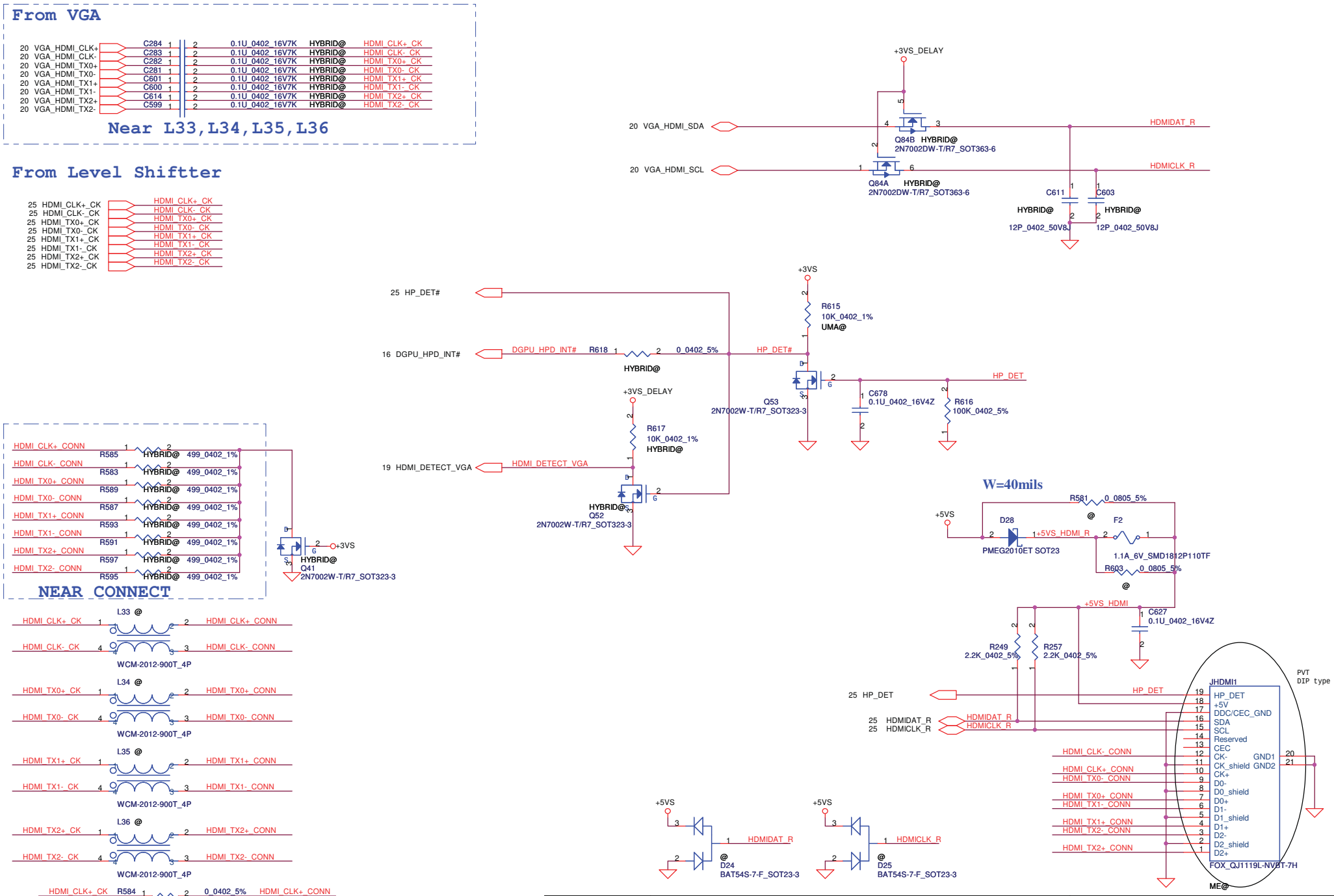


| Security Classification | Compal Secret Data | | |
|---|---|---|---|
| Issued Date | 2010/01/13 | Deciphered Date | 2011/01/13 |

THIS SHEET OF ENGINEERING DRAWING IS THE PROPRIETARY PROPERTY OF COMPAL ELECTRONICS, INC. AND CONTAINS CONFIDENTIAL AND TRADE SECRET INFORMATION. THIS SHEET MAY NOT BE TRANSFERED FROM THE CUSTODY OF THE COMPETENT DIVISION OF R&D DEPARTMENT EXCEPT AS AUTHORIZED BY COMPAL ELECTRONICS, INC. NEITHER THIS SHEET NOR THE INFORMATION IT CONTAINS MAY BE USED BY OR DISCLOSED TO ANY THIRD PARTY WITHOUT PRIOR WRITTEN CONSENT OF COMPAL ELECTRONICS, INC.

**Compal Electronics, Inc.**

Title: **HDMI CONN**

Size: Custom | Document Number: **LA-5941P** | Rev: 0.3

Date: Thursday, April 08, 2010 | Sheet 24 of 50

WWW.AliSaler.Com

P/N:SA00003GT00 (ASM1442)

FOR asmedia R428 STUFF
RESERVE THE R668 PULL UP TO 3VS
RESERVE THE R670 PULL DOWN TO GND
CHANGE R245 FROM 499 TO 3.4K OHM

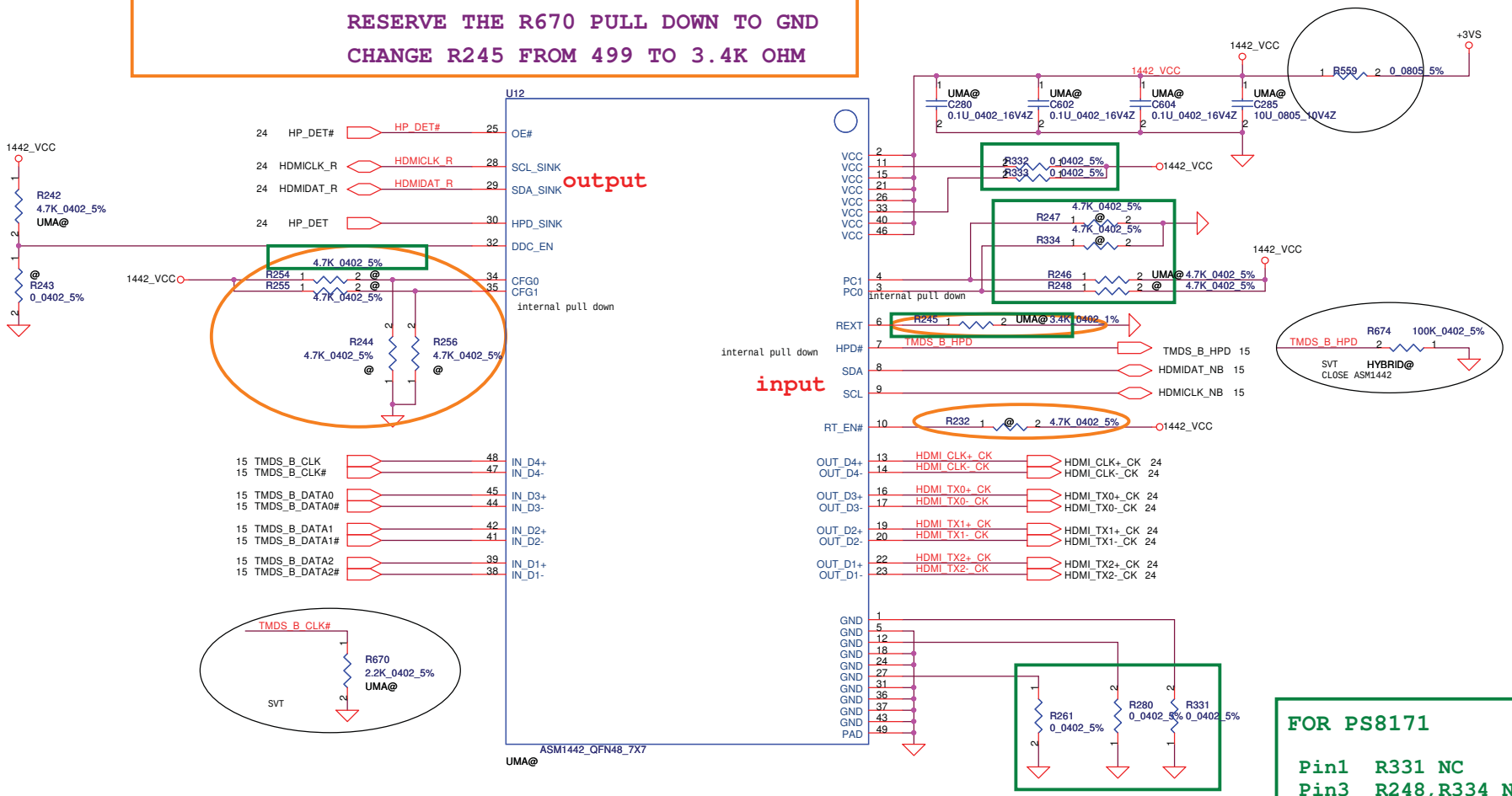


FOR PS8171

Pin1 R331 NC
Pin3 R248,R334 NC
Pin4 R246,R247 NC
Pin6 R245 499ohm
Pin11 R332 NC
Pin12 R280 NC

Pin27 R261 NC

Pin33 R333 NC
Pin34 R254 4.7K ohm

| | | | |
|---|---|---|---|
| Security Classification | Compal Secret Data | | |
| Issued Date | 2010/01/13 | Deciphered Date | 2011/01/13 |

THIS SHEET OF ENGINEERING DRAWING IS THE PROPRIETARY PROPERTY OF COMPAL ELECTRONICS, INC. AND CONTAINS CONFIDENTIAL AND TRADE SECRET INFORMATION. THIS SHEET MAY NOT BE TRANSFERED FROM THE CUSTODY OF THE COMPETENT DIVISION OF R&D DEPARTMENT EXCEPT AS AUTHORIZED BY COMPAL ELECTRONICS, INC. NEITHER THIS SHEET NOR THE INFORMATION IT CONTAINS MAY BE USED BY OR DISCLOSED TO ANY THIRD PARTY WITHOUT PRIOR WRITTEN CONSENT OF COMPAL ELECTRONICS, INC.

Compal Electronics, Inc.

Title: Level Shiftter_ASM1442

Size: Custom | Document Number: LA-5941P | Rev: 0.3

Date: Thursday, April 08, 2010 | Sheet 25 of 50

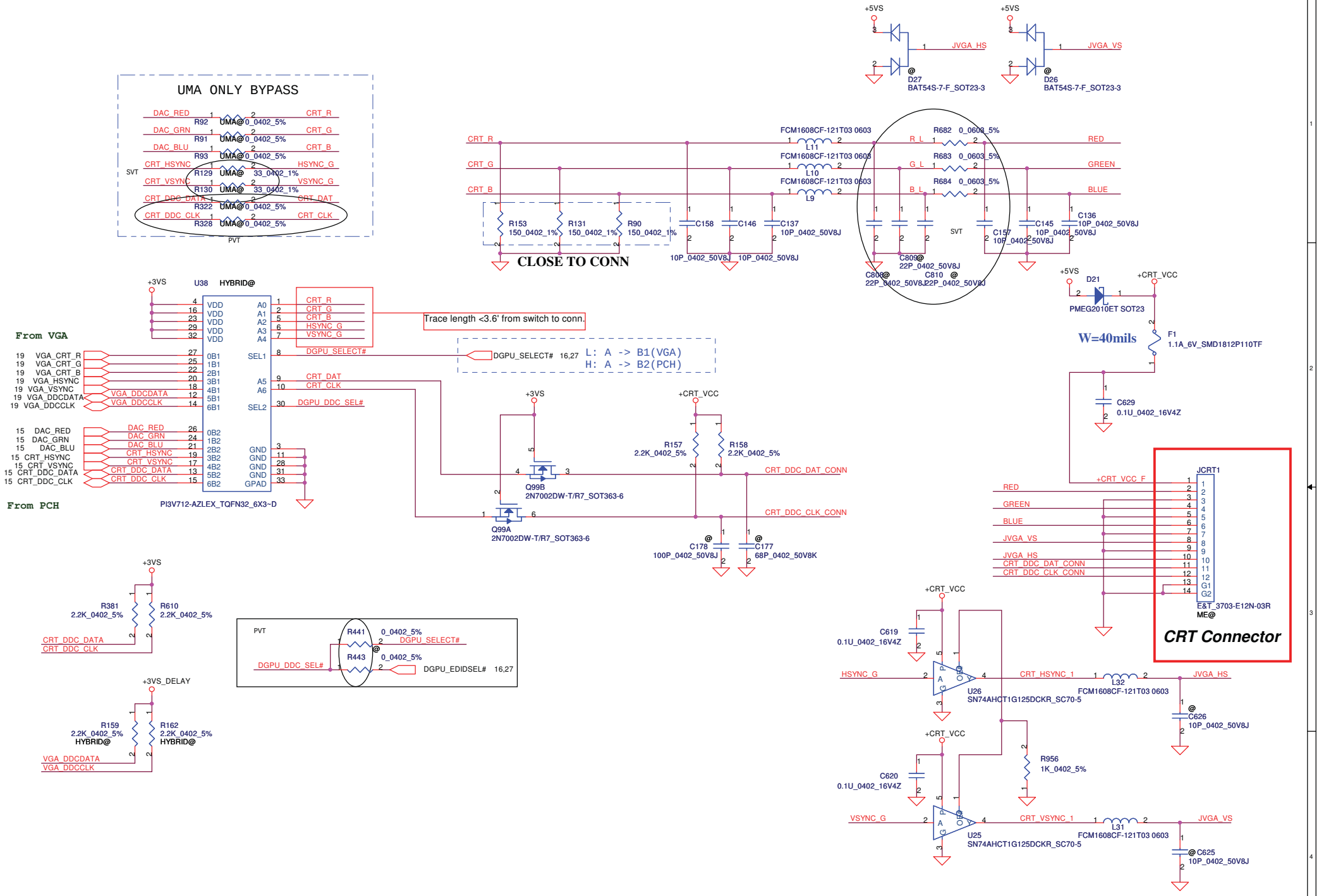


| Security Classification | Compal Secret Data | | |
|---|---|---|---|
| Issued Date | 2010/01/13 | Deciphered Date | 2011/01/13 |

THIS SHEET OF ENGINEERING DRAWING IS THE PROPRIETARY PROPERTY OF COMPAL ELECTRONICS, INC. AND CONTAINS CONFIDENTIAL AND TRADE SECRET INFORMATION. THIS SHEET MAY NOT BE TRANSFERED FROM THE CUSTODY OF THE COMPETENT DIVISION OF R&D DEPARTMENT EXCEPT AS AUTHORIZED BY COMPAL ELECTRONICS, INC. NEITHER THIS SHEET NOR THE INFORMATION IT CONTAINS MAY BE USED BY OR DISCLOSED TO ANY THIRD PARTY WITHOUT PRIOR WRITTEN CONSENT OF COMPAL ELECTRONICS, INC.

**Compal Electronics, Inc.**

Title: **CRT Connector**

Size: Custom | Document Number: **LA-5941P** | Rev: 0.3

Date: Thursday, April 08, 2010 | Sheet 26 of 50

WWW.AliSaler.Com

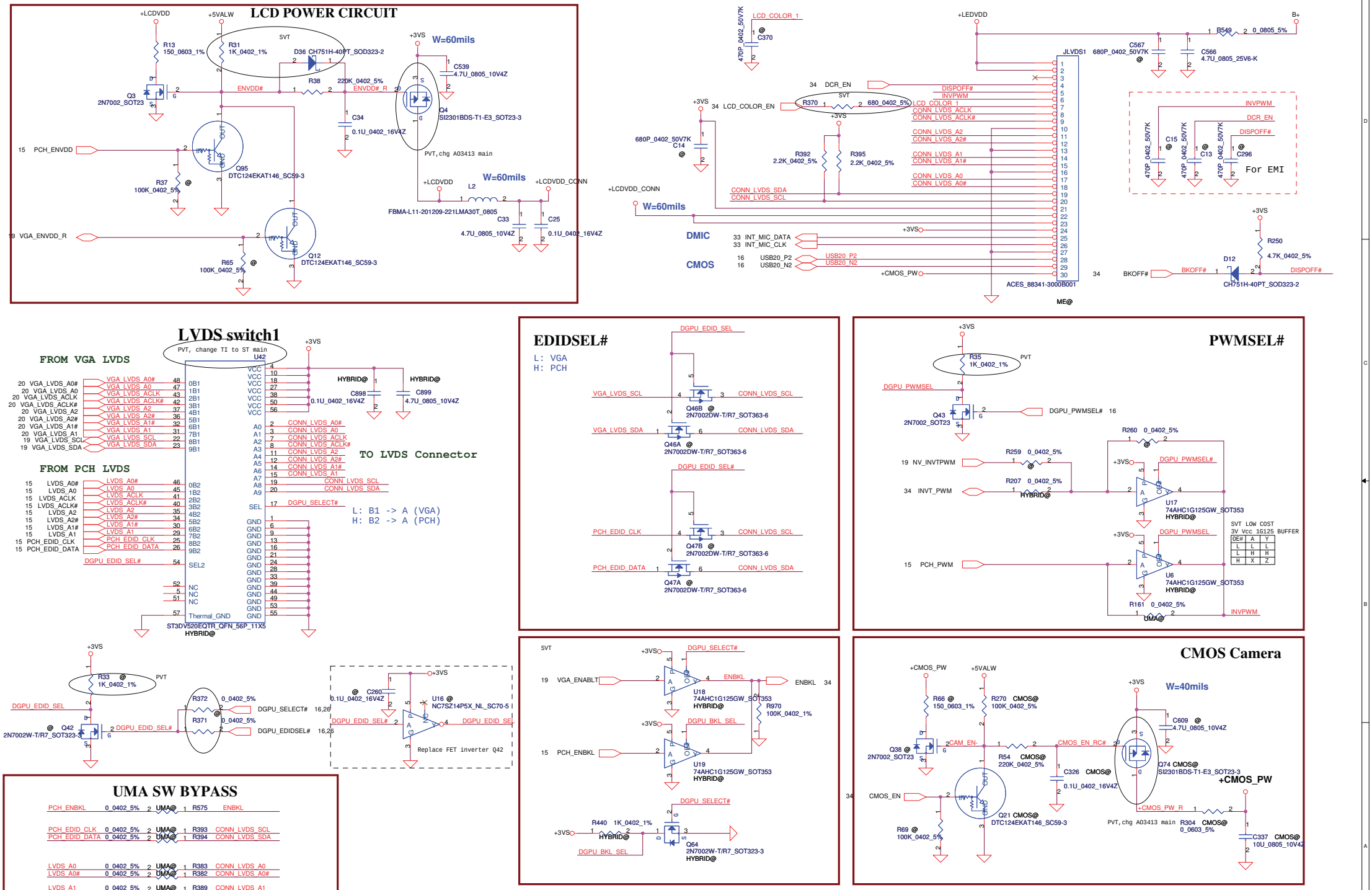


| Security Classification | Compal Secret Data | | |
|---|---|---|---|
| Issued Date | 2010/01/13 | Deciphered Date | 2011/01/13 |

THIS SHEET OF ENGINEERING DRAWING IS THE PROPRIETARY PROPERTY OF COMPAL ELECTRONICS, INC. AND CONTAINS CONFIDENTIAL AND TRADE SECRET INFORMATION. THIS SHEET MAY NOT BE TRANSFERED FROM THE CUSTODY OF THE COMPETENT DIVISION OF R&D DEPARTMENT EXCEPT AS AUTHORIZED BY COMPAL ELECTRONICS, INC. NEITHER THIS SHEET NOR THE INFORMATION IT CONTAINS MAY BE USED BY OR DISCLOSED TO ANY THIRD PARTY WITHOUT PRIOR WRITTEN CONSENT OF COMPAL ELECTRONICS, INC.

**Compal Electronics, Inc.**

Title: **LVDS/CAMERA**

| Size | Document Number | Rev |
|---|---|---|
| Custom | LA-5941P | 0.3 |

Date: Thursday, April 08, 2010 | Sheet 27 of 50

# Mini-Express Card for WLAN/WiMAX(Half)

## Mini-Express Card(WLAN/WiMAX)

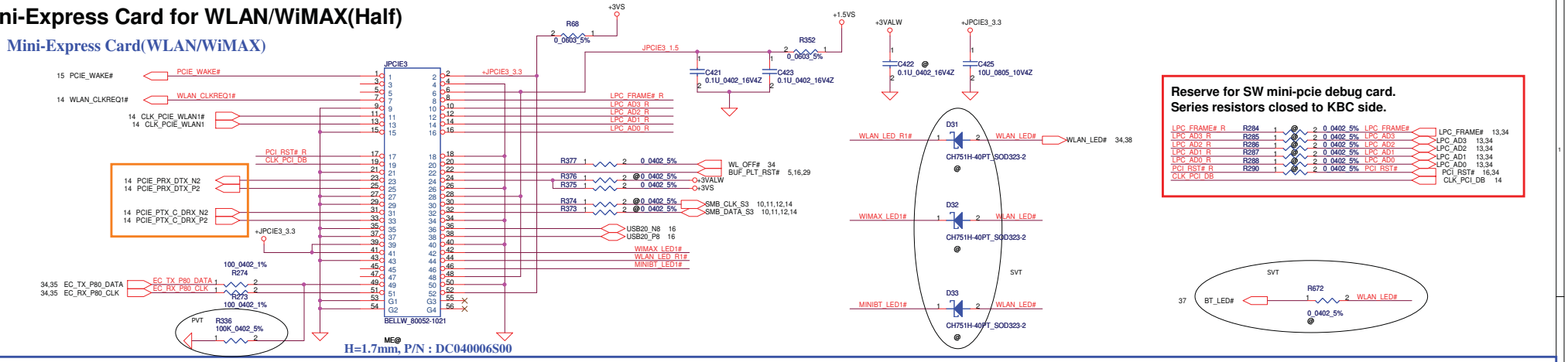


## Mini-Express Card(WWAN 3G)

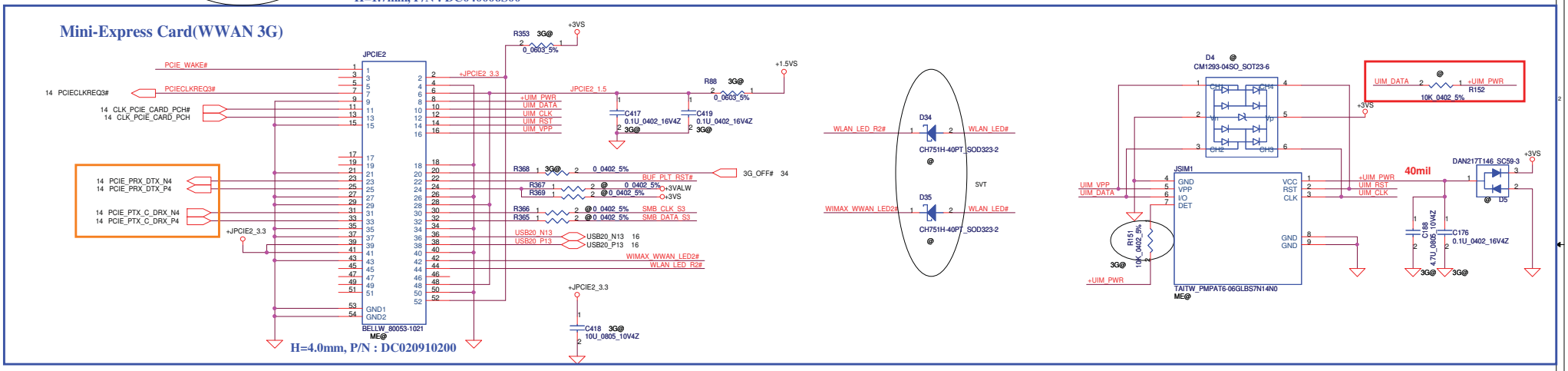


## Mini-Express Card( Only for SSD)

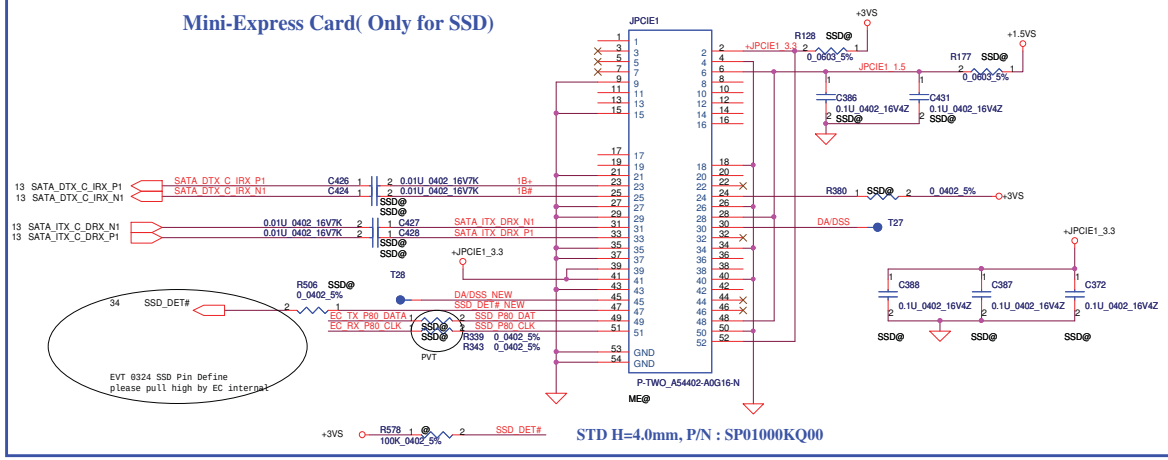


## SSD Pin Table

| Pin Number | | SATA Assignment | |
|---|---|---|---|
| 11 | | | |
| 13 | | | |
| 17 | | | |
| 19 | | | |
| 23 | | | +B (port 1) |
| 25 | | | -B (port 1) |
| 30 | 45 | DA/DSS | DA/DSS (NEW) |
| 31 | | | -A (port 1) |
| 32 | 47 | SSD_DET# | SSD_DET# (NEW) |
| 33 | | | +A (port 1) |

| Security Classification | Compal Secret Data | | |
|---|---|---|---|
| Issued Date | 2010/01/13 | Deciphered Date | 2011/01/13 |

THIS SHEET OF ENGINEERING DRAWING IS THE PROPRIETARY PROPERTY OF COMPAL ELECTRONICS, INC. AND CONTAINS CONFIDENTIAL AND TRADE SECRET INFORMATION. THIS SHEET MAY NOT BE TRANSFERED FROM THE CUSTODY OF THE COMPETENT DIVISION OF R&D DEPARTMENT EXCEPT AS AUTHORIZED BY COMPAL ELECTRONICS, INC. NEITHER THIS SHEET NOR THE INFORMATION IT CONTAINS MAY BE USED BY OR DISCLOSED TO ANY THIRD PARTY WITHOUT PRIOR WRITTEN CONSENT OF COMPAL ELECTRONICS, INC.

Compal Electronics, Inc.

Title: Mini-Card/Nwe Card/SIM

Size | Document Number: LA-5941P | Rev: 0.3

Date: Thursday, April 08, 2010 | Sheet 28 of 50

WWW.AliSaler.Com

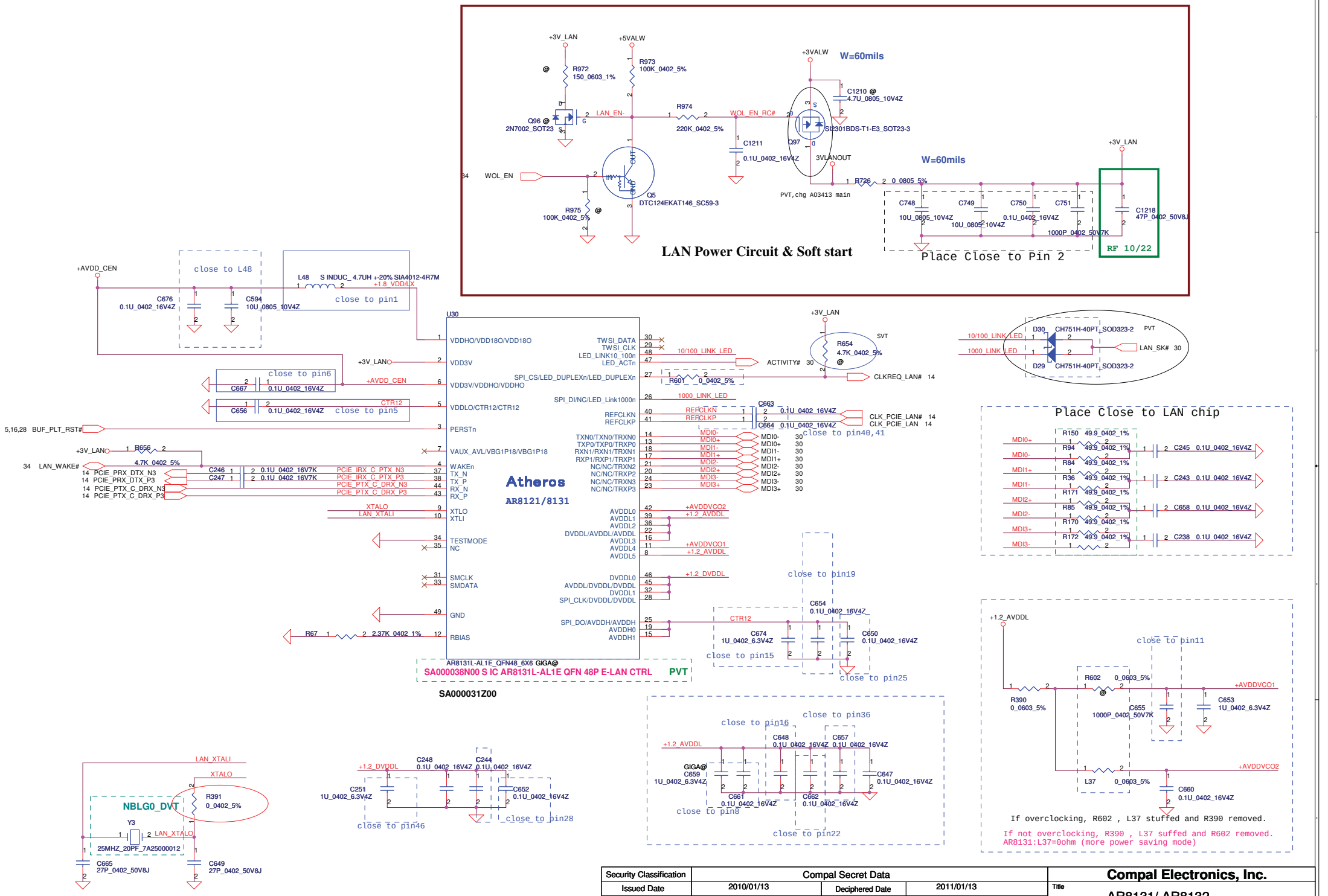


| Security Classification | Compal Secret Data | | |
|---|---|---|---|
| Issued Date | 2010/01/13 | Deciphered Date | 2011/01/13 |

THIS SHEET OF ENGINEERING DRAWING IS THE PROPRIETARY PROPERTY OF COMPAL ELECTRONICS, INC. AND CONTAINS CONFIDENTIAL AND TRADE SECRET INFORMATION. THIS SHEET MAY NOT BE TRANSFERED FROM THE CUSTODY OF THE COMPETENT DIVISION OF R&D DEPARTMENT EXCEPT AS AUTHORIZED BY COMPAL ELECTRONICS, INC. NEITHER THIS SHEET NOR THE INFORMATION IT CONTAINS MAY BE USED BY OR DISCLOSED TO ANY THIRD PARTY WITHOUT PRIOR WRITTEN CONSENT OF COMPAL ELECTRONICS, INC.

**Compal Electronics, Inc.**

Title: AR8131/ AR8132

Size: Custom | Document Number | Rev 0.3

Date: Thursday, April 08, 2010 | Sheet 29 of 50

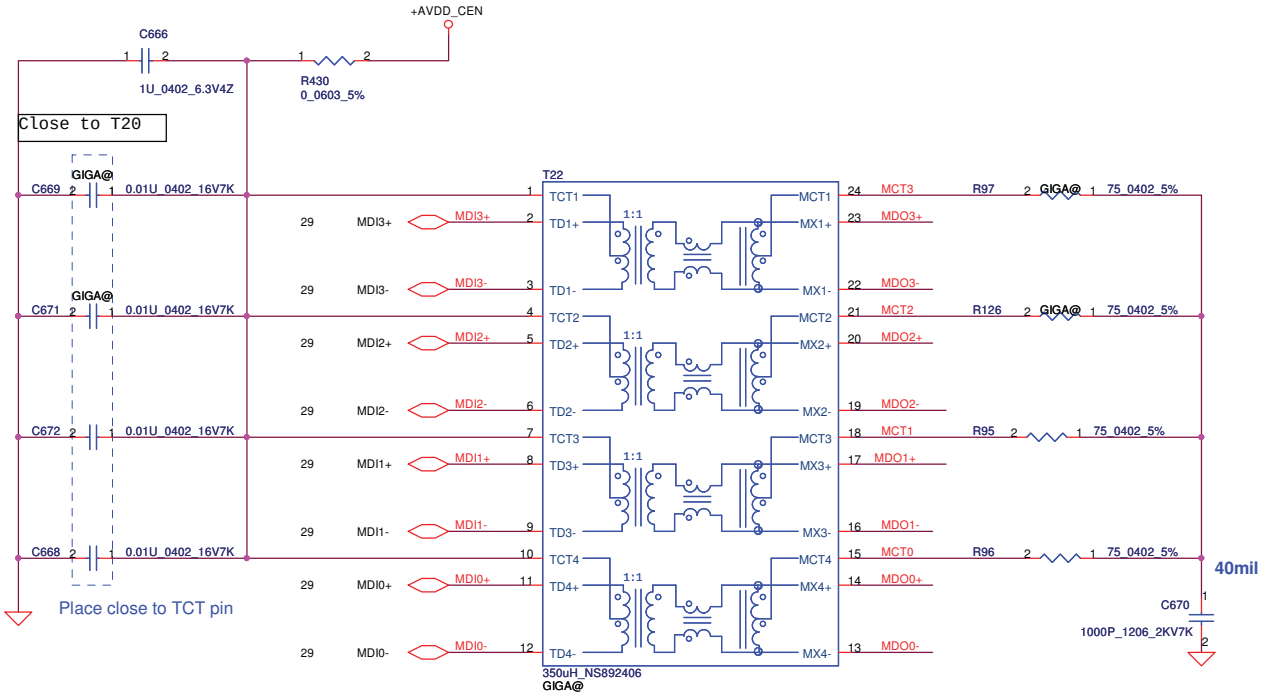

## RJ45 Conn.

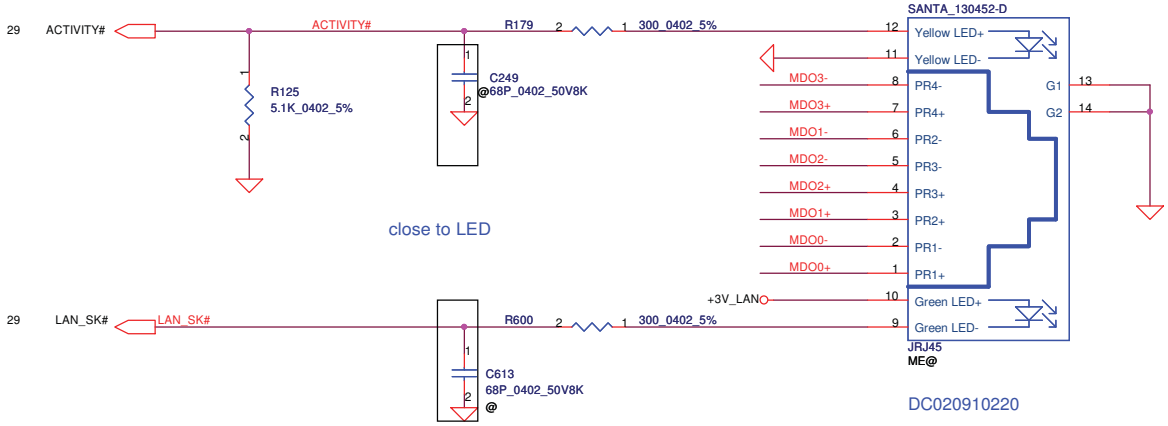


DC020910220

| Security Classification | Compal Secret Data | | |
|---|---|---|---|
| Issued Date | 2010/01/13 | Deciphered Date | 2011/01/13 |

THIS SHEET OF ENGINEERING DRAWING IS THE PROPRIETARY PROPERTY OF COMPAL ELECTRONICS, INC. AND CONTAINS CONFIDENTIAL AND TRADE SECRET INFORMATION. THIS SHEET MAY NOT BE TRANSFERED FROM THE CUSTODY OF THE COMPETENT DIVISION OF R&D DEPARTMENT EXCEPT AS AUTHORIZED BY COMPAL ELECTRONICS, INC. NEITHER THIS SHEET NOR THE INFORMATION IT CONTAINS MAY BE USED BY OR DISCLOSED TO ANY THIRD PARTY WITHOUT PRIOR WRITTEN CONSENT OF COMPAL ELECTRONICS, INC.

Compal Electronics, Inc.

Title: LAN Magnetic & RJ45

Size: B | Document Number: LA-5941P | Rev: 0.3

Date: Thursday, April 08, 2010 | Sheet 30 of 50

WWW.AliSaler.Com

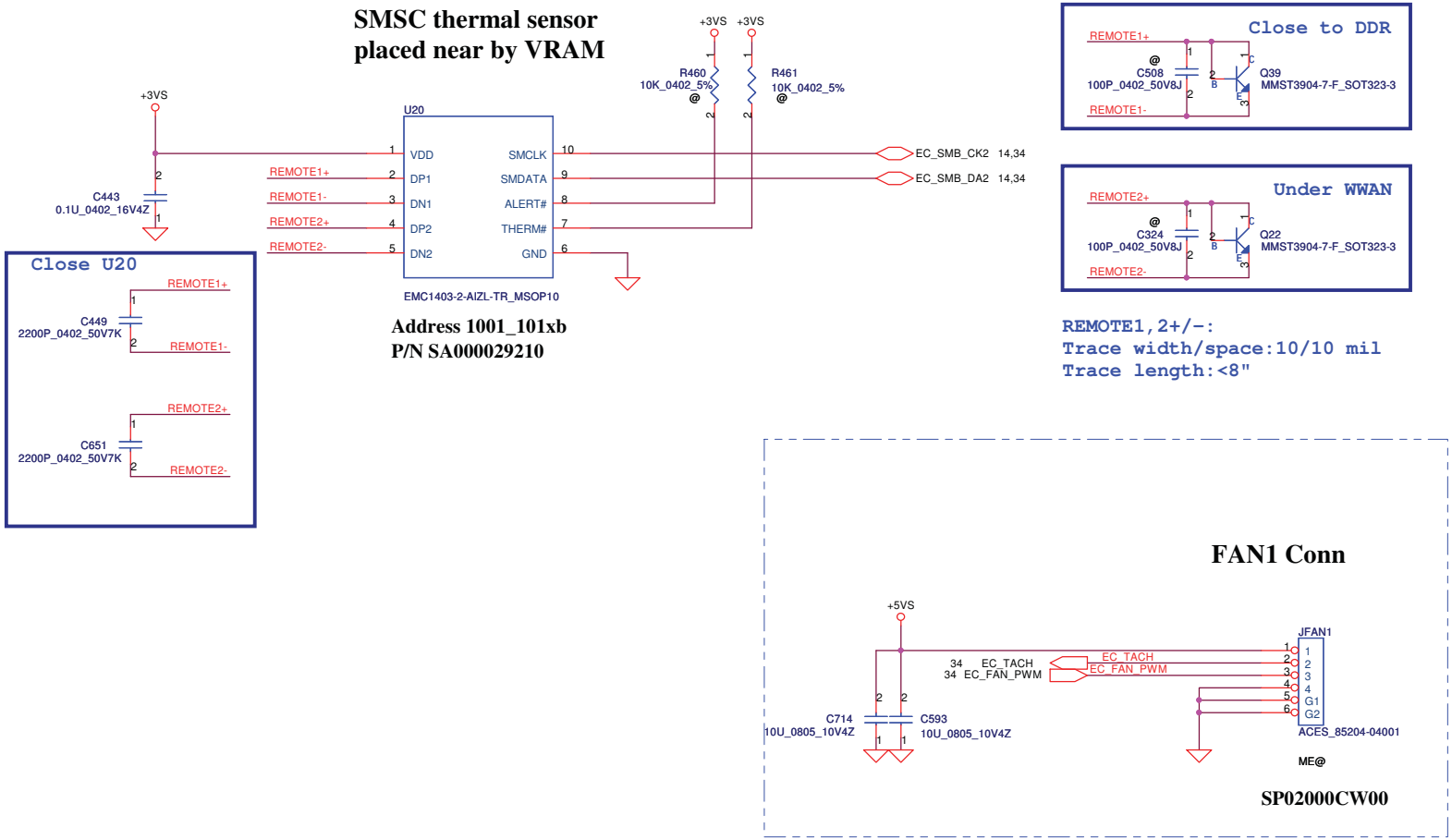


| Security Classification | Compal Secret Data | | |
|---|---|---|---|
| Issued Date | 2010/01/13 | Deciphered Date | 2011/01/13 |

THIS SHEET OF ENGINEERING DRAWING IS THE PROPRIETARY PROPERTY OF COMPAL ELECTRONICS, INC. AND CONTAINS CONFIDENTIAL AND TRADE SECRET INFORMATION. THIS SHEET MAY NOT BE TRANSFERED FROM THE CUSTODY OF THE COMPETENT DIVISION OF R&D DEPARTMENT EXCEPT AS AUTHORIZED BY COMPAL ELECTRONICS, INC. NEITHER THIS SHEET NOR THE INFORMATION IT CONTAINS MAY BE USED BY OR DISCLOSED TO ANY THIRD PARTY WITHOUT PRIOR WRITTEN CONSENT OF COMPAL ELECTRONICS, INC.

*Compal Electronics, Inc.*

Title: EMC1403_Thermal sensor/FAN

Size: Custom | Document Number: LA-5941P | Rev: 0.3

Date: Thursday, April 08, 2010 | Sheet 31 of 50

# SATA HDD Conn.

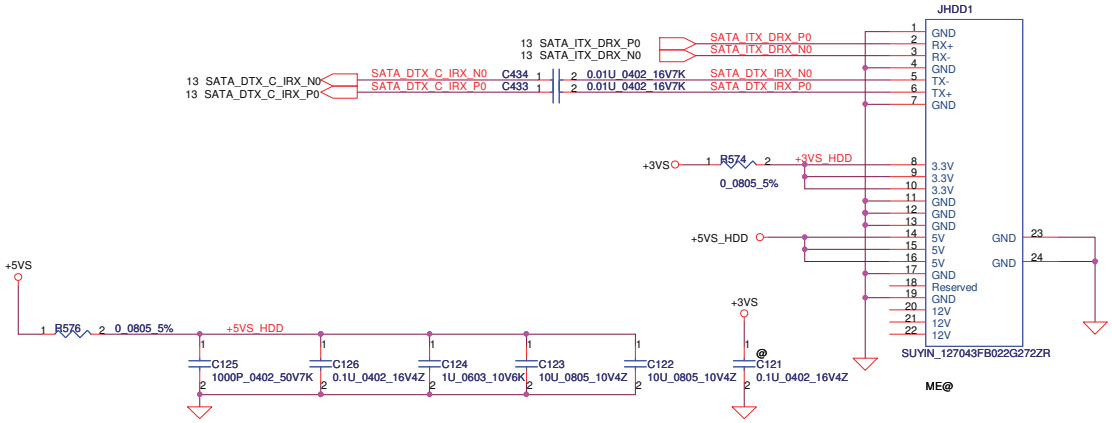


| Security Classification | Compal Secret Data | | |
|---|---|---|---|
| Issued Date | 2010/01/13 | Deciphered Date | 2011/01/13 |

THIS SHEET OF ENGINEERING DRAWING IS THE PROPRIETARY PROPERTY OF COMPAL ELECTRONICS, INC. AND CONTAINS CONFIDENTIAL AND TRADE SECRET INFORMATION. THIS SHEET MAY NOT BE TRANSFERED FROM THE CUSTODY OF THE COMPETENT DIVISION OF R&D DEPARTMENT EXCEPT AS AUTHORIZED BY COMPAL ELECTRONICS, INC. NEITHER THIS SHEET NOR THE INFORMATION IT CONTAINS MAY BE USED BY OR DISCLOSED TO ANY THIRD PARTY WITHOUT PRIOR WRITTEN CONSENT OF COMPAL ELECTRONICS, INC.

**Compal Electronics, Inc.**

Title: **HDD/ODD Connector**

Size: B | Document Number: **LA-5941P** | Rev: 0.3

Date: Thursday, April 08, 2010 | Sheet 32 of 50

WWW.AliSaler.Com

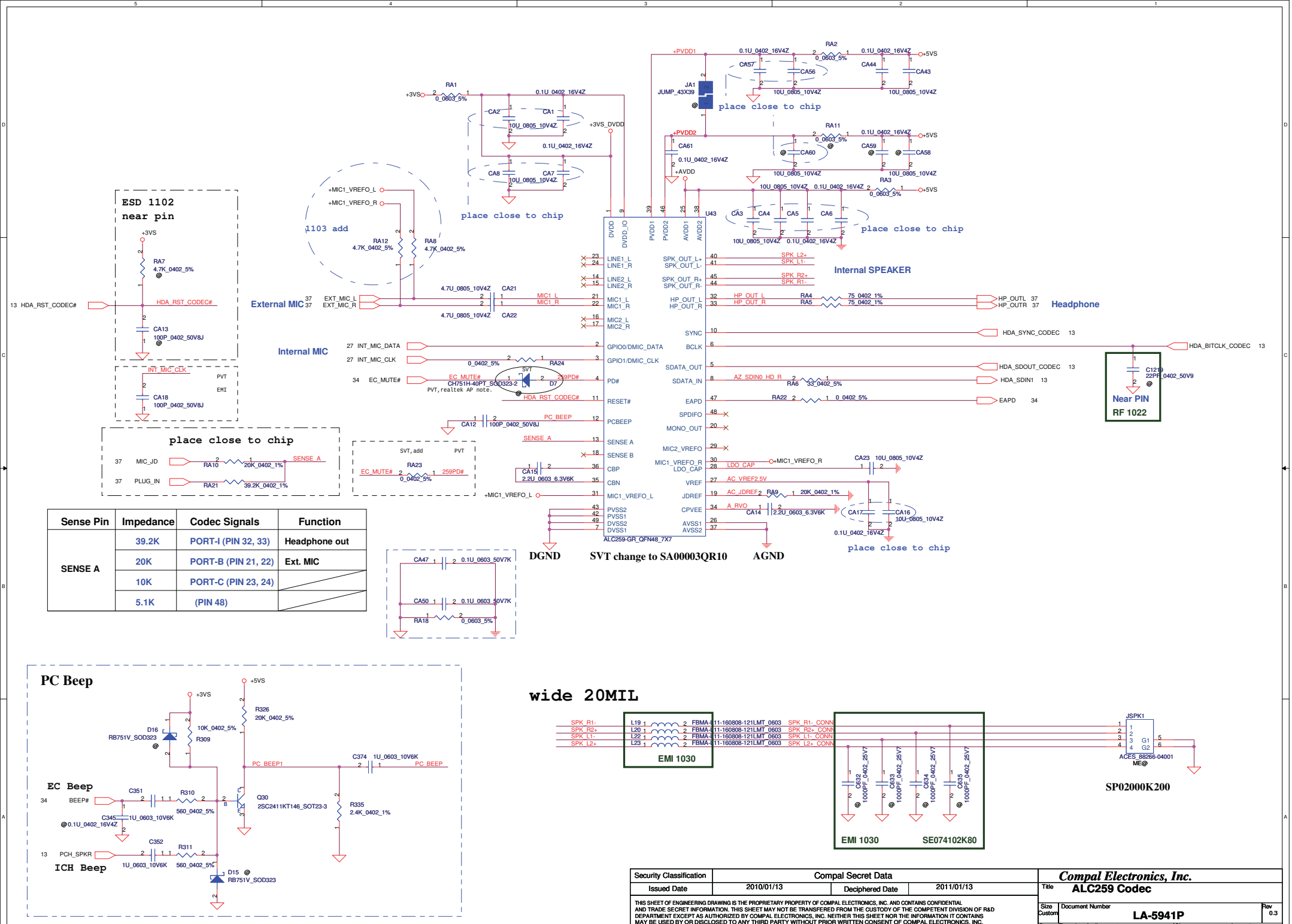


| Sense Pin | Impedance | Codec Signals | Function |
|---|---|---|---|
| SENSE A | 39.2K | PORT-I (PIN 32, 33) | Headphone out |
| | 20K | PORT-B (PIN 21, 22) | Ext. MIC |
| | 10K | PORT-C (PIN 23, 24) | |
| | 5.1K | (PIN 48) | |

| | | | |
|---|---|---|---|
| Security Classification | Compal Secret Data | | |
| Issued Date | 2010/01/13 | Deciphered Date | 2011/01/13 |

THIS SHEET OF ENGINEERING DRAWING IS THE PROPRIETARY PROPERTY OF COMPAL ELECTRONICS, INC. AND CONTAINS CONFIDENTIAL AND TRADE SECRET INFORMATION. THIS SHEET MAY NOT BE TRANSFERED FROM THE CUSTODY OF THE COMPETENT DIVISION OF R&D DEPARTMENT EXCEPT AS AUTHORIZED BY COMPAL ELECTRONICS, INC. NEITHER THIS SHEET NOR THE INFORMATION IT CONTAINS MAY BE USED BY OR DISCLOSED TO ANY THIRD PARTY WITHOUT PRIOR WRITTEN CONSENT OF COMPAL ELECTRONICS, INC.

*Compal Electronics, Inc.*

Title: **ALC259 Codec**

Size: Custom | Document Number: **LA-5941P** | Rev: 0.3

Date: Thursday, April 08, 2010 | Sheet 33 of 50

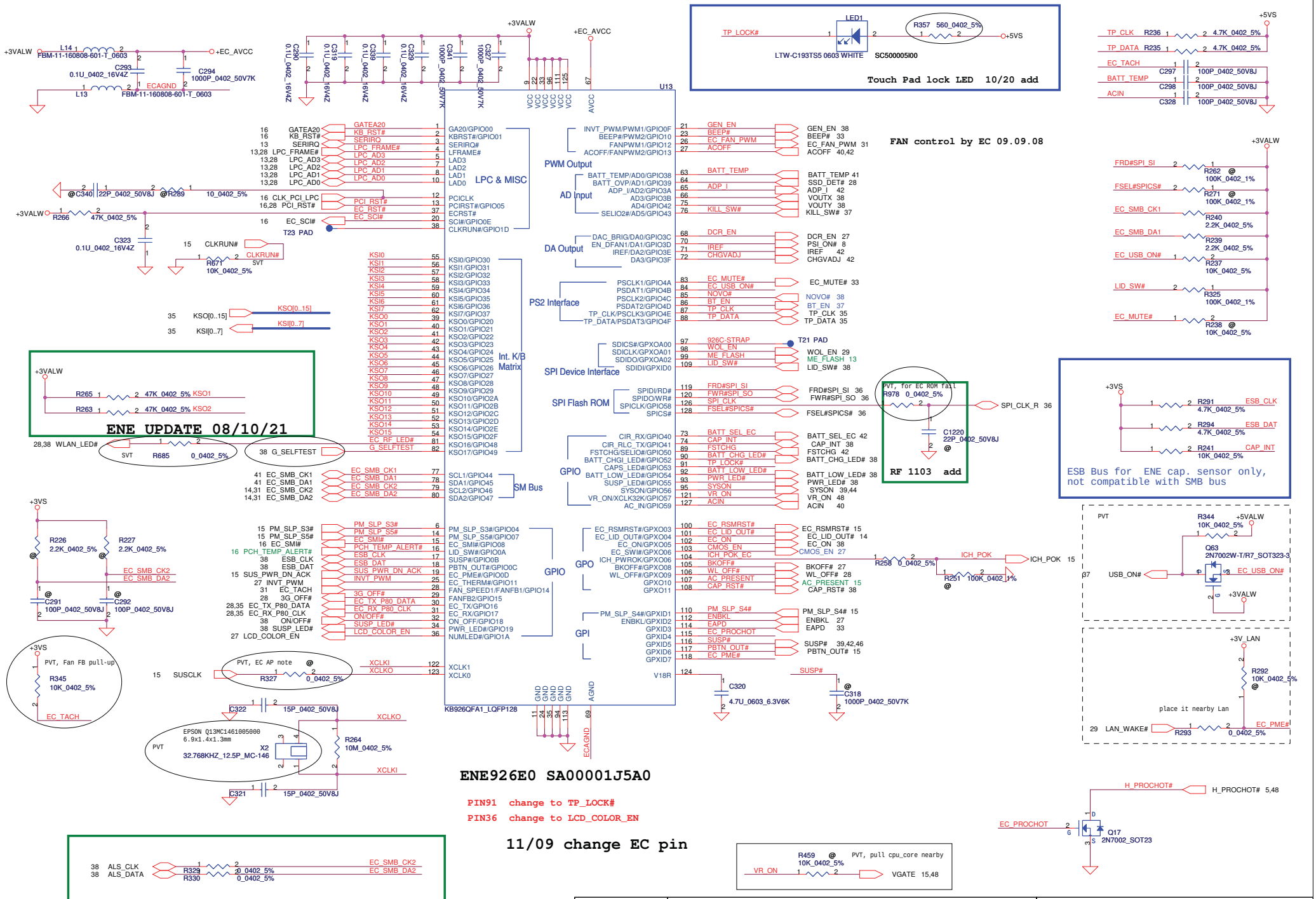


| Security Classification | Compal Secret Data | | |
|---|---|---|---|
| Issued Date | 2010/01/13 | Deciphered Date | 2011/01/13 |

THIS SHEET OF ENGINEERING DRAWING IS THE PROPRIETARY PROPERTY OF COMPAL ELECTRONICS, INC. AND CONTAINS CONFIDENTIAL AND TRADE SECRET INFORMATION. THIS SHEET MAY NOT BE TRANSFERED FROM THE CUSTODY OF THE COMPETENT DIVISION OF R&D DEPARTMENT EXCEPT AS AUTHORIZED BY COMPAL ELECTRONICS, INC. NEITHER THIS SHEET NOR THE INFORMATION IT CONTAINS MAY BE USED BY OR DISCLOSED TO ANY THIRD PARTY WITHOUT PRIOR WRITTEN CONSENT OF COMPAL ELECTRONICS, INC.

**Compal Electronics, Inc.**

Title: **BIOS & EC I/O Port**

Size: Custom | Document Number: **LA-5941P** | Rev: 0.3

Date: Thursday, April 08, 2010 | Sheet 34 of 50

WWW.AliSaler.Com

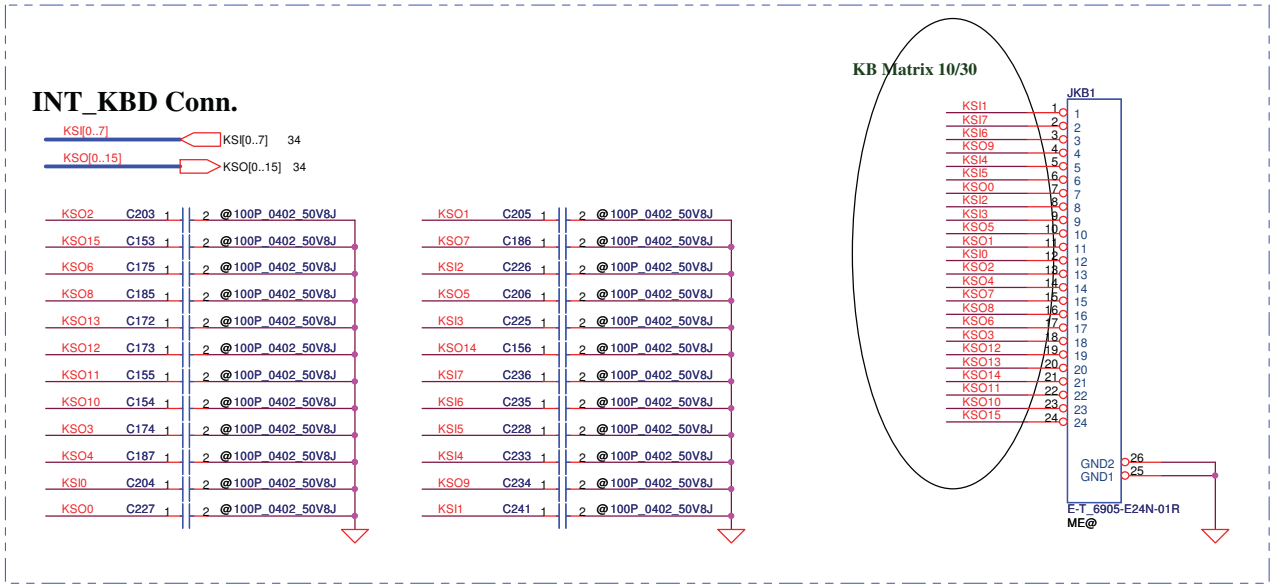


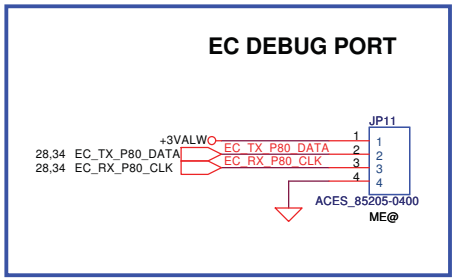


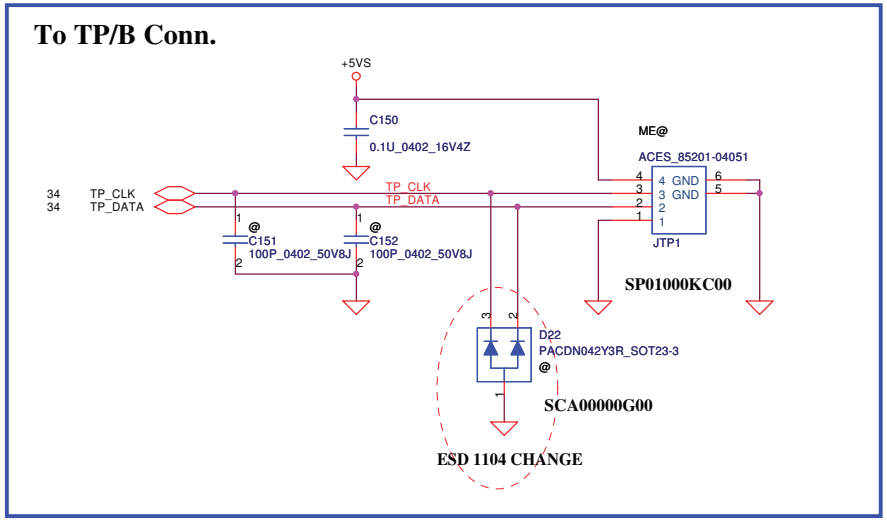


| Security Classification | Compal Secret Data | | |
|---|---|---|---|
| Issued Date | 2010/01/13 | Deciphered Date | 2011/01/13 |

THIS SHEET OF ENGINEERING DRAWING IS THE PROPRIETARY PROPERTY OF COMPAL ELECTRONICS, INC. AND CONTAINS CONFIDENTIAL AND TRADE SECRET INFORMATION. THIS SHEET MAY NOT BE TRANSFERED FROM THE CUSTODY OF THE COMPETENT DIVISION OF R&D DEPARTMENT EXCEPT AS AUTHORIZED BY COMPAL ELECTRONICS, INC. NEITHER THIS SHEET NOR THE INFORMATION IT CONTAINS MAY BE USED BY OR DISCLOSED TO ANY THIRD PARTY WITHOUT PRIOR WRITTEN CONSENT OF COMPAL ELECTRONICS, INC.

**Compal Electronics, Inc.**

Title: **KB /SW /LPC Debug Conn.**

Size: B | Document Number: **LA-5941P** | Rev: 0.3

Date: Thursday, April 08, 2010 | Sheet 35 of 50

## FOR EC 256KB SPI ROM
## (150mil PACKAGE)

20mils

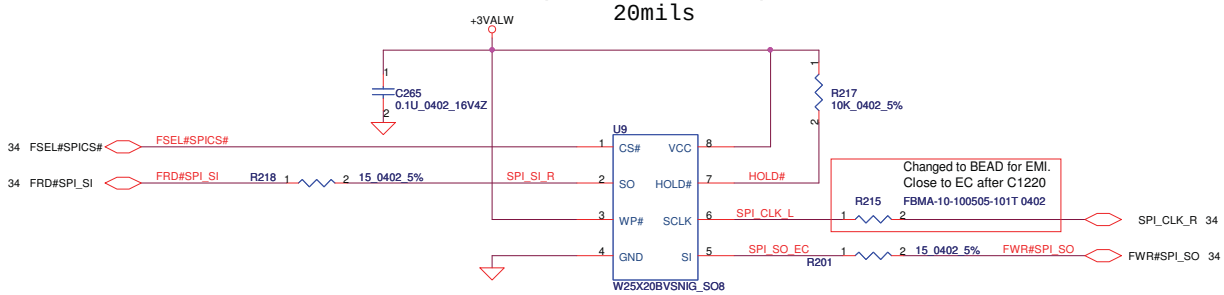


SA00003GM10

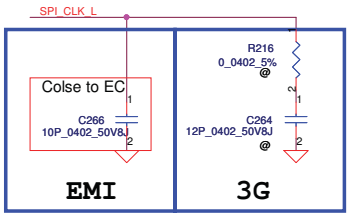


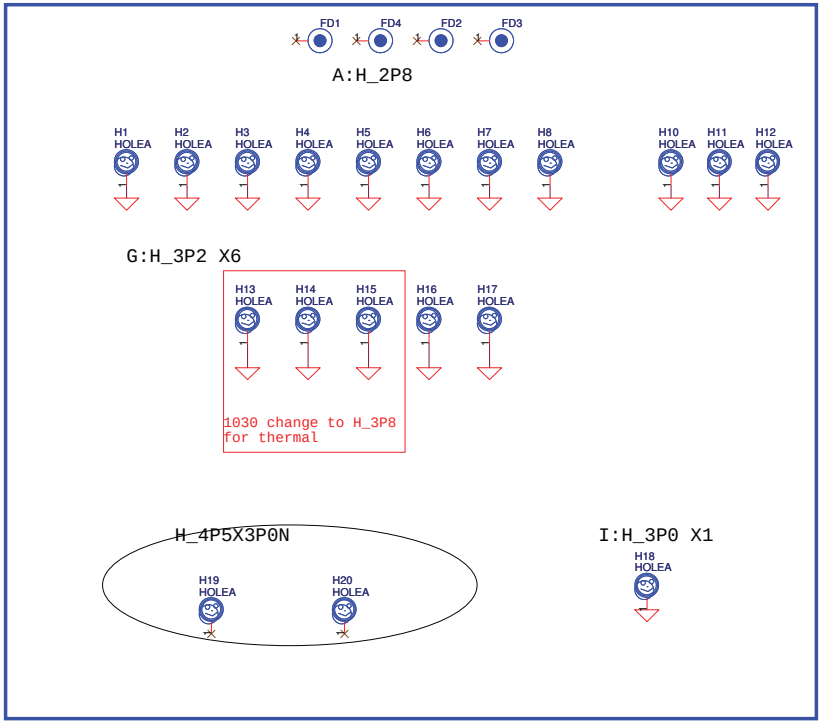


| Security Classification | Compal Secret Data | | |
|---|---|---|---|
| Issued Date | 2010/01/13 | Deciphered Date | 2011/01/13 |

THIS SHEET OF ENGINEERING DRAWING IS THE PROPRIETARY PROPERTY OF COMPAL ELECTRONICS, INC. AND CONTAINS CONFIDENTIAL AND TRADE SECRET INFORMATION. THIS SHEET MAY NOT BE TRANSFERED FROM THE CUSTODY OF THE COMPETENT DIVISION OF R&D DEPARTMENT EXCEPT AS AUTHORIZED BY COMPAL ELECTRONICS, INC. NEITHER THIS SHEET NOR THE INFORMATION IT CONTAINS MAY BE USED BY OR DISCLOSED TO ANY THIRD PARTY WITHOUT PRIOR WRITTEN CONSENT OF COMPAL ELECTRONICS, INC.

**Compal Electronics, Inc.**

Title: **EC SPI ROM**

Size: B | Document Number: **LA-5941P** | Rev: 0.3

Date: Thursday, April 08, 2010 | Sheet 36 of 50

WWW.AliSaler.Com

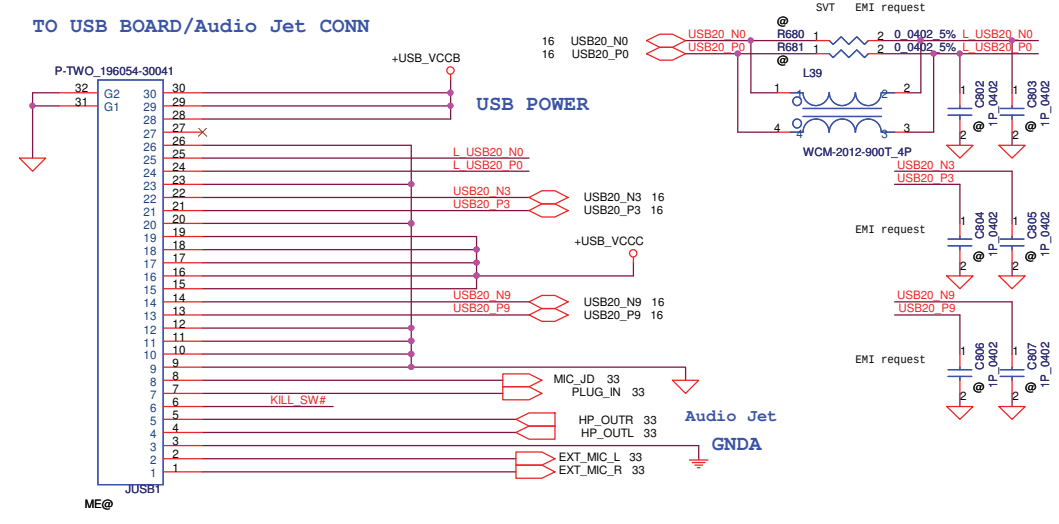


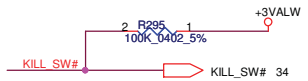


**Kill**

| STATUS | |
|---|---|
| 1,2(LOW) | OFF |
| 2,3(HI) | ON |

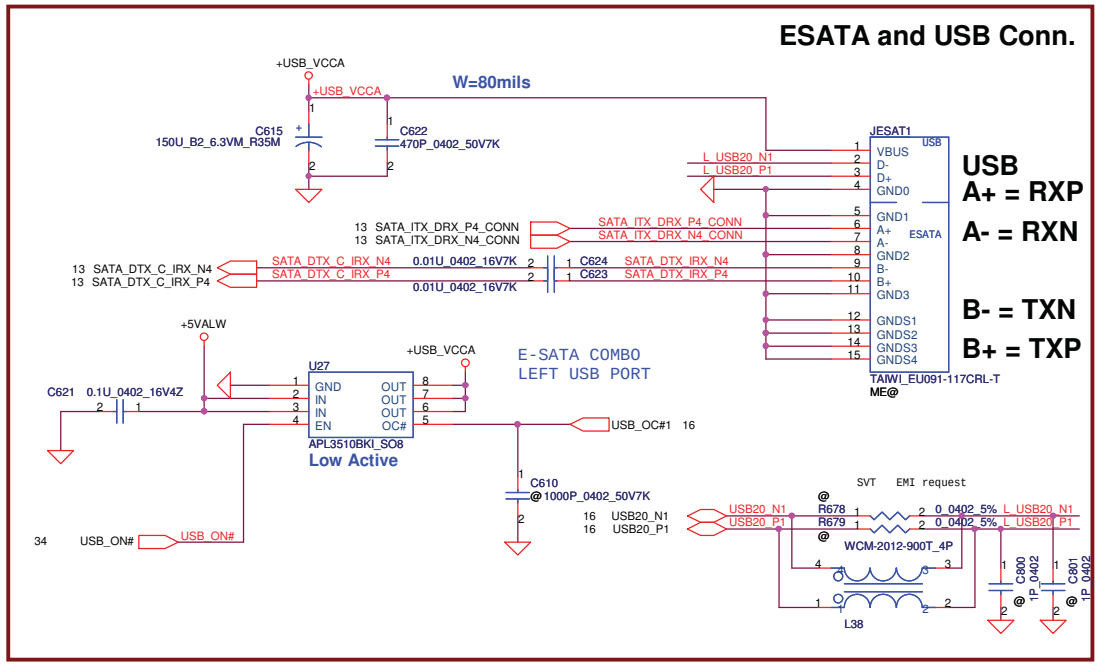


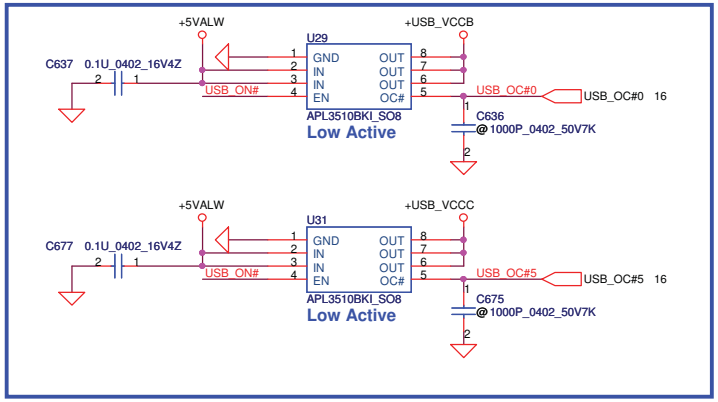


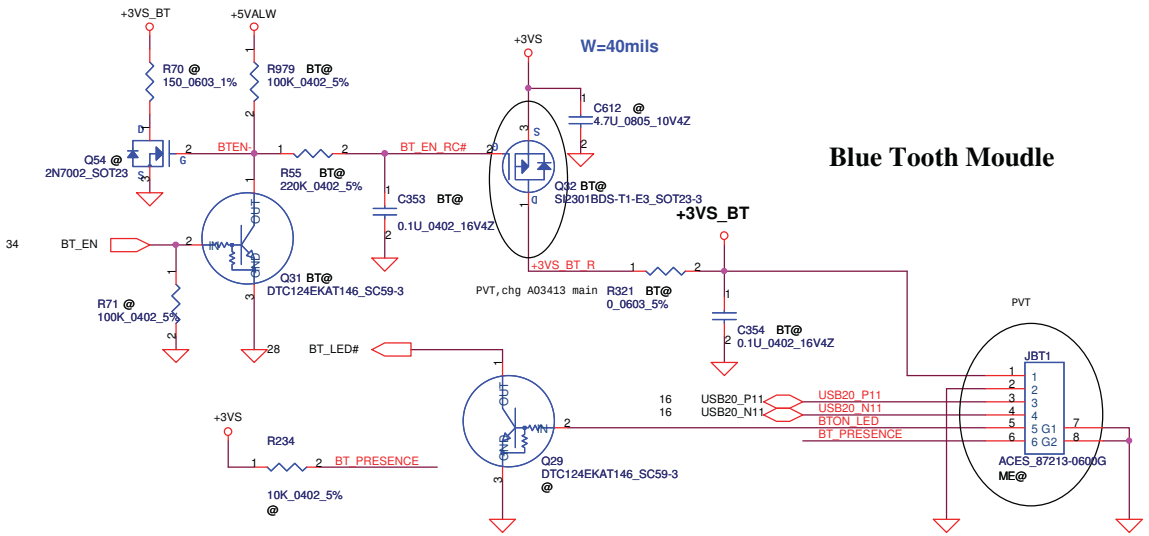


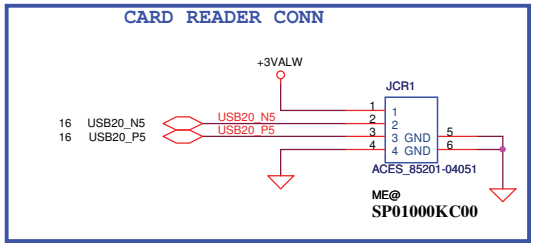


| Security Classification | Compal Secret Data | | |
|---|---|---|---|
| Issued Date | 2010/01/13 | Deciphered Date | 2011/01/13 |

THIS SHEET OF ENGINEERING DRAWING IS THE PROPRIETARY PROPERTY OF COMPAL ELECTRONICS, INC. AND CONTAINS CONFIDENTIAL AND TRADE SECRET INFORMATION. THIS SHEET MAY NOT BE TRANSFERED FROM THE CUSTODY OF THE COMPETENT DIVISION OF R&D DEPARTMENT EXCEPT AS AUTHORIZED BY COMPAL ELECTRONICS, INC. NEITHER THIS SHEET NOR THE INFORMATION IT CONTAINS MAY BE USED BY OR DISCLOSED TO ANY THIRD PARTY WITHOUT PRIOR WRITTEN CONSENT OF COMPAL ELECTRONICS, INC.

**Compal Electronics, Inc.**

Title: USB ports/BT/E-SATA

Size: Custom | Document Number: LA-5941P | Rev: 0.3

Date: Thursday, April 08, 2010 | Sheet 37 of 50

## ON/OFF switch FOR DEBUG

Power Button

TOP Side

Bottom Side

SW1 SMT1-05_4P

+3VALW R272 100K_0402_5%

D14 BAV70W_SOT323-3 PVT

ON/OFFBTN# ON/OFF# ON/OFF# 34

51_ON# 51_ON# 40

34 EC_ON EC_ON Q28 2N7002_SOT23-3

R302 10K_0402_5%

+3VALW R296 100K_0402_5% PVT

34 NOVO# NOVO# 51_ON# D13 BAV70W_SOT323-3 NOVO_BTN#

## Power Bottom Board Conn.4pin

+5VALW JPW1 ACES_85201-04051 ME@ SP01000KC00

34 PWR_LED# ON/OFFBTN#

## NOVOBottom/ALS Board Conn.6pin

+3VALW NOVO_BTN# JFB1 ACES_85201-06051 ME@ SP01000B000

34 ALS_CLK
34 ALS_DATA
34 LID_SW#

NOVO_BTN# D19 PJSOT24C 3P C/A SOT-23 @

ON/OFFBTN# D20 PJSOT24C 3P C/A SOT-23 @

*EMI REQUEST 1ST = SCA00000E00*
*2ST = SCA00000R00*

## Cap Sensor Board Conn. 8pin
## ENE SB3534

+3VS R349 0_0402_5%
+5VS R351 0_0402_5%
+5VS_CAP +3VS_CAP JCAP1 ACES_85201-0805N ME@

13 HDD_LED#
34 CAP_RST#
34 CAP_INT
R3 0_0402_5% I2C_INT_R
34 ESB_DAT
34 ESB_CLK
R2 0_0402_5%
R1 0_0402_5%

C1 33P_0402_50V8J @
C2 33P_0402_50V8J @

PIN adjust

SP01000H200

## FP Board Conn 4 pin

+3VS JFP1 ACES_85201-04051 ME@ SP01000KC00

16 USB20_N10 USB20_N10
16 USB20_P10 USB20_P10

## APS G-Sensor

W=20mils

+3VS_GEN

RG1 GEN@ 47_0402_5% +3VS_GEN_R

CG1 GEN@ 0.1U_0402_16V4Z
CG3 GEN@ 10U_0805_10V4Z

CG2 GEN@ 1U_0603_10V6K

RG3 @ 10K_0402_5%

RG6 GEN@ 100K_0402_5%

34 G_SELFTEST ST

+3VS_GEN +5VALW

RG7 @ 150_0603_1%
RG2 GEN@ 100K_0402_5%

QG2 @ 2N7002_SOT23

GENEN-

RG8 GEN@ 220K_0402_5%

CG4 GEN@ 0.1U_0402_16V4Z

34 GEN_EN

QG3 GEN@ DTC124EKAT146_SC59-3

RG9 @ 100K_0402_5%

+3VS CG9 @ 4.7U_0805_10V4Z

GEN_EN_RC# QG1 GEN@ SI2301BDS-T1-E3_SOT23-3

+3VS_GEN_R

PVT,chg A03413 main

UG1 GEN@ S IC LIS244ALTR LGA 16P G-SENSOR

RG4 GEN@ 56K_0402_5%
RG5 GEN@ 56K_0402_5%
PVT

VOUTX VOUTY 34

CG7 GEN@ 0.1U_0402_16V4Z
CG8 GEN@ 0.1U_0402_16V4Z

## LED CONN 8 pin

Amber
Blue

+5VALW +3VALW +5VS JLED ACES_85201-0805N ME@

34 SUSP_LED#
34 BATT_LOW_LED#
34 BATT_CHG_LED#
28,34 WLAN_LED#

SP01000H200

+1.5VS_VGA +3VS +3VS +3VS
C723 0.1U_0402_16V4Z
C724 0.1U_0402_16V4Z
C725 0.1U_0402_16V4Z
C729 0.1U_0402_16V4Z
+5VALW +5VALW +5VALW +3VALW

+3VS +3VS +3VS +3VS +3VS +1.5VS_VGA
C720 0.1U_0402_16V4Z
C721 0.1U_0402_16V4Z
C722 0.1U_0402_16V4Z
C726 0.1U_0402_16V4Z
C727 0.1U_0402_16V4Z
C728 0.1U_0402_16V4Z
+5VS +5VS +1.05VS +5VS +VGA_CORE +VGA_CORE

WWW.AliSaler.Com

| Security Classification | Compal Secret Data | | |
|---|---|---|---|
| Issued Date | 2010/01/13 | Deciphered Date | 2011/01/13 |

THIS SHEET OF ENGINEERING DRAWING IS THE PROPRIETARY PROPERTY OF COMPAL ELECTRONICS, INC. AND CONTAINS CONFIDENTIAL AND TRADE SECRET INFORMATION. THIS SHEET MAY NOT BE TRANSFERED FROM THE CUSTODY OF THE COMPETENT DIVISION OF R&D DEPARTMENT EXCEPT AS AUTHORIZED BY COMPAL ELECTRONICS, INC. NEITHER THIS SHEET NOR THE INFORMATION IT CONTAINS MAY BE USED BY OR DISCLOSED TO ANY THIRD PARTY WITHOUT PRIOR WRITTEN CONSENT OF COMPAL ELECTRONICS, INC.

*Compal Electronics, Inc.*

Title: Audio Jack & SW connector

Size: Custom | Document Number: LA-5941P | Rev: 0.3

Date: Thursday, April 08, 2010 | Sheet 38 of 50

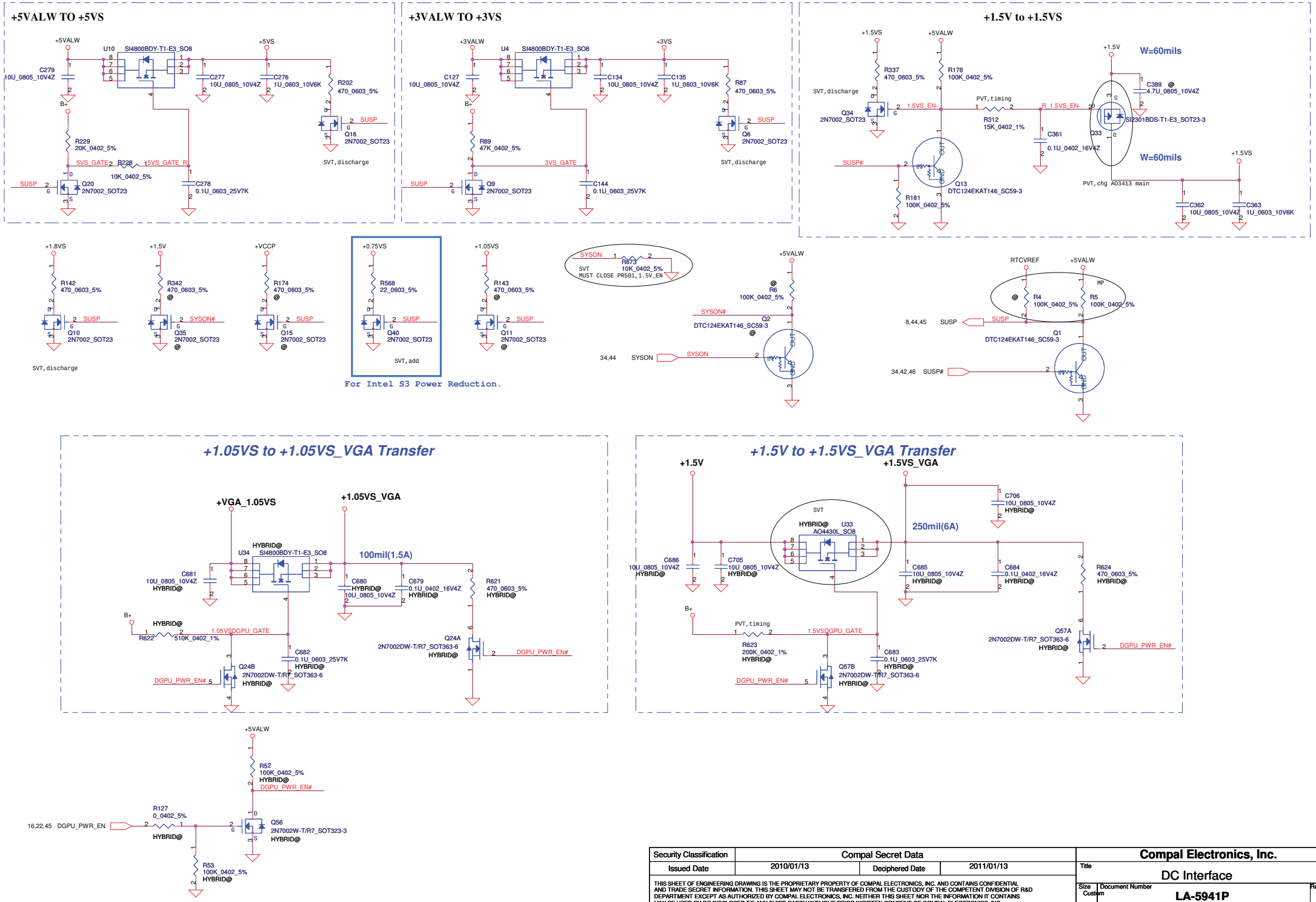


| Security Classification | Compal Secret Data | | |
|---|---|---|---|
| Issued Date | 2010/01/13 | Deciphered Date | 2011/01/13 |

THIS SHEET OF ENGINEERING DRAWING IS THE PROPRIETARY PROPERTY OF COMPAL ELECTRONICS, INC. AND CONTAINS CONFIDENTIAL AND TRADE SECRET INFORMATION. THIS SHEET MAY NOT BE TRANSFERED FROM THE CUSTODY OF THE COMPETENT DIVISION OF R&D DEPARTMENT EXCEPT AS AUTHORIZED BY COMPAL ELECTRONICS, INC. NEITHER THIS SHEET NOR THE INFORMATION IT CONTAINS MAY BE USED BY OR DISCLOSED TO ANY THIRD PARTY WITHOUT PRIOR WRITTEN CONSENT OF COMPAL ELECTRONICS, INC.

**Compal Electronics, Inc.**

Title: DC Interface

Size: Custom | Document Number: LA-5941P | Rev: 0.3

Date: Thursday, April 08, 2010 | Sheet 39 of 50

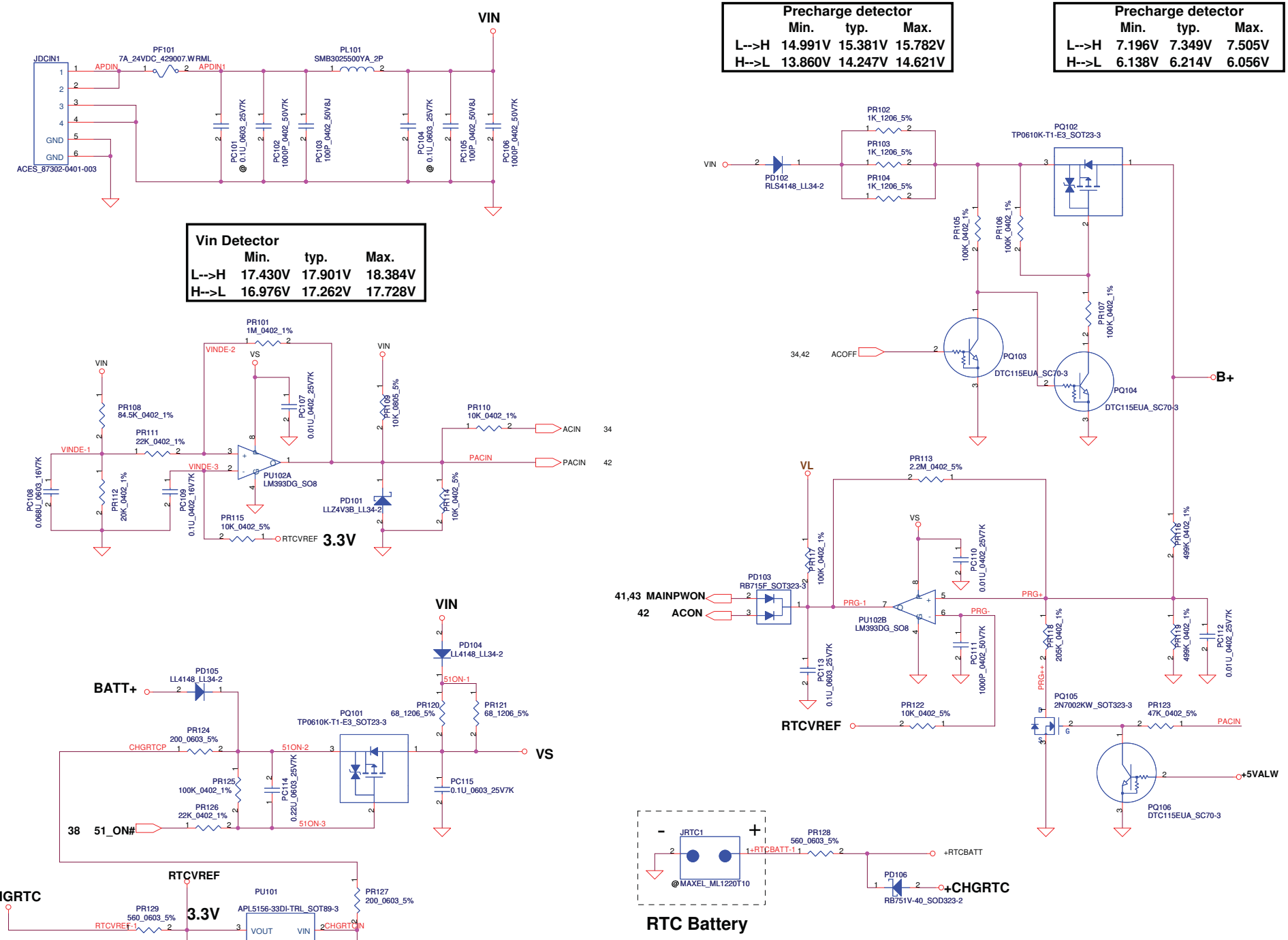


**ACIN**

| Precharge detector | Min. | typ. | Max. |
|---|---|---|---|
| L-->H | 14.991V | 15.381V | 15.782V |
| H-->L | 13.860V | 14.247V | 14.621V |

**BATT ONLY**

| Precharge detector | Min. | typ. | Max. |
|---|---|---|---|
| L-->H | 7.196V | 7.349V | 7.505V |
| H-->L | 6.138V | 6.214V | 6.056V |

**Vin Detector**

| | Min. | typ. | Max. |
|---|---|---|---|
| L-->H | 17.430V | 17.901V | 18.384V |
| H-->L | 16.976V | 17.262V | 17.728V |

WWW.AliSaler.Com

| Security Classification | Compal Secret Data | | |
|---|---|---|---|
| Issued Date | 2010/01/13 | Deciphered Date | 2011/01/13 |

THIS SHEET OF ENGINEERING DRAWING IS THE PROPRIETARY PROPERTY OF COMPAL ELECTRONICS, INC. AND CONTAINS CONFIDENTIAL AND TRADE SECRET INFORMATION. THIS SHEET MAY NOT BE TRANSFERED FROM THE CUSTODY OF THE COMPETENT DIVISION OF R&D DEPARTMENT EXCEPT AS AUTHORIZED BY COMPAL ELECTRONICS, INC. NEITHER THIS SHEET NOR THE INFORMATION IT CONTAINS MAY BE USED BY OR DISCLOSED TO ANY THIRD PARTY WITHOUT PRIOR WRITTEN CONSENT OF COMPAL ELECTRONICS, INC.

**Compal Electronics, Inc.**

Title: DCIN & DETECTOR

Size: Custom | Document Number | Rev: 0.3

Date: Thursday, April 08, 2010 | Sheet 40 of 50

**PH1 under CPU botten side :**
CPU thermal protection at 92 degree C
Recovery at 56 degree C

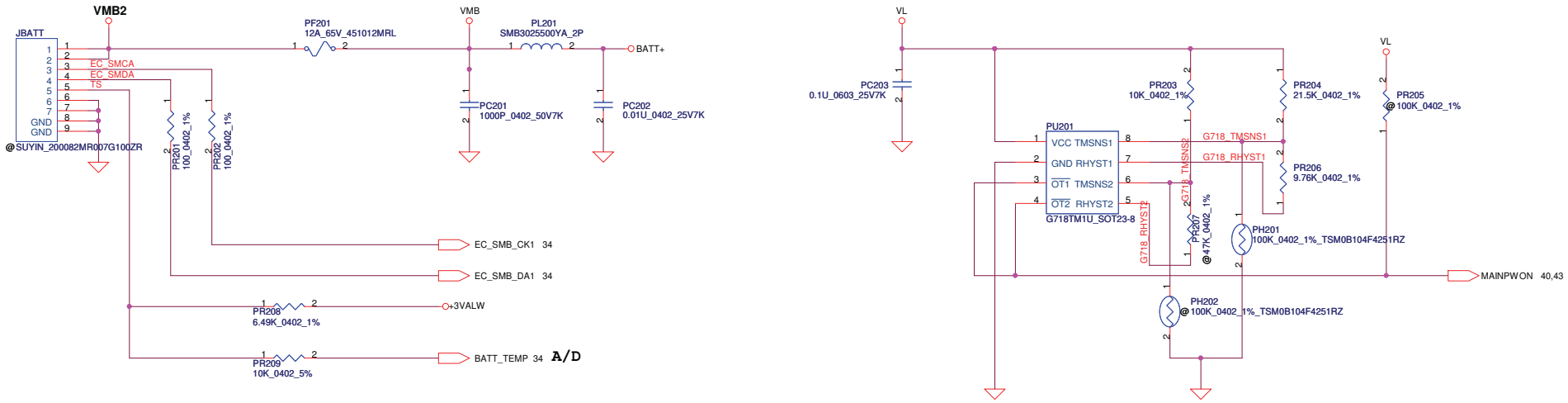


| Security Classification | Compal Secret Data | | |
|---|---|---|---|
| Issued Date | 2010/01/13 | Deciphered Date | 2011/01/13 |

THIS SHEET OF ENGINEERING DRAWING IS THE PROPRIETARY PROPERTY OF COMPAL ELECTRONICS, INC. AND CONTAINS CONFIDENTIAL AND TRADE SECRET INFORMATION. THIS SHEET MAY NOT BE TRANSFERED FROM THE CUSTODY OF THE COMPETENT DIVISION OF R&D DEPARTMENT EXCEPT AS AUTHORIZED BY COMPAL ELECTRONICS, INC. NEITHER THIS SHEET NOR THE INFORMATION IT CONTAINS MAY BE USED BY OR DISCLOSED TO ANY THIRD PARTY WITHOUT PRIOR WRITTEN CONSENT OF COMPAL ELECTRONICS, INC.

**Compal Electronics, Inc.**

Title: BATTERY CONN / OTP

Size | Document Number | Rev 0.3

Date: Thursday, April 08, 2010 | Sheet 41 of 50

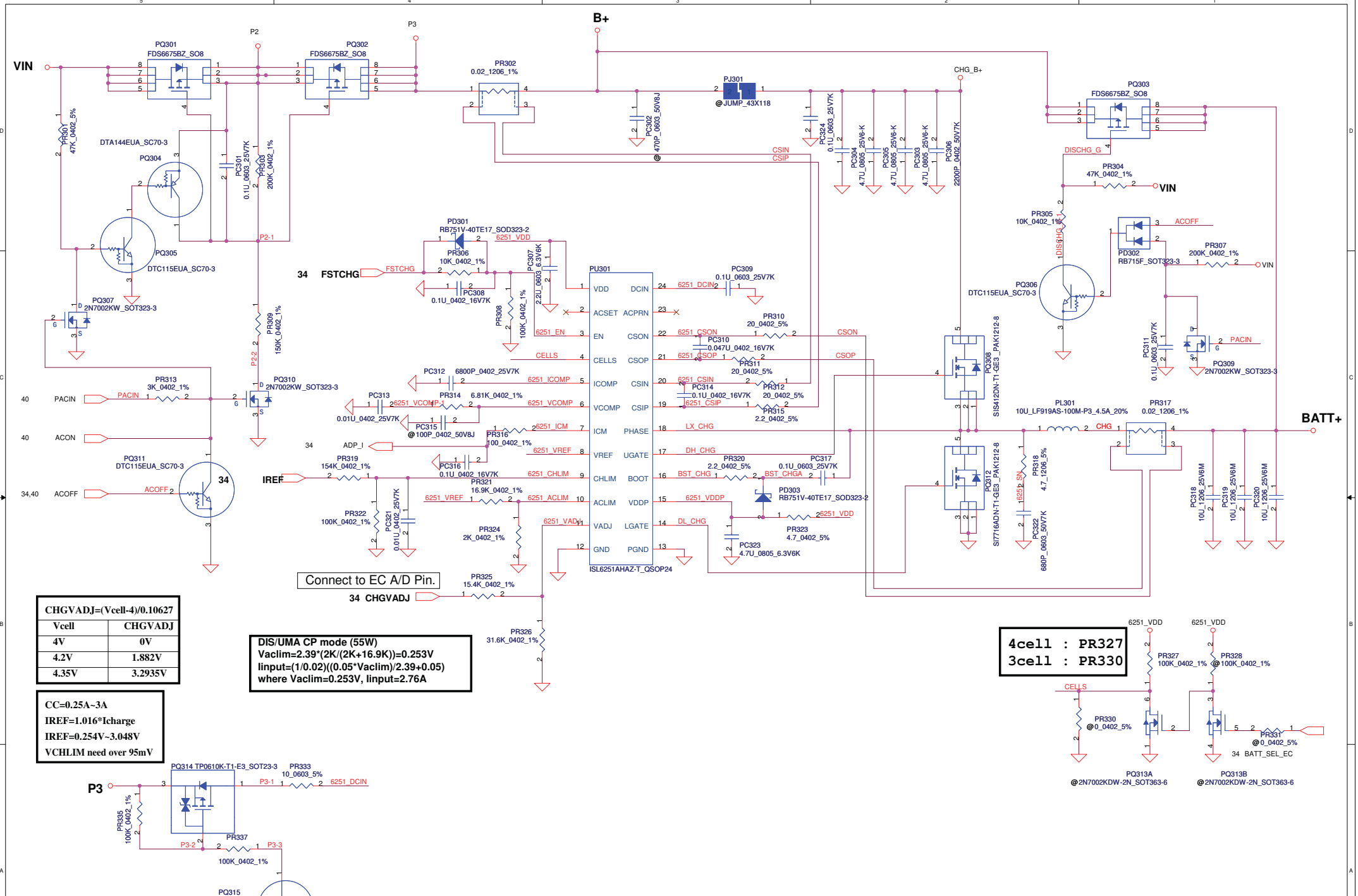


| CHGVADJ=(Vcell-4)/0.10627 | |
|---|---|
| Vcell | CHGVADJ |
| 4V | 0V |
| 4.2V | 1.882V |
| 4.35V | 3.2935V |

CC=0.25A~3A
IREF=1.016*Icharge
IREF=0.254V~3.048V
VCHLIM need over 95mV

DIS/UMA CP mode (55W)
Vaclim=2.39*(2K/(2K+16.9K))=0.253V
Iinput=(1/0.02)((0.05*Vaclim)/2.39+0.05)
where Vaclim=0.253V, Iinput=2.76A

4cell : PR327
3cell : PR330

| Security Classification | Compal Secret Data | | |
|---|---|---|---|
| Issued Date | 2010/01/13 | Deciphered Date | 2011/01/13 |

THIS SHEET OF ENGINEERING DRAWING IS THE PROPRIETARY PROPERTY OF COMPAL ELECTRONICS, INC. AND CONTAINS CONFIDENTIAL AND TRADE SECRET INFORMATION. THIS SHEET MAY NOT BE TRANSFERED FROM THE CUSTODY OF THE COMPETENT DIVISION OF R&D DEPARTMENT EXCEPT AS AUTHORIZED BY COMPAL ELECTRONICS, INC. NEITHER THIS SHEET NOR THE INFORMATION IT CONTAINS MAY BE USED BY OR DISCLOSED TO ANY THIRD PARTY WITHOUT PRIOR WRITTEN CONSENT OF COMPAL ELECTRONICS, INC.

**Compal Electronics, Inc.**

Title: CHARGER

Size | Document Number | Rev 0.3

Date: Thursday, April 08, 2010 | Sheet 42 of 50

WWW.AliSaler.Com

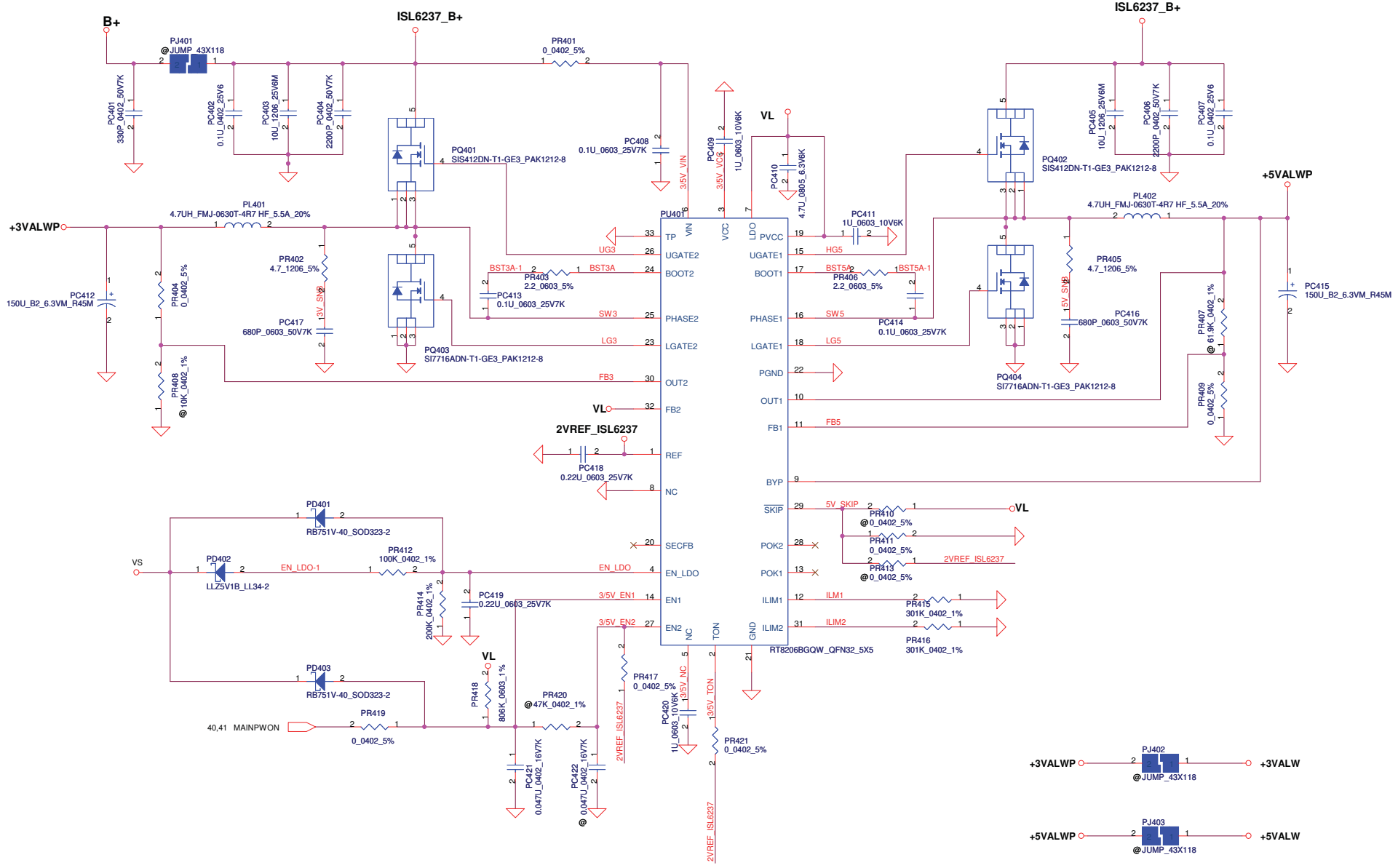


| Security Classification | Compal Secret Data | | |
|---|---|---|---|
| Issued Date | 2010/01/13 | Deciphered Date | 2011/01/13 |

THIS SHEET OF ENGINEERING DRAWING IS THE PROPRIETARY PROPERTY OF COMPAL ELECTRONICS, INC. AND CONTAINS CONFIDENTIAL AND TRADE SECRET INFORMATION. THIS SHEET MAY NOT BE TRANSFERED FROM THE CUSTODY OF THE COMPETENT DIVISION OF R&D DEPARTMENT EXCEPT AS AUTHORIZED BY COMPAL ELECTRONICS, INC. NEITHER THIS SHEET NOR THE INFORMATION IT CONTAINS MAY BE USED BY OR DISCLOSED TO ANY THIRD PARTY WITHOUT PRIOR WRITTEN CONSENT OF COMPAL ELECTRONICS, INC.

**Compal Electronics, Inc.**

Title: 3VALW/5VALW

Size: Custom | Document Number | Rev: 0.3

Date: Thursday, April 08, 2010 | Sheet 43 of 50

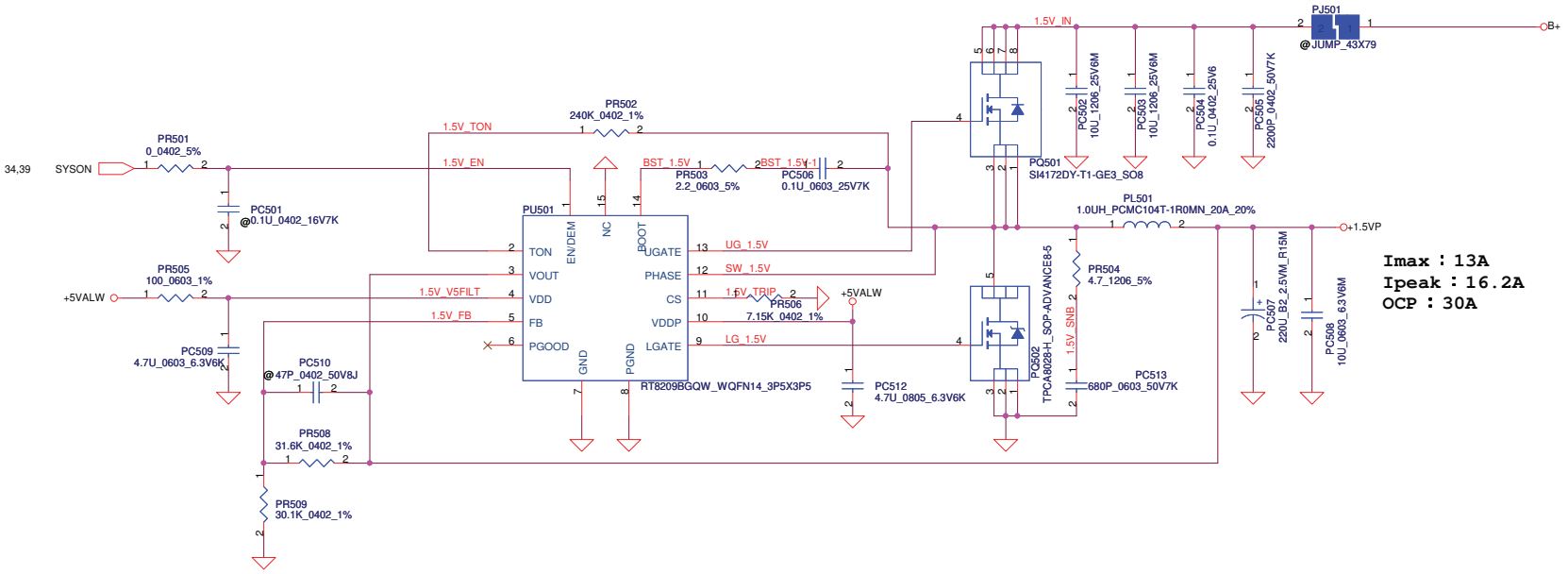


Imax : 13A
Ipeak : 16.2A
OCP : 30A

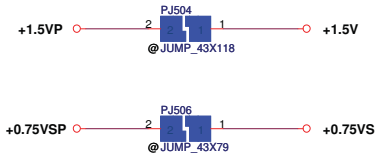


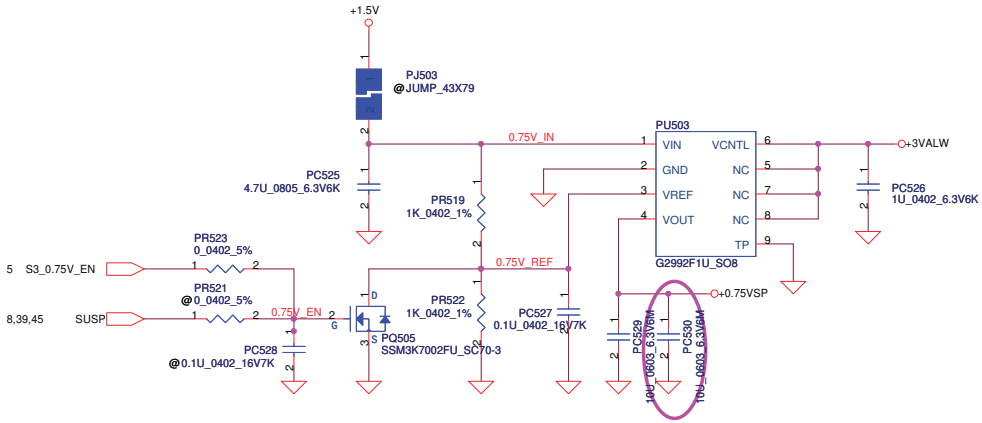


| Security Classification | Compal Secret Data | | |
|---|---|---|---|
| Issued Date | 2010/01/13 | Deciphered Date | 2011/01/13 |

THIS SHEET OF ENGINEERING DRAWING IS THE PROPRIETARY PROPERTY OF COMPAL ELECTRONICS, INC. AND CONTAINS CONFIDENTIAL AND TRADE SECRET INFORMATION. THIS SHEET MAY NOT BE TRANSFERED FROM THE CUSTODY OF THE COMPETENT DIVISION OF R&D DEPARTMENT EXCEPT AS AUTHORIZED BY COMPAL ELECTRONICS, INC. NEITHER THIS SHEET NOR THE INFORMATION IT CONTAINS MAY BE USED BY OR DISCLOSED TO ANY THIRD PARTY WITHOUT PRIOR WRITTEN CONSENT OF COMPAL ELECTRONICS, INC.

**Compal Electronics, Inc.**

Title: 1.5V/0.75VS

Size | Document Number | Rev 0.3

Date: Thursday, April 08, 2010 | Sheet 44 of 50

WWW.AliSaler.Com

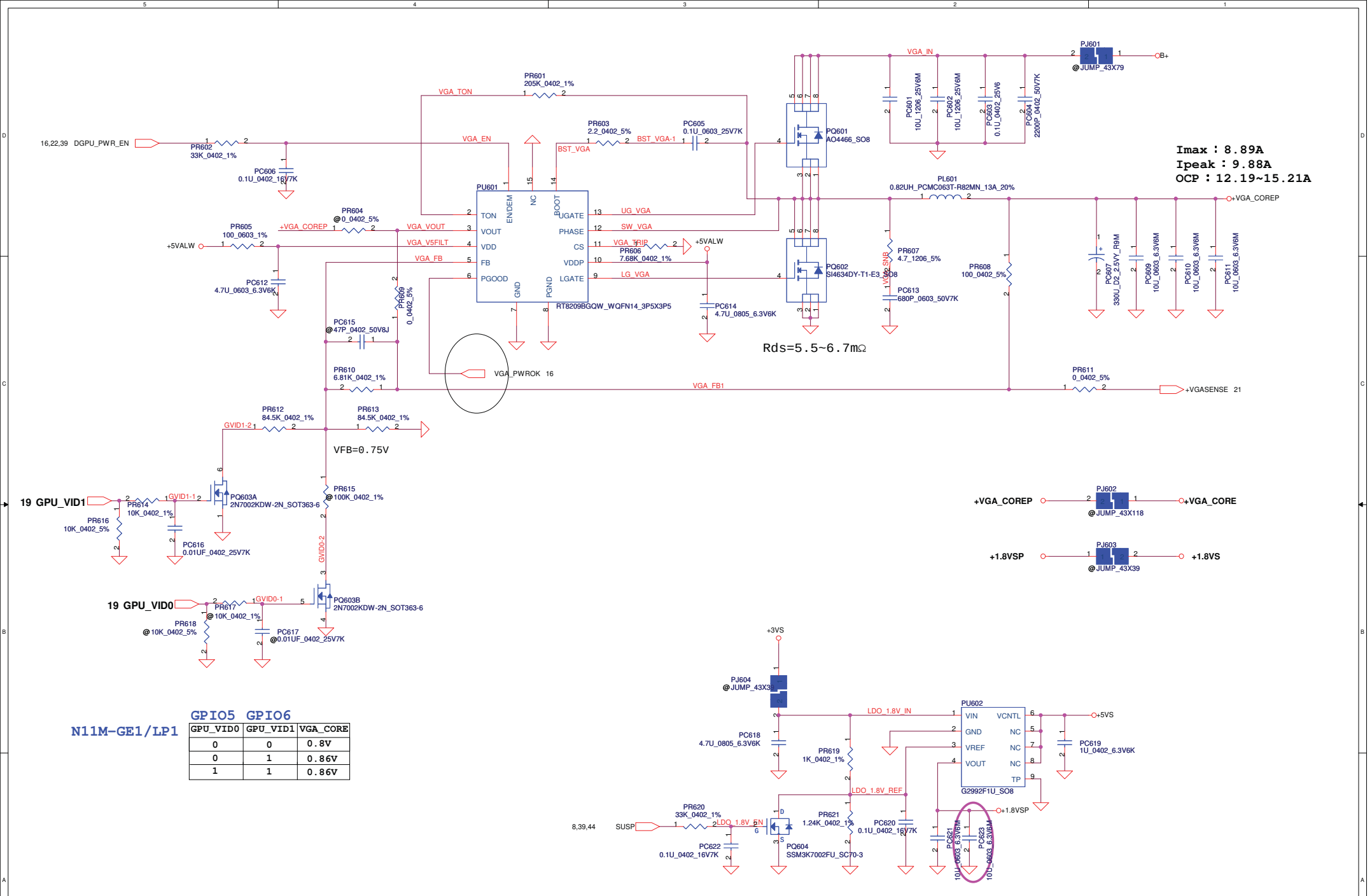


N11M-GE1/LP1

| GPIO5 | GPIO6 | |
|---|---|---|
| GPU_VID0 | GPU_VID1 | VGA_CORE |
| 0 | 0 | 0.8V |
| 0 | 1 | 0.86V |
| 1 | 1 | 0.86V |

| | | | |
|---|---|---|---|
| Security Classification | Compal Secret Data | | |
| Issued Date | 2010/01/13 | Deciphered Date | 2011/01/13 |

THIS SHEET OF ENGINEERING DRAWING IS THE PROPRIETARY PROPERTY OF COMPAL ELECTRONICS, INC. AND CONTAINS CONFIDENTIAL AND TRADE SECRET INFORMATION. THIS SHEET MAY NOT BE TRANSFERED FROM THE CUSTODY OF THE COMPETENT DIVISION OF R&D DEPARTMENT EXCEPT AS AUTHORIZED BY COMPAL ELECTRONICS, INC. NEITHER THIS SHEET NOR THE INFORMATION IT CONTAINS MAY BE USED BY OR DISCLOSED TO ANY THIRD PARTY WITHOUT PRIOR WRITTEN CONSENT OF COMPAL ELECTRONICS, INC.

**Compal Electronics, Inc.**

Title: VGA_CORE/1.8VS/1.1VS

Size | Document Number | Rev 0.3

Date: Thursday, April 08, 2010 | Sheet 45 of 50

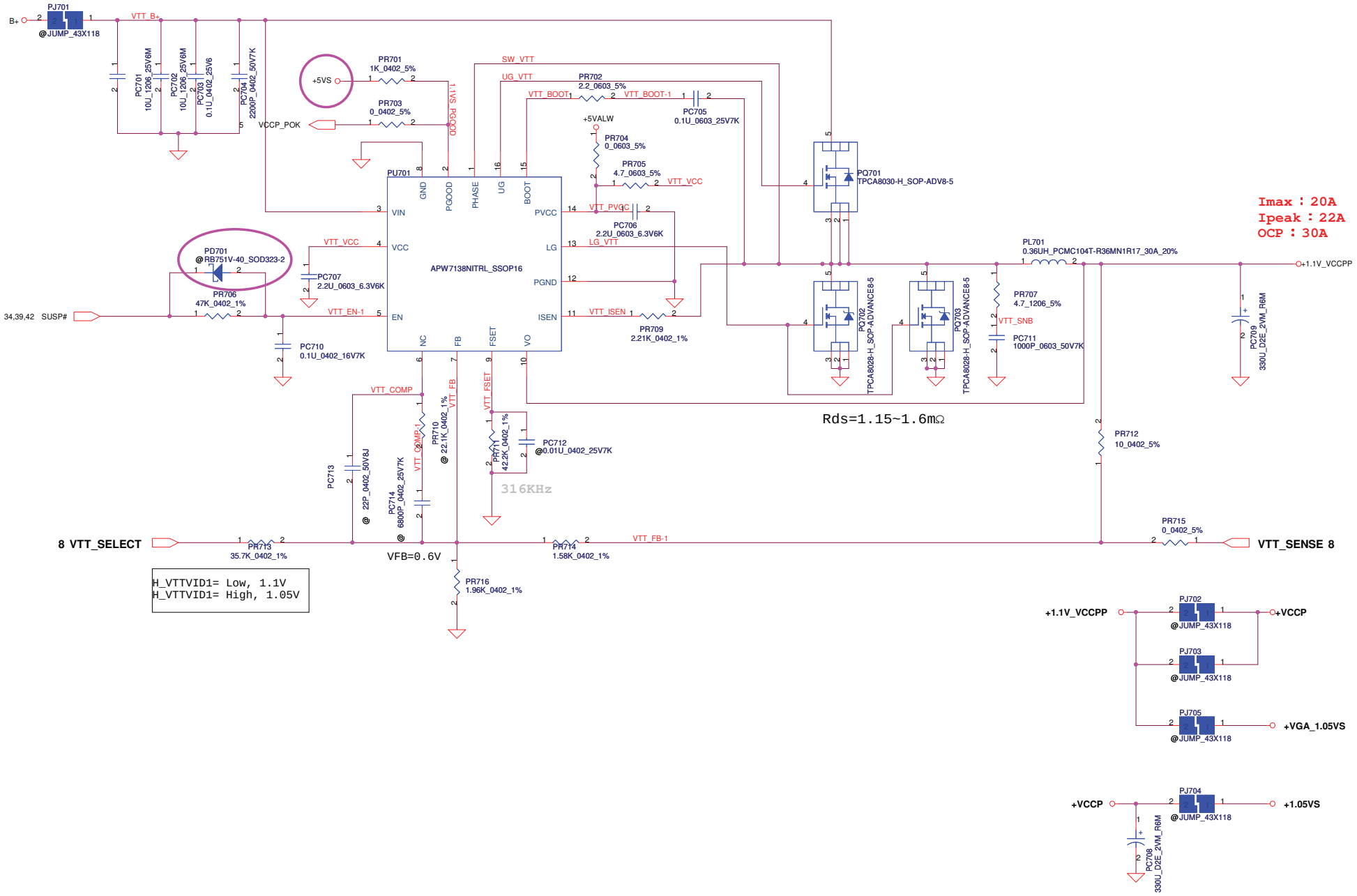


| Security Classification | Compal Secret Data | | |
|---|---|---|---|
| Issued Date | 2010/01/13 | Deciphered Date | 2011/01/13 |

THIS SHEET OF ENGINEERING DRAWING IS THE PROPRIETARY PROPERTY OF COMPAL ELECTRONICS, INC. AND CONTAINS CONFIDENTIAL AND TRADE SECRET INFORMATION. THIS SHEET MAY NOT BE TRANSFERED FROM THE CUSTODY OF THE COMPETENT DIVISION OF R&D DEPARTMENT EXCEPT AS AUTHORIZED BY COMPAL ELECTRONICS, INC. NEITHER THIS SHEET NOR THE INFORMATION IT CONTAINS MAY BE USED BY OR DISCLOSED TO ANY THIRD PARTY WITHOUT PRIOR WRITTEN CONSENT OF COMPAL ELECTRONICS, INC.

**Compal Electronics, Inc.**

Title: +1.1VS_VTT

Size: Custom | Document Number | Rev: 0.3

Date: Thursday, April 08, 2010 | Sheet 46 of 50

WWW.AliSaler.Com

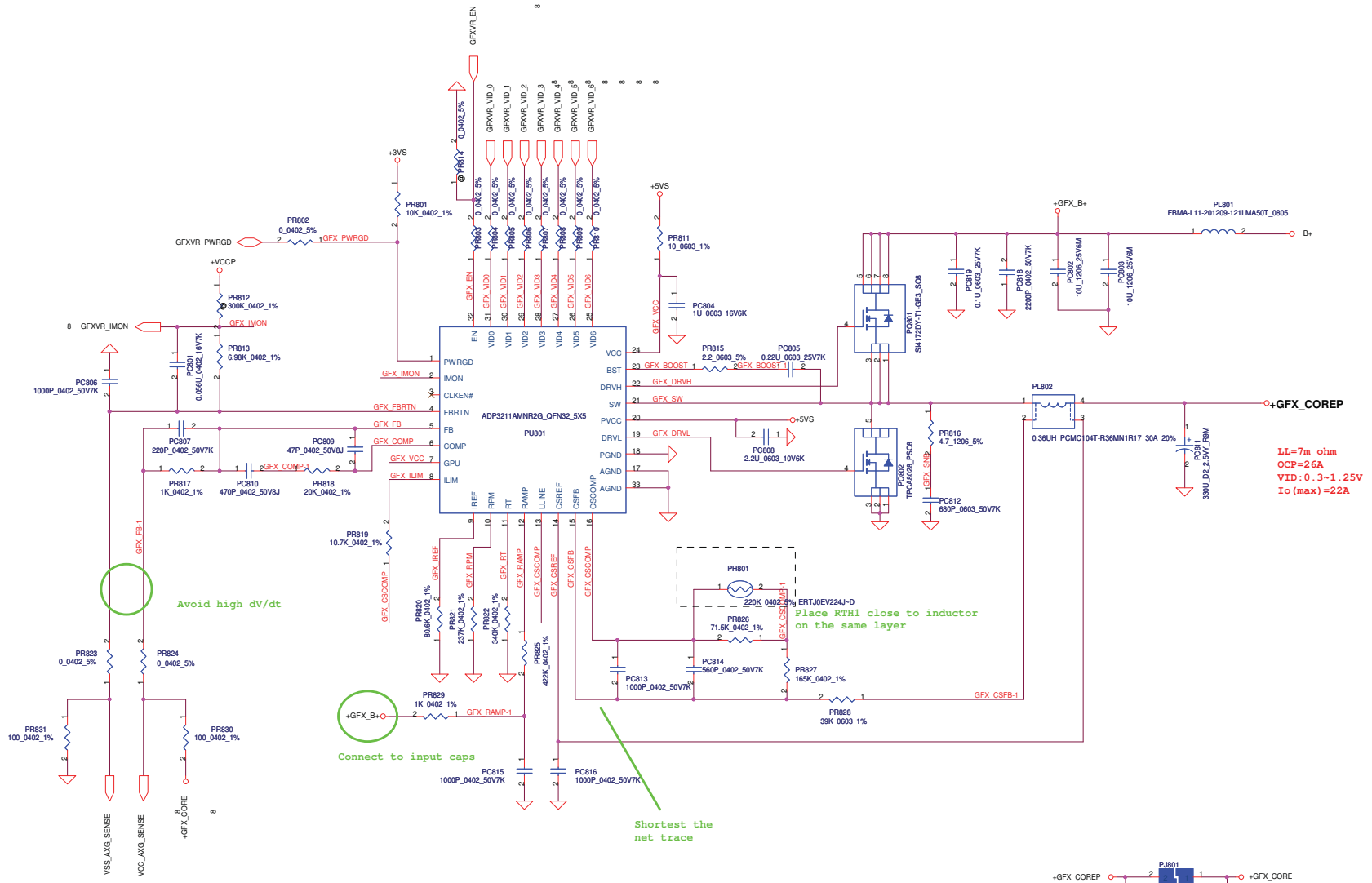


| Security Classification | Compal Secret Data | | |
|---|---|---|---|
| Issued Date | 2010/01/13 | Deciphered Date | 2011/01/13 |

THIS SHEET OF ENGINEERING DRAWING IS THE PROPRIETARY PROPERTY OF COMPAL ELECTRONICS, INC. AND CONTAINS CONFIDENTIAL AND TRADE SECRET INFORMATION. THIS SHEET MAY NOT BE TRANSFERED FROM THE CUSTODY OF THE COMPETENT DIVISION OF R&D DEPARTMENT EXCEPT AS AUTHORIZED BY COMPAL ELECTRONICS, INC. NEITHER THIS SHEET NOR THE INFORMATION IT CONTAINS MAY BE USED BY OR DISCLOSED TO ANY THIRD PARTY WITHOUT PRIOR WRITTEN CONSENT OF COMPAL ELECTRONICS, INC.

**Compal Electronics, Inc.**

Title: **GFX_CORE**

Size | Document Number | Rev 0.3

Date: Thursday, April 08, 2010 | Sheet 47 of 50

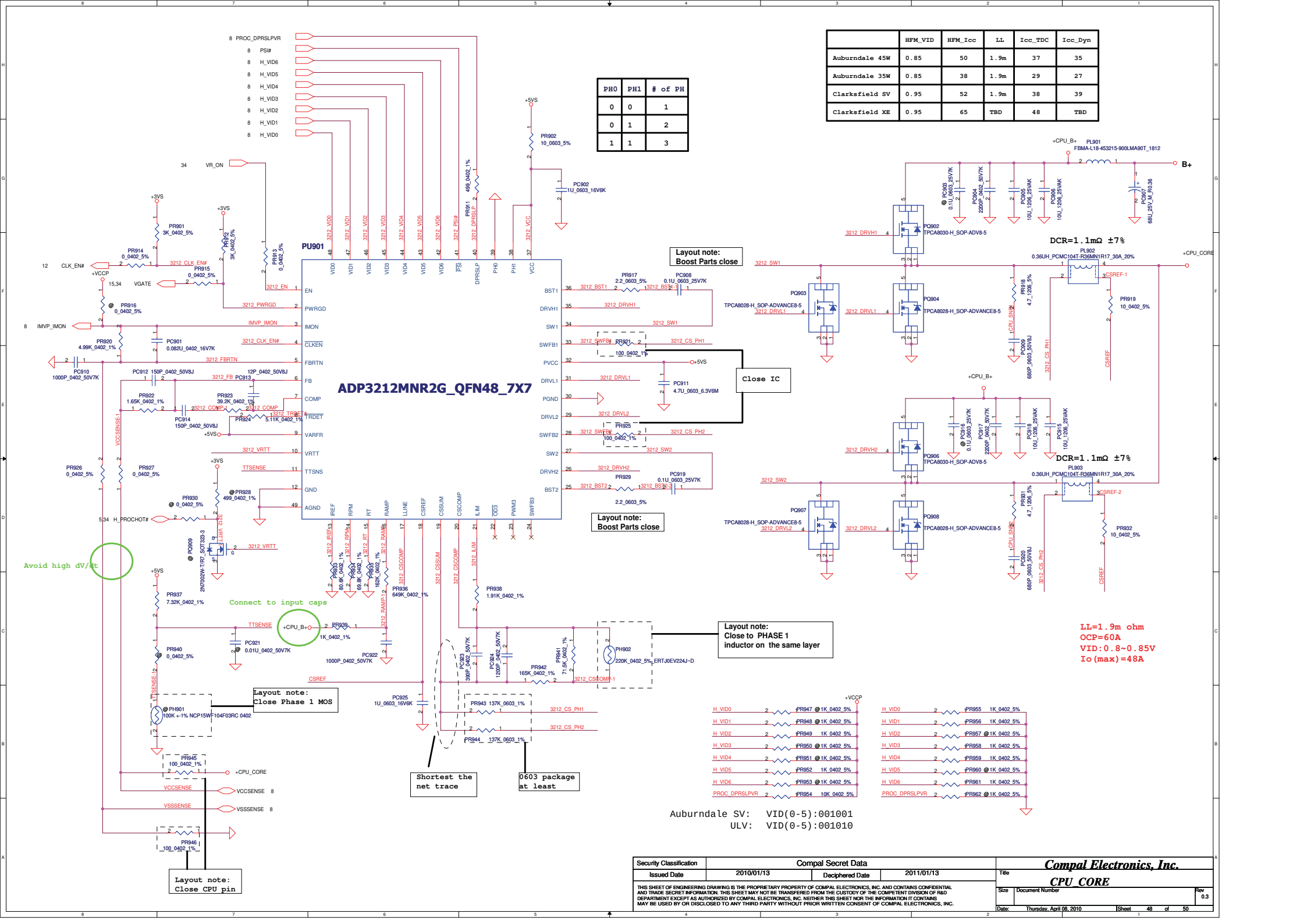


| PH0 | PH1 | # of PH |
|---|---|---|
| 0 | 0 | 1 |
| 0 | 1 | 2 |
| 1 | 1 | 3 |

| | HFM_VID | HFM_Icc | LL | Icc_TDC | Icc_Dyn |
|---|---|---|---|---|---|
| Auburndale 45W | 0.85 | 50 | 1.9m | 37 | 35 |
| Auburndale 35W | 0.85 | 38 | 1.9m | 29 | 27 |
| Clarksfield SV | 0.95 | 52 | 1.9m | 38 | 39 |
| Clarksfield XE | 0.95 | 65 | TBD | 48 | TBD |

| Security Classification | Compal Secret Data | | |
|---|---|---|---|
| Issued Date | 2010/01/13 | Deciphered Date | 2011/01/13 |

THIS SHEET OF ENGINEERING DRAWING IS THE PROPRIETARY PROPERTY OF COMPAL ELECTRONICS, INC. AND CONTAINS CONFIDENTIAL AND TRADE SECRET INFORMATION. THIS SHEET MAY NOT BE TRANSFERED FROM THE CUSTODY OF THE COMPETENT DIVISION OF R&D DEPARTMENT EXCEPT AS AUTHORIZED BY COMPAL ELECTRONICS, INC. NEITHER THIS SHEET NOR THE INFORMATION IT CONTAINS MAY BE USED BY OR DISCLOSED TO ANY THIRD PARTY WITHOUT PRIOR WRITTEN CONSENT OF COMPAL ELECTRONICS, INC.

Compal Electronics, Inc.

Title: CPU_CORE

Size | Document Number | Rev 0.3

Date: Thursday, April 08, 2010 | Sheet 48 of 50

# Version change list (P.I.R. List)



| Item | Reason for change | PG# | Modify List | Date | Phase |
|---|---|---|---|---|---|
| 1 | Add S3_0.75V_EN for 0.75 enable singal | 44 | Add PR523 and reserve PR521 | 11/09 | Before A |
| 2 | Modify VGA GPIO table for NVIDIA SPEC. | 45 | Reserve PR615, PR617, PR618 and PC617<br>PR612, PR613 change to 84.5K from 100K | 11/09 | Before A |
| 3 | | | | | |
| 4 | | | | | |
| 5 | | | | | |
| 6 | | | | | |
| 7 | | | | | |
| 8 | | | | | |
| 9 | | | | | |
| 10 | | | | | |
| 11 | | | | | |
| 12 | | | | | |
| 13 | | | | | |
| 14 | | | | | |
| 15 | | | | | |
| 16 | | | | | |
| 17 | | | | 20081022 | |

| Security Classification | Compal Secret Data | | |
|---|---|---|---|
| Issued Date | 2009/01/06 | Deciphered Date | 2009/01/06 |

THIS SHEET OF ENGINEERING DRAWING IS THE PROPRIETARY PROPERTY OF COMPAL ELECTRONICS, INC. AND CONTAINS CONFIDENTIAL AND TRADE SECRET INFORMATION. THIS SHEET MAY NOT BE TRANSFERED FROM THE CUSTODY OF THE COMPETENT DIVISION OF R&D DEPARTMENT EXCEPT AS AUTHORIZED BY COMPAL ELECTRONICS, INC. NEITHER THIS SHEET NOR THE INFORMATION IT CONTAINS MAY BE USED BY OR DISCLOSED TO ANY THIRD PARTY WITHOUT PRIOR WRITTEN CONSENT OF COMPAL ELECTRONICS, INC.

| NO | DATE | PAGE | MODIFICATION LIST | PURPOSE |
|---|---|---|---|---|
| | | | VER. R0_1030 | |
| 1 | | 30 | RJ45 CONNECTOR | |
| 2 | | 35 | KB Matrix change | |
| 3 | | 31 | EMC1403-1 change to EMC1403-2 | |
| 4 | | 40,42 | POWER modify PQ313,PU102 | |
| 5 | | | change USB port FP : port10 | |
| 6 | | | USB3 : port 9 | |
| 7 | | | change USB power | |
| | | 1102D MODIFY | | |
| 8 | | 33 | Add RA7,CA13 | FOR ESD |
| 9 | | 35 | Add D22 | |
| 10 | | 38 | JFIR CONN. CHANGE TO 12 PIN | |
| 11 | | 36 | CHANGE NET NAME | |
| 12 | | 27 | JLVDS1 CONN. PIN SWAP. | |
| 13 | | 13 | DEL CLRP1 | |
| 14 | | 1104DMODIFY | | |
| 15 | | 16 | Add U15,R173,R177,R178,R627,R628 | |
| 16 | | 1105DMODIFY | | |
| 17 | | 28 | Add Q44,Q45,Q49,Q55,Q60,Q62,R336 | |
| 18 | | 26 | Add Q61,Q63 | |
| 19 | | 29 | R726 change to 0805 | |
| 20 | | 25 | Add R559 | |
| 21 | | 15 | Add R180 | |
| 22 | | 14 | Add T24 PAD,T25 PAD | |
| 23 | | 8 | Add R282 | |
| 24 | | 14 | Add R327,R325,T21 PAD | |
| | | 1109DMODIFY | | |
| 25 | | 14 | Del R81,R83 | |
| 26 | | 16 | Add T26 PAD,C687 | |
| 27 | | 27 | Add R371,R372 | |
| 28 | | 34 | Del Q26,R303 T21PAD | |
| | | | Add R230,Q17 | |
| 29 | | 26 | Del Q61,Q63 Add Q99A,Q99B | |
| | | 5 | Add Q61,R416 | |
| | | | JFIR CONN change JLED CONN | |
| | | 34 | add TP29,R320,R328,R230 | |

| NO | DATE | PAGE | MODIFICATION LIST | PURPOSE |
|---|---|---|---|---|
| 1 | MP | 15 | Add R687,R688 | Intel DG |
| 2 | MP | 39 | Add R5, Del R4 | S5 power lost |

| NO | DATE | PAGE | MODIFICATION LIST | PURPOSE |
|---|---|---|---|---|
| 1 | PVT | 24 | HDMI connector change to DIP type | DFB request |
| 2 | PVT | 28 | R336 change to 100Kohm | BOM error |
| 3 | PVT | 38 | D13,D14 change to panjit | cost down |
| 4 | PVT | 38 | RG4,RG5 chagne 56k ohm | RC filter for G-sensor output, EC request. |
| 5 | PVT | 37 | JBT1 change to 6 pin | For 6 pin BT module |
| 6 | PVT | 34 | SUSCLK connect to clock out | EC issued change note. |
| 7 | PVT | 34 | R978 45 to 0 ohm | For ECROM can't flash |
| 8 | PVT | 34 | Add Q63 2N7002, R344 10K | USB Power pulse when AC in, bug |
| 9 | PVT | 34 | Add net CLKRUN# on pin38 | reserve for power saving |
| 10 | PVT | 34 | 32.768KHz change to 70x15x1.4 | cost down |
| 11 | PVT | 13 | 32.768KHz change to 70x15x1.4 | cost down |
| 12 | PVT | 33 | INT_MIC_CLK add CA18 100pF cap. | EMI request |
| 13 | PVT | 33 | Audio pin4 add D7 | Realtek change note for bug |
| 14 | PVT | 28 | Add Q45 2N7002 | For Wimax LED no function, bug |
| 15 | PVT | 27 | change U42 to ST | cost down |
| 16 | PVT | 27 | Add Q64,Q37,R440 | cost down, enable bkl circuit |
| 17 | PVT | 26 | Add R322,R328 0 ohm | For "non-PnP device" bug |
| 18 | PVT | 22 | Add R474 34.8K ohm | N-vidia N11M-LP1 device ID |
| 19 | PVT | 19 | L7,L8,L17,L18 change to 0 ohm | for EDID can't detect sometime, cost down |
| 20 | PVT | 17 | R208 change to 1 ohm | CRT garbege in uma mode |
| 21 | PVT | 16 | R580 add 0 ohm | for bug, uma switch to dis will hang up |
| 22 | PVT | 15 | R175 2.2k to 4.7k ohm | common design update |
| 23 | PVT | 12 | Y1 14.318MHz change to 5032 size | common design |
| 24 | PVT | 09 | C75,C76,C92,C164 change to 333uF 6m ohm | cost down |
| 25 | PVT | X | Q4,QG1,Q32,Q33,Q73,Q74,Q75,Q97 change to AO3413 | cost down |
| 26 | PVT | 34 | Add R345 10Kohm | EC_TACH pull up |

| NO | DATE | PAGE | MODIFICATION LIST | PURPOSE |
|---|---|---|---|---|
| 1 | SVT | 39 | Add R568, Q40 | +0.75VS discharge |
| 2 | SVT | 39 | Add R673 10K | +1.5V EN pin pull down |
| 3 | SVT | 39 | Change U33 to Low Rds-on type | VRAM voltage drop |
| 4 | SVT | 37 | Add EMI common chock on USB p1,p0;L38,L39 | EMI |
| 5 | SVT | 34 | CLKRUN# pull down, R671 10K | common design |
| 6 | SVT | 34 | Reserve R685 for WLAN_LED by EC control | WLAN LED |
| 7 | SVT | 33 | ALC259 change to VB | Version change |
| 8 | SVT | 29 | del R654 leakage | leakage |
| 9 | SVT | 28 | WLAN LED control change to DTL AND gate | For some card design |
| 10 | SVT | 27 | Add U6,U17,U18,U19 for BKL and PWM control | signal select switch |
| 11 | SVT | 27 | Add R370 680ohm | support No color engine panel |
| 12 | SVT | 27 | Add D36 | LCEVDD discharge |
| 13 | SVT | 26 | Reserve CRT double pi filter | Vidio Filter |
| 14 | SVT | 25 | Add R670 2.2K | HDMI common design |
| 15 | SVT | 15,25 | Add R675,R674 100K | Hybrid mode disable PCH HDMI |
| 16 | SVT | 17 | C505,C492 change size 0603 | ME demend |
| 17 | SVT | 17 | C447 change to 1uF | common design |
| 18 | SVT | 13 | Add R677 | HDA SDIN1 |
| 19 | SVT | 8 | Change R268 to 47K | timing |
| 20 | SVT | 8 | Add R551 1K | PSI# pull down, strip pin |
| 21 | SVT | 5 | C338 change to 0.047uF | common design, S3 shutdown |
| 22 | SVT | 5 | R135 remove | warm boot issue |
| 23 | SVT | 12 | Add C365 | 10pF for RF |
| 24 | SVT | 14 | Add R413,C439 22ohm,10pF | For RF |

| | | | |
|---|---|---|---|
| Title | HW PIR | | |
| Size A3 | Document Number LA-5941P | | Rev 0.3 |
| Date: Thursday, April 08, 2010 | Sheet 50 of 50 | | |