MANAUS 10M

PreMP Build(A02)

2010.03.23

DATE	CHANGE NO.	REV
2010/03/16	2010-ECO-004887	A

	EE	DATE	POWER	DATE
DRAWER	Pei, Kobe	2010-03-16	Lo, Bin-Zhi	2010-03-16
DESIGN	Pei, Kobe	2010-03-16	Lo, Bin-Zhi	2010-03-16
CHECK	Pei, Kobe	2010-03-16	Lo, Bin-Zhi	2010-03-16
RESPONSIBLE	Chiou, Bryan	2010-03-16	Liang, Tommy	2010-03-16

SIZE = 3 VER : A02

FILE NAME : MAS10M-6050A2355301-MB-A02-26-20100322

P/N 6050A2355301

INVENTEC

TITLE *MAS10M*

SIZE	CODE	DOC. NUMBER	REV
A3	CS	*1310A23553-0-0*	*A02*

SHEET 1 OF 52

WWW.AliSaler.Com

TABLE OF CONTENTS

PAGE	PAGE	PAGE
1.COVER PAGE	31.ICH9-1	
2.INDEX	32.ICH9-2	
3.BLOCK DIAGRAM	33.ICH9-3	
4.POWER SEQUENCE BLOCK	34.ICH9-4	
5-12.SYSTEM POWER	35.ICH9-5	
13.CLOCK GENERATOR	36.SATA HDD CONN	
14.PENRYN-1	37.ODD CONN	
15.PENRYN-2	38.USB CONN	
16.PENRYN-3	39.Camera	
17.PENRYN-4	40.KBC	
18.FAN & THERMAL CONTROLLER	41.K/B & TP/B CONN	
19.CANTIGA-1	42.Audio Codec	
20.CANTIGA-2	43.Audio AMP/MIC/Speaker	
21.CANTIGA-3	44.LAN CONTROLLER	
22.CANTIGA-4	45.RJ45 & TRANSFORMER	
23.CANTIGA-5	46.USB Card Reader	
24.CANTIGA-6	47.WLAN /Debug	
25.CANTIGA-7	48.LED(M/B) & HOTKEY/B CONN	
26.DDR3 DIMM0	49.HALL SENSOR	
27.DDR3 DIMM1	50.Screw	
28.DDR DAMPING	51.EMI	
29.CRT CONN	52. power board	
30.LCM CONN		

INVENTEC			
TITLE MAS10M			
SIZE A3	CODE CS	DOC. NUMBER 1310A23553-0-0	REV A02
CHANGE by KOBE	23-Mar-2010	SHEET 2 OF 52	

WWW.AliSaler.Com

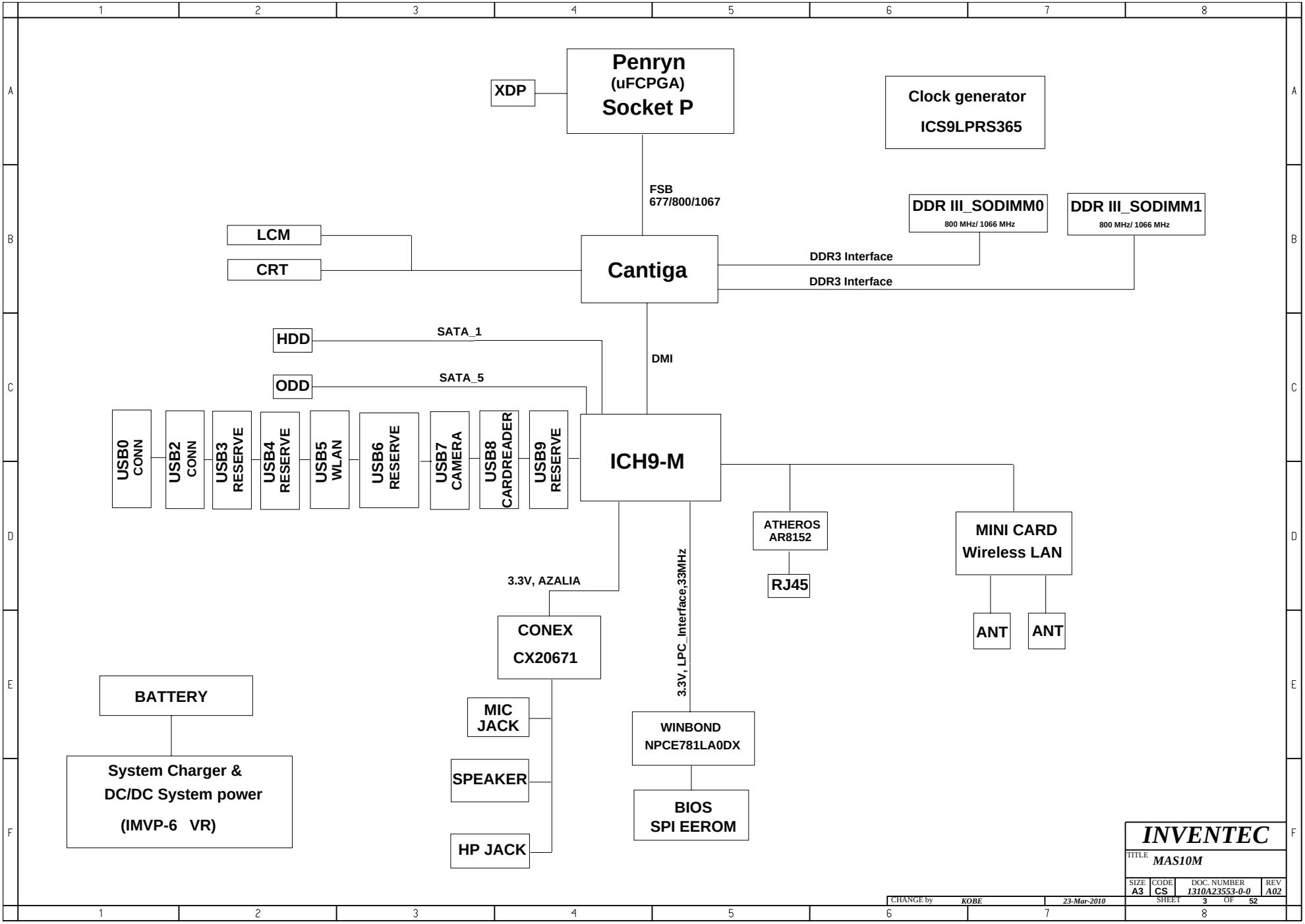

WWW.AliSaler.Com

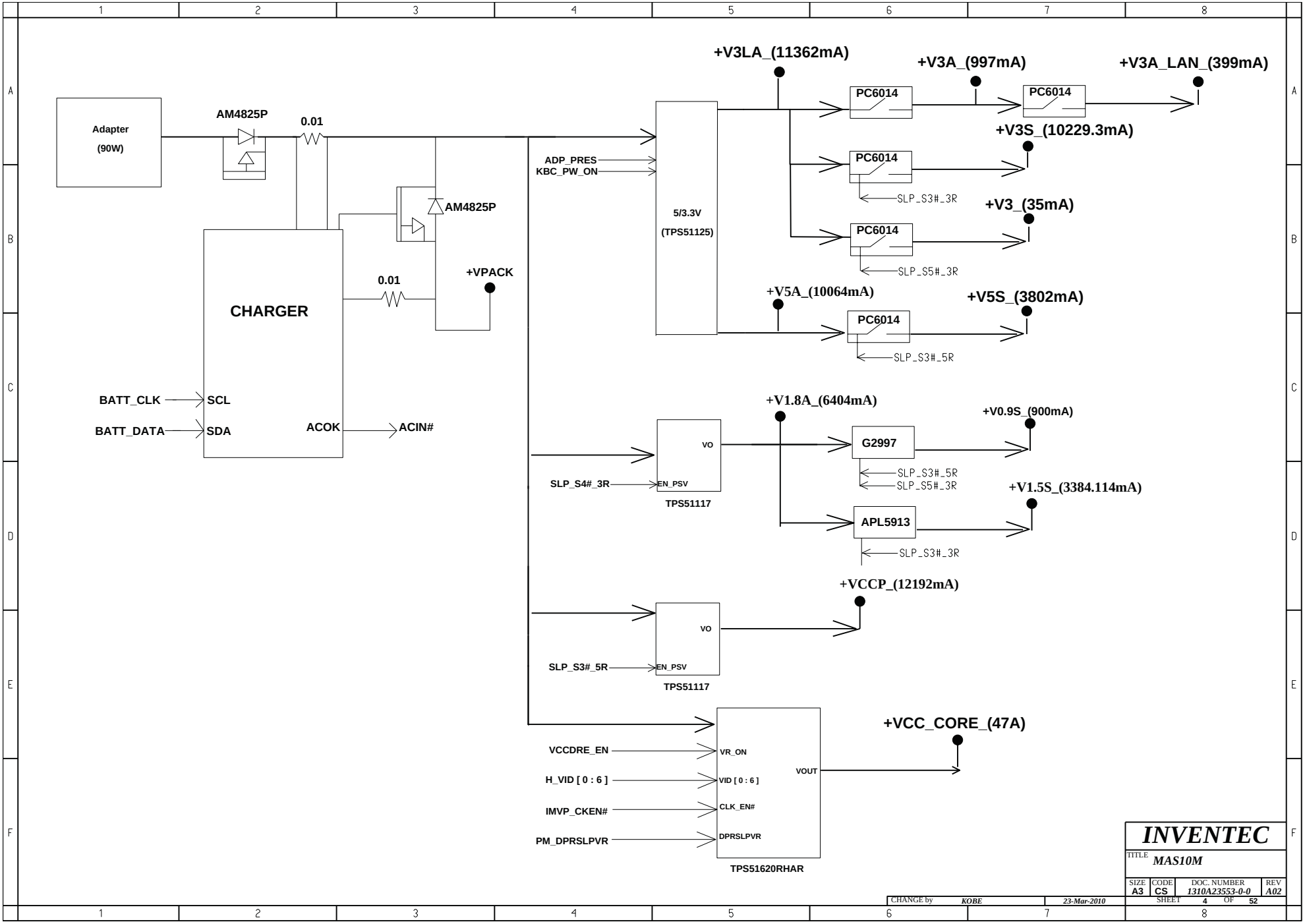

WWW.AliSaler.Com

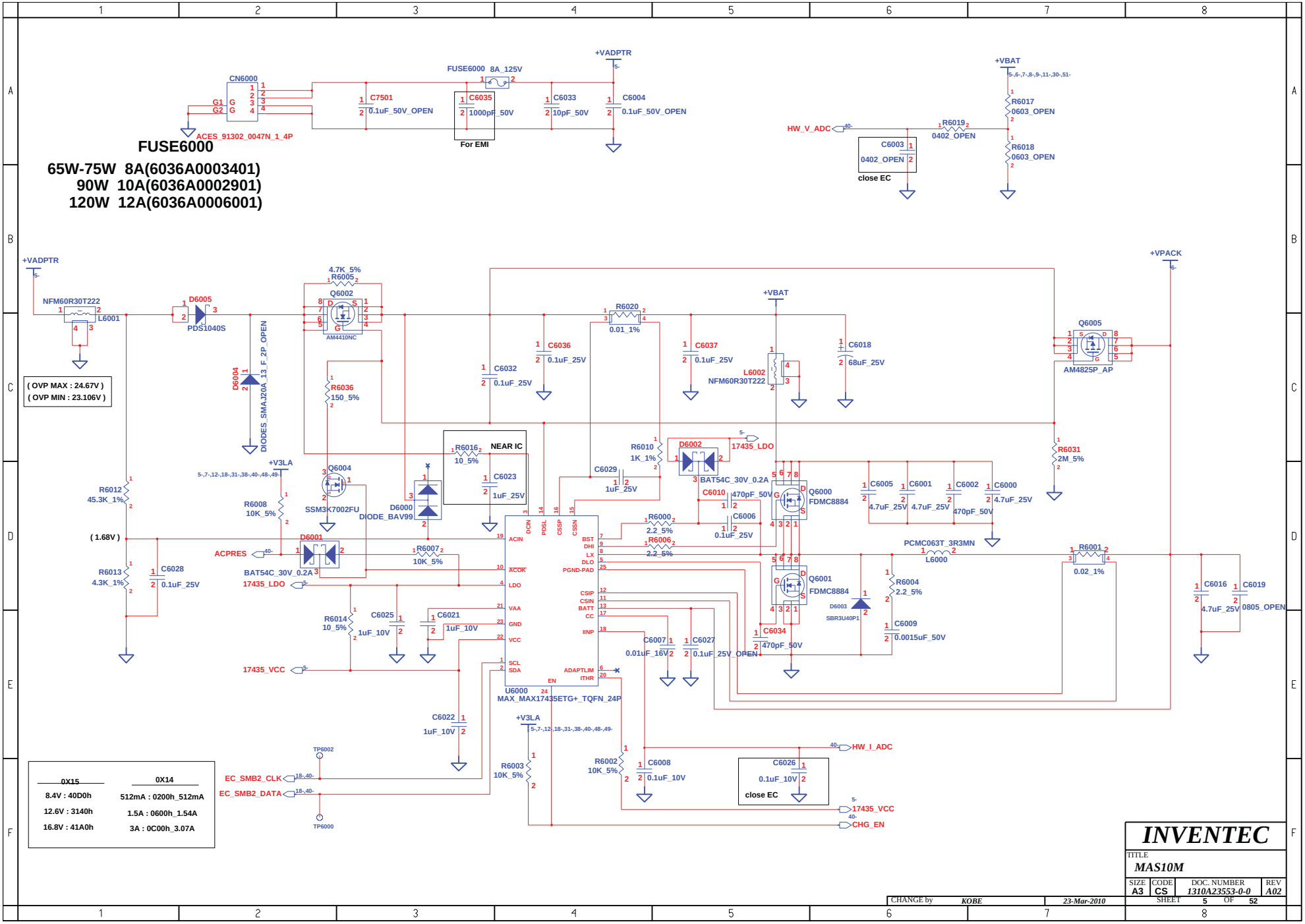

WWW.AliSaler.Com

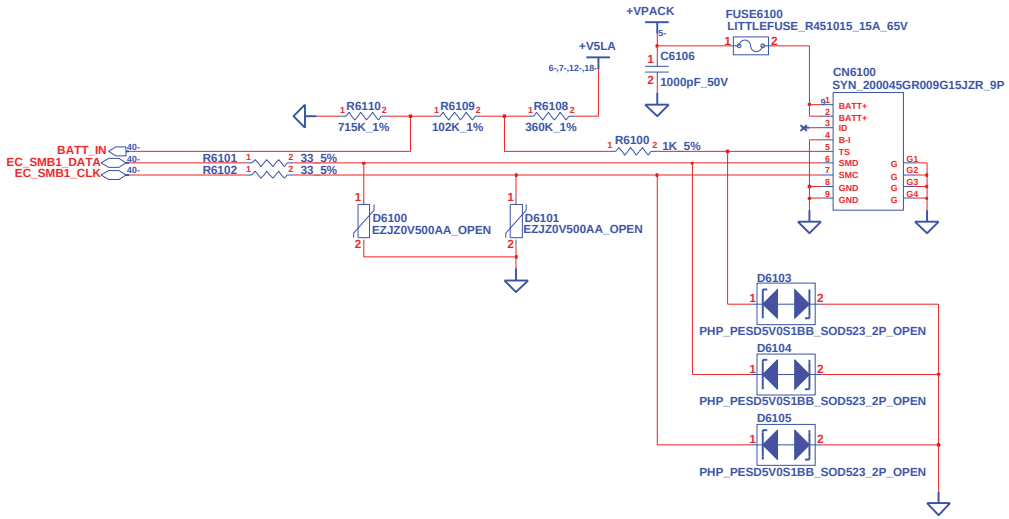

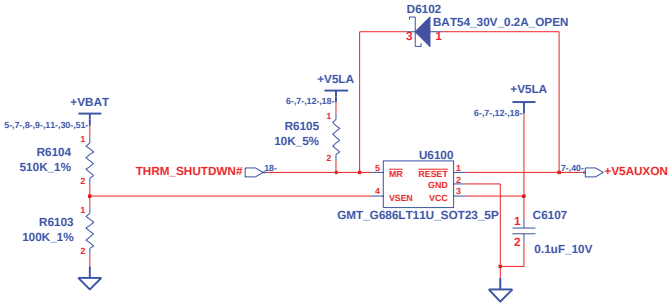

INVENTEC			
TITLE: SELECT & BATTERY CONN			
SIZE A3	CODE CS	DOC. NUMBER 1310A23553-0-0	REV A02
CHANGE by KOBE	23-Mar-2010	SHEET 6 OF 52	

WWW.AliSaler.Com

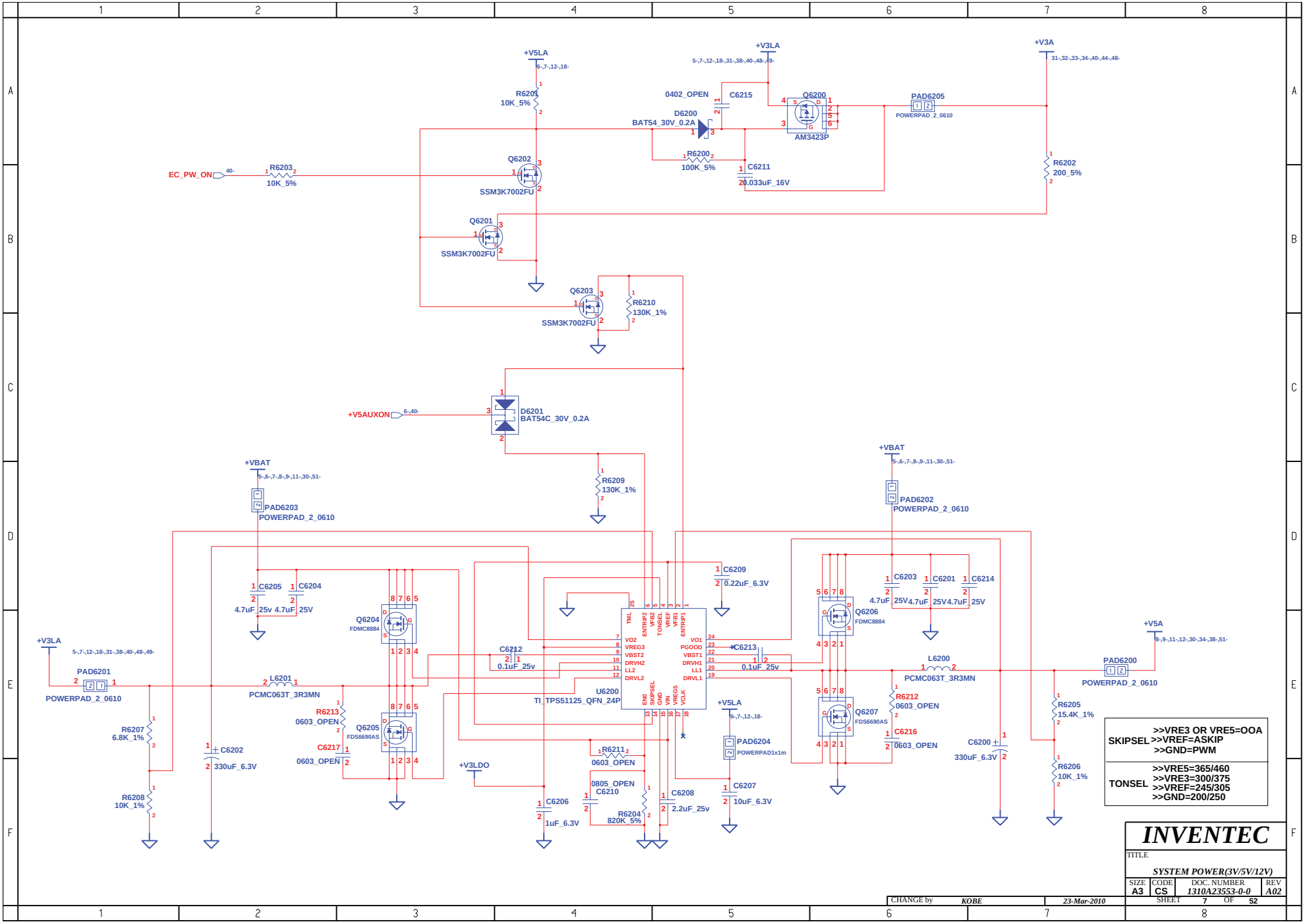

WWW.AliSaler.Com

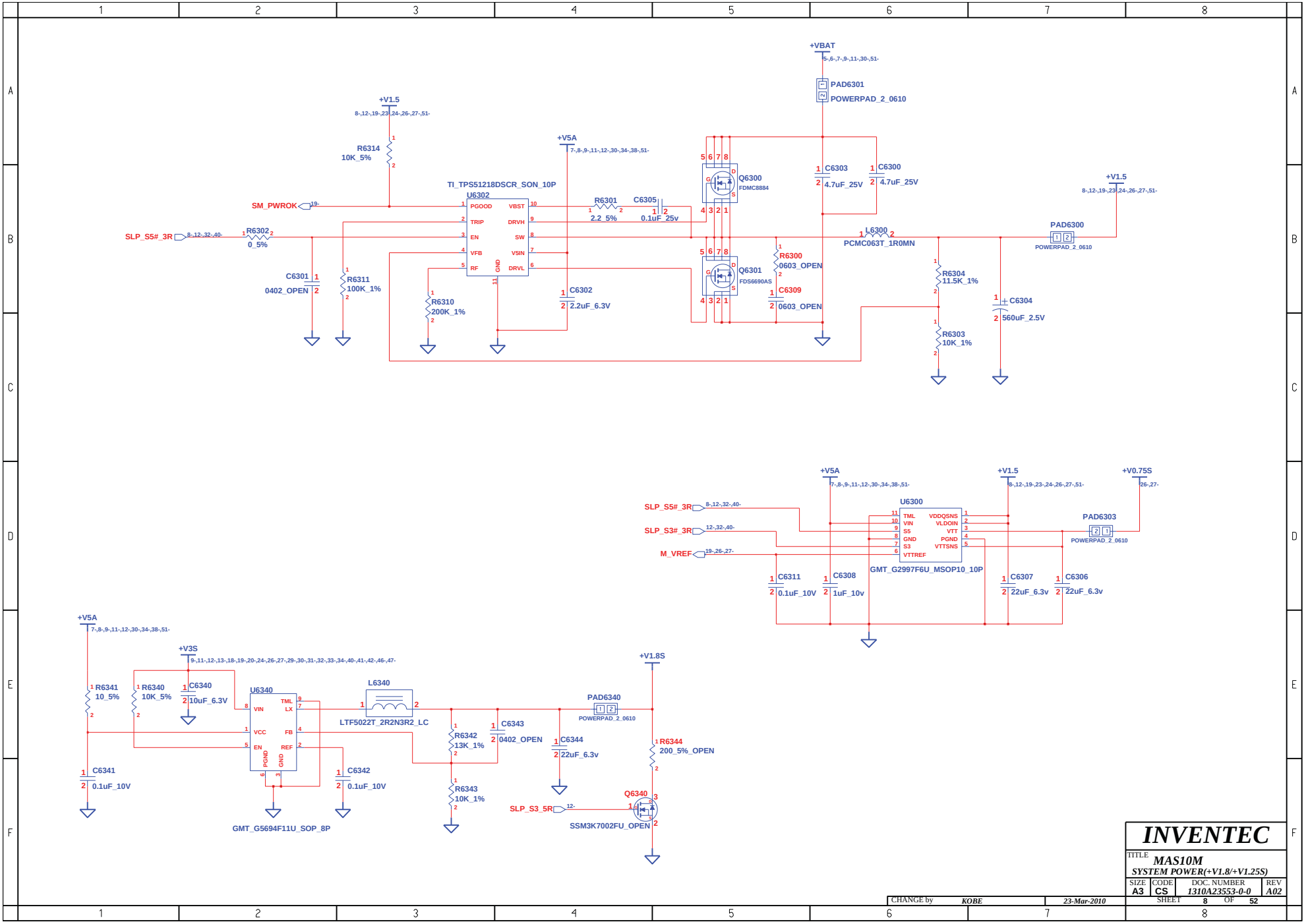

INVENTEC			
TITLE MAS10M SYSTEM POWER(+V1.8/+V1.25S)			
SIZE A3	CODE CS	DOC. NUMBER 1310A23553-0-0	REV A02
CHANGE by KOBE	23-Mar-2010	SHEET 8 OF 52	

WWW.AliSaler.Com

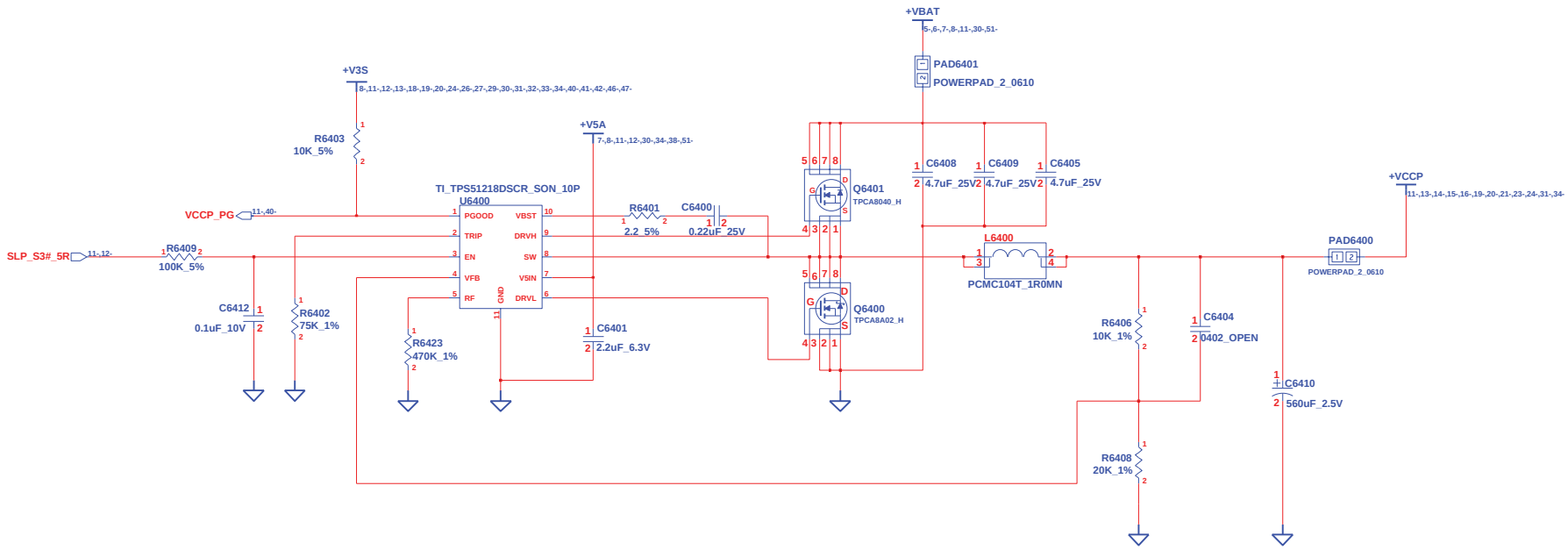

INVENTEC

TITLE **MAS10M**
GRAPHIC POWER (+VGFX_CORE)

SIZE	CODE	DOC. NUMBER	REV
A3	CS	1310A23553-0-0	A02

CHANGE by KOBE 23-Mar-2010

SHEET 9 OF 52

WWW.AliSaler.Com

BLANK

INVENTEC			
TITLE MAS10M SYSTEM POWER(+VCCP/+V1.5S)			
SIZE A3	CODE CS	DOC. NUMBER 1310A23553-0-0	REV A02
CHANGE by KOBE	23-Mar-2010	SHEET 10 OF 52	

WWW.AliSaler.Com

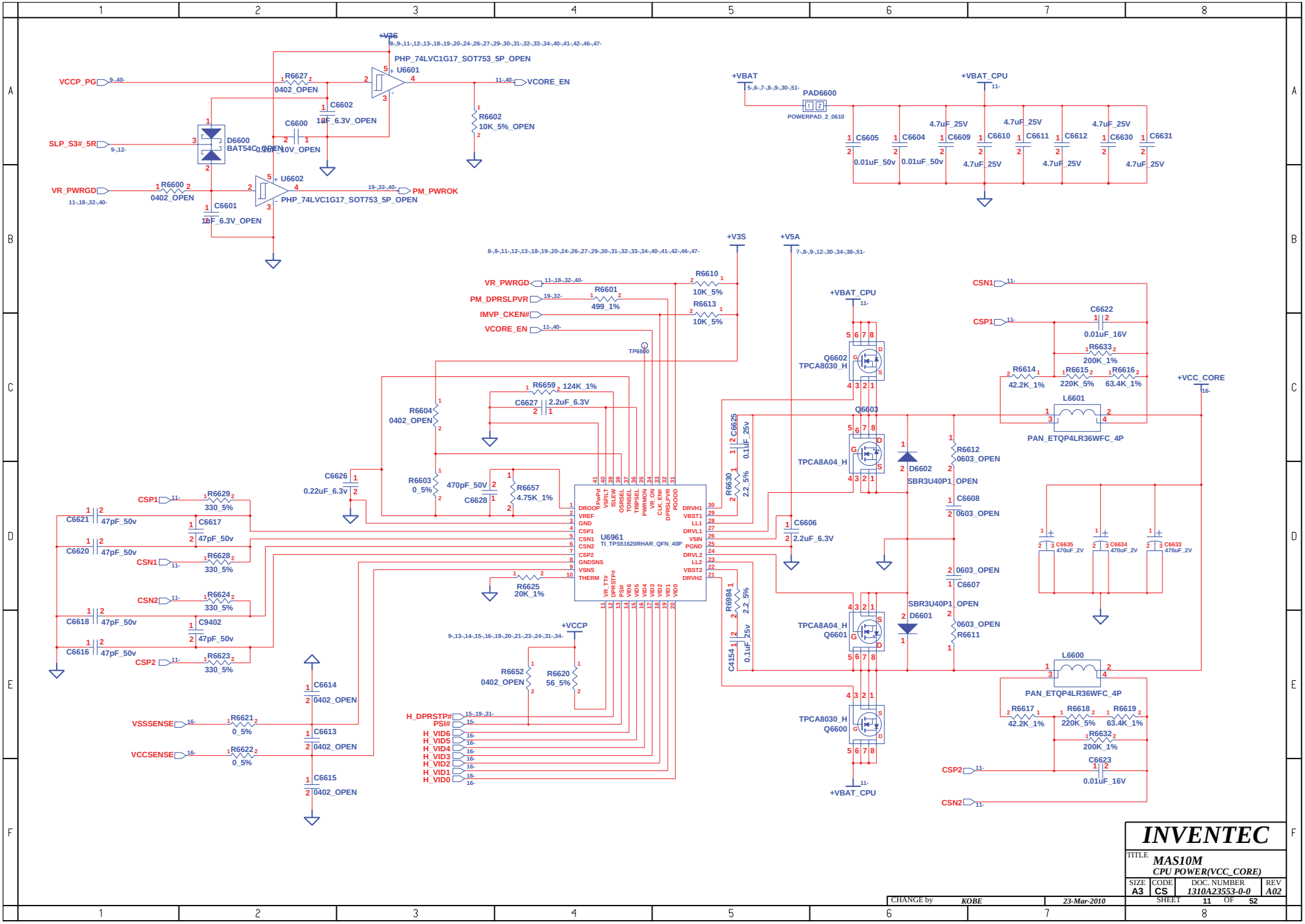

WWW.AliSaler.Com

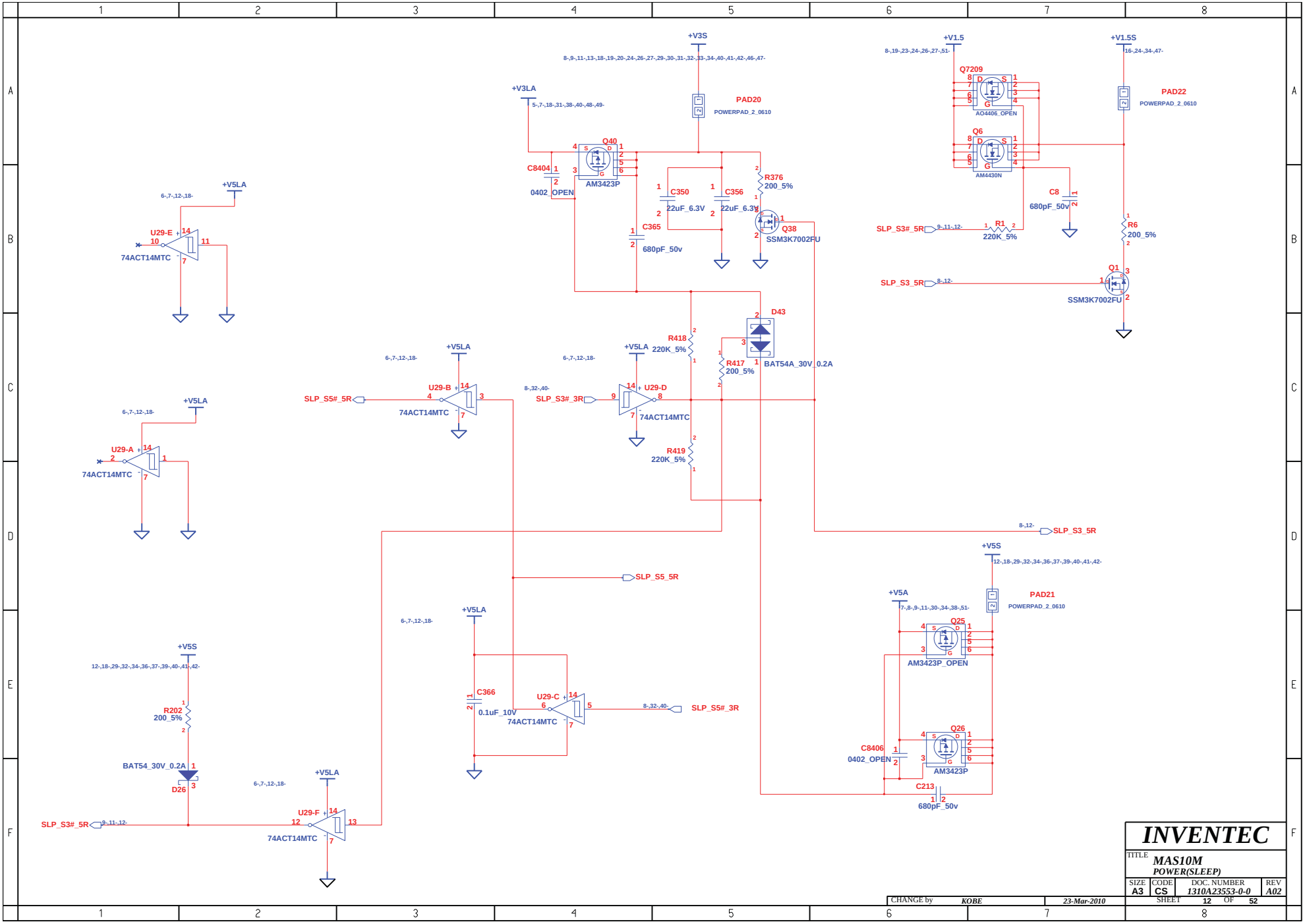

INVENTEC			
TITLE MAS10M POWER(SLEEP)			
SIZE A3	CODE CS	DOC. NUMBER 1310A23553-0-0	REV A02
CHANGE by KOBE	23-Mar-2010	SHEET 12 OF 52	

WWW.AliSaler.Com

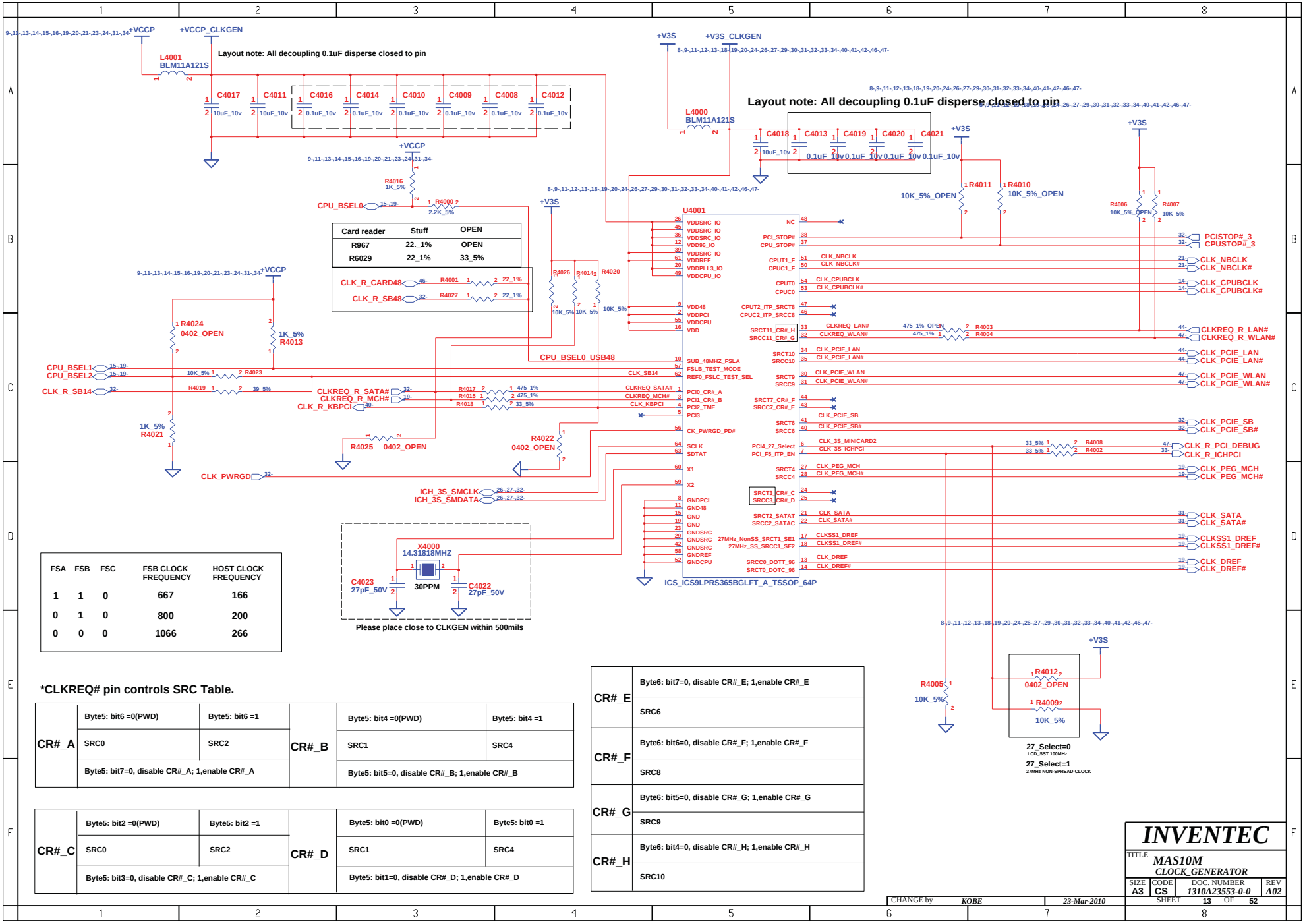

Card reader	Stuff	OPEN
R967	22._1%	OPEN
R6029	22_1%	33_5%

FSA	FSB	FSC	FSB CLOCK FREQUENCY	HOST CLOCK FREQUENCY
1	1	0	667	166
0	1	0	800	200
0	0	0	1066	266

***CLKREQ# pin controls SRC Table.**

CR#_A	Byte5: bit6 =0(PWD)	Byte5: bit6 =1	CR#_B	Byte5: bit4 =0(PWD)	Byte5: bit4 =1
	SRC0	SRC2		SRC1	SRC4
	Byte5: bit7=0, disable CR#_A; 1,enable CR#_A			Byte5: bit5=0, disable CR#_B; 1,enable CR#_B	

CR#_C	Byte5: bit2 =0(PWD)	Byte5: bit2 =1	CR#_D	Byte5: bit0 =0(PWD)	Byte5: bit0 =1
	SRC0	SRC2		SRC1	SRC4
	Byte5: bit3=0, disable CR#_C; 1,enable CR#_C			Byte5: bit1=0, disable CR#_D; 1,enable CR#_D	

CR#_E	Byte6: bit7=0, disable CR#_E; 1,enable CR#_E
	SRC6
CR#_F	Byte6: bit6=0, disable CR#_F; 1,enable CR#_F
	SRC8
CR#_G	Byte6: bit5=0, disable CR#_G; 1,enable CR#_G
	SRC9
CR#_H	Byte6: bit4=0, disable CR#_H; 1,enable CR#_H
	SRC10

INVENTEC

TITLE MAS10M CLOCK_GENERATOR

SIZE	CODE	DOC. NUMBER	REV
A3	CS	1310A23553-0-0	A02

CHANGE by KOBE 23-Mar-2010 SHEET 13 OF 52

WWW.AliSaler.Com

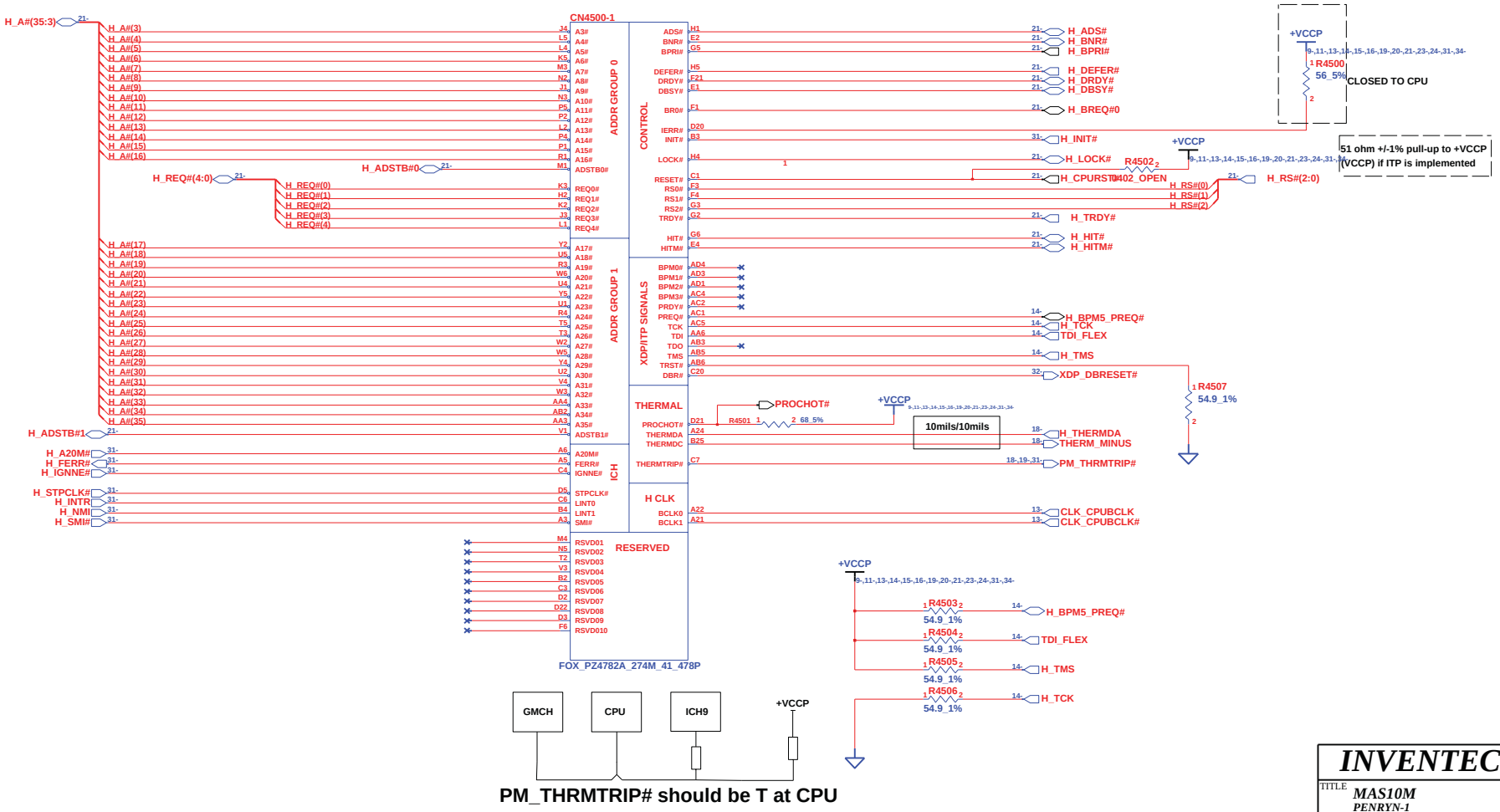

INVENTEC			
TITLE MAS10M PENRYN-1			
SIZE A3	CODE CS	DOC. NUMBER 1310A23553-0-0	REV A02
CHANGE by KOBE	23-Mar-2010	SHEET 14 OF 52	

WWW.AliSaler.Com

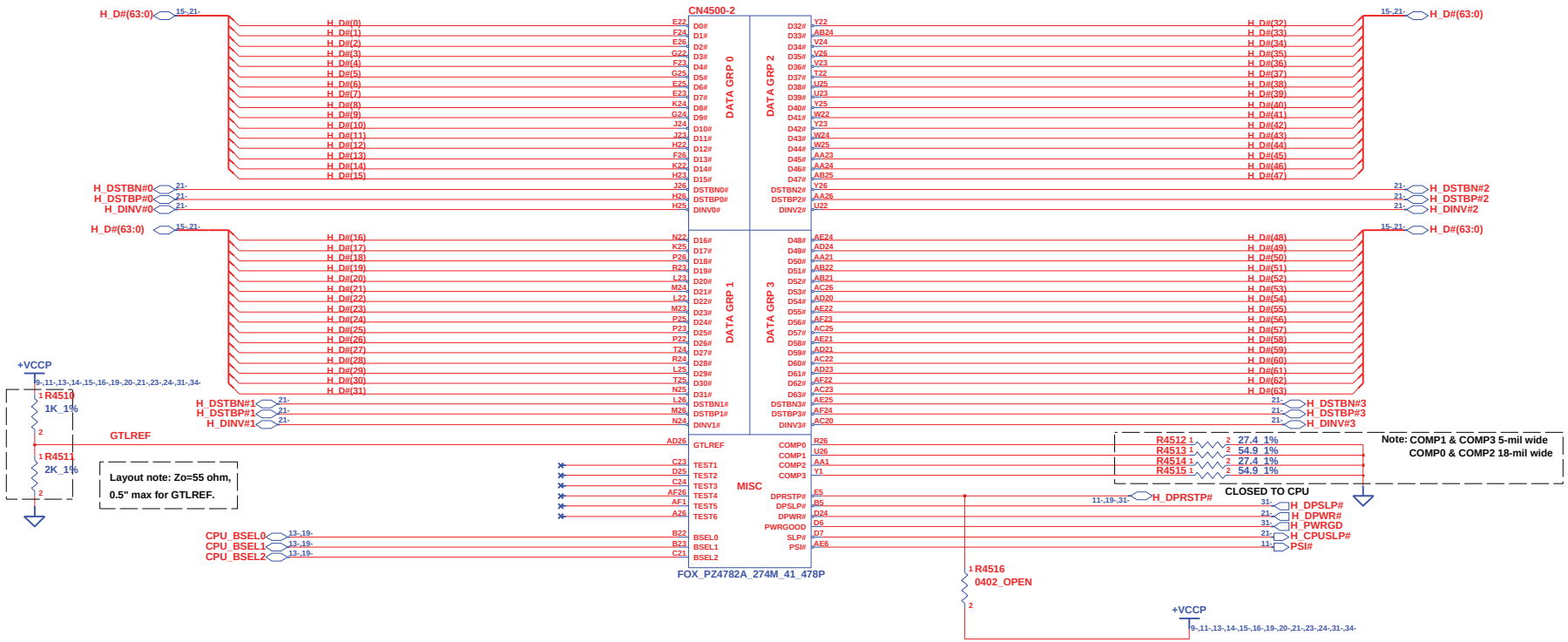

INVENTEC

TITLE **MAS10M**
PENRYN-2

SIZE	CODE	DOC. NUMBER	REV
A3	CS	1310A23553-0-0	A02

CHANGE by KOBE 23-Mar-2010

SHEET 15 OF 52

WWW.AliSaler.Com

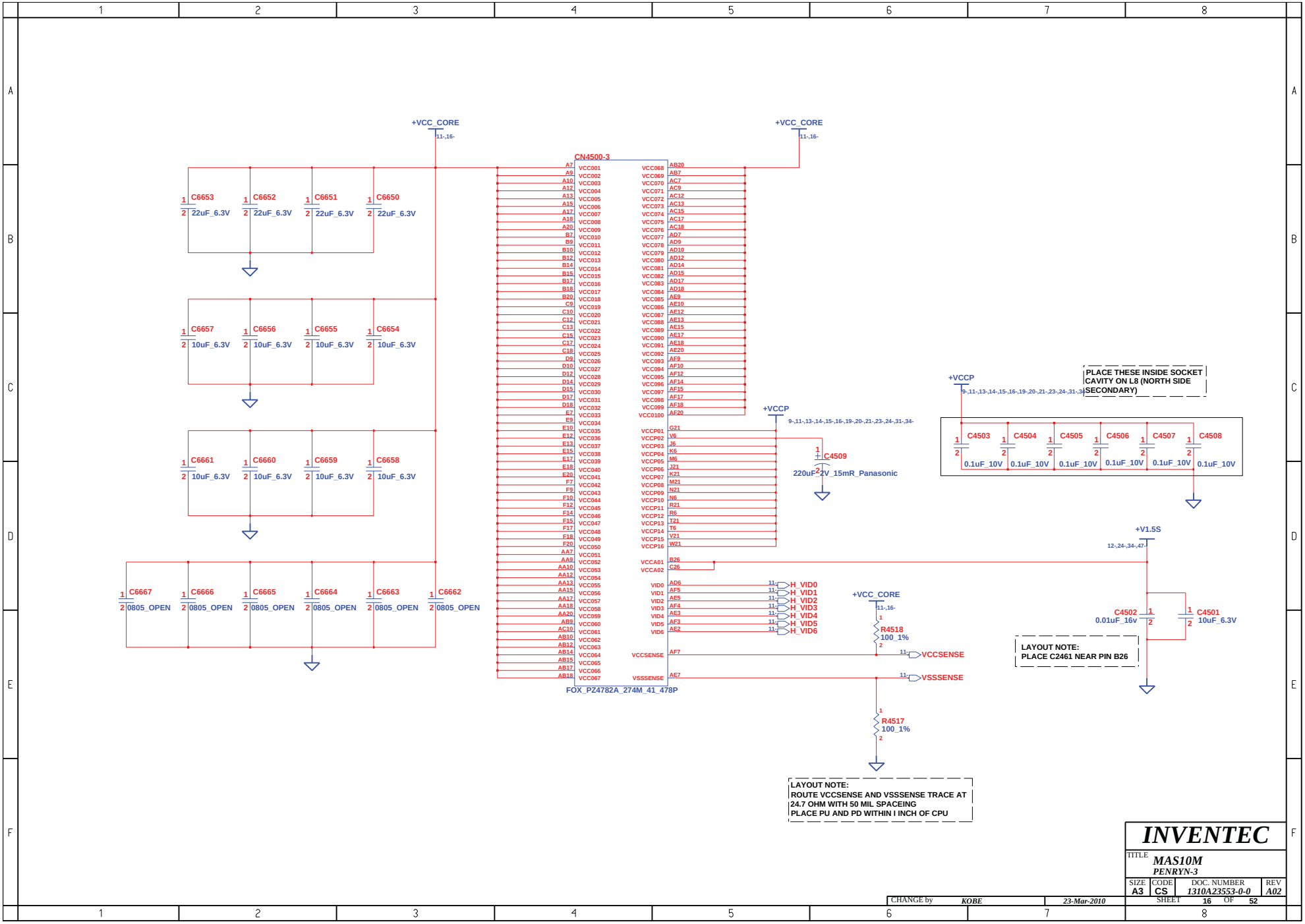

WWW.AliSaler.Com

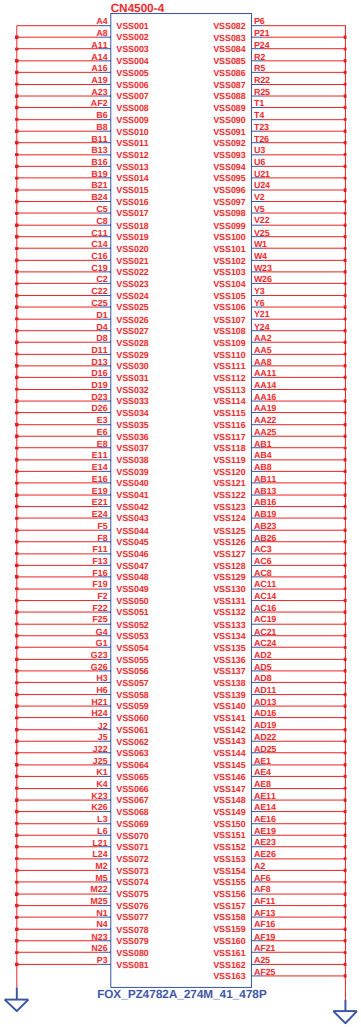

CHANGE by	KOBE	23-Mar-2010	

INVENTEC

TITLE **MAS10M**
PENRYN-4

SIZE	CODE	DOC. NUMBER	REV
A3	CS	1310A23553-0-0	A02

SHEET 17 OF 52

WWW.AliSaler.Com

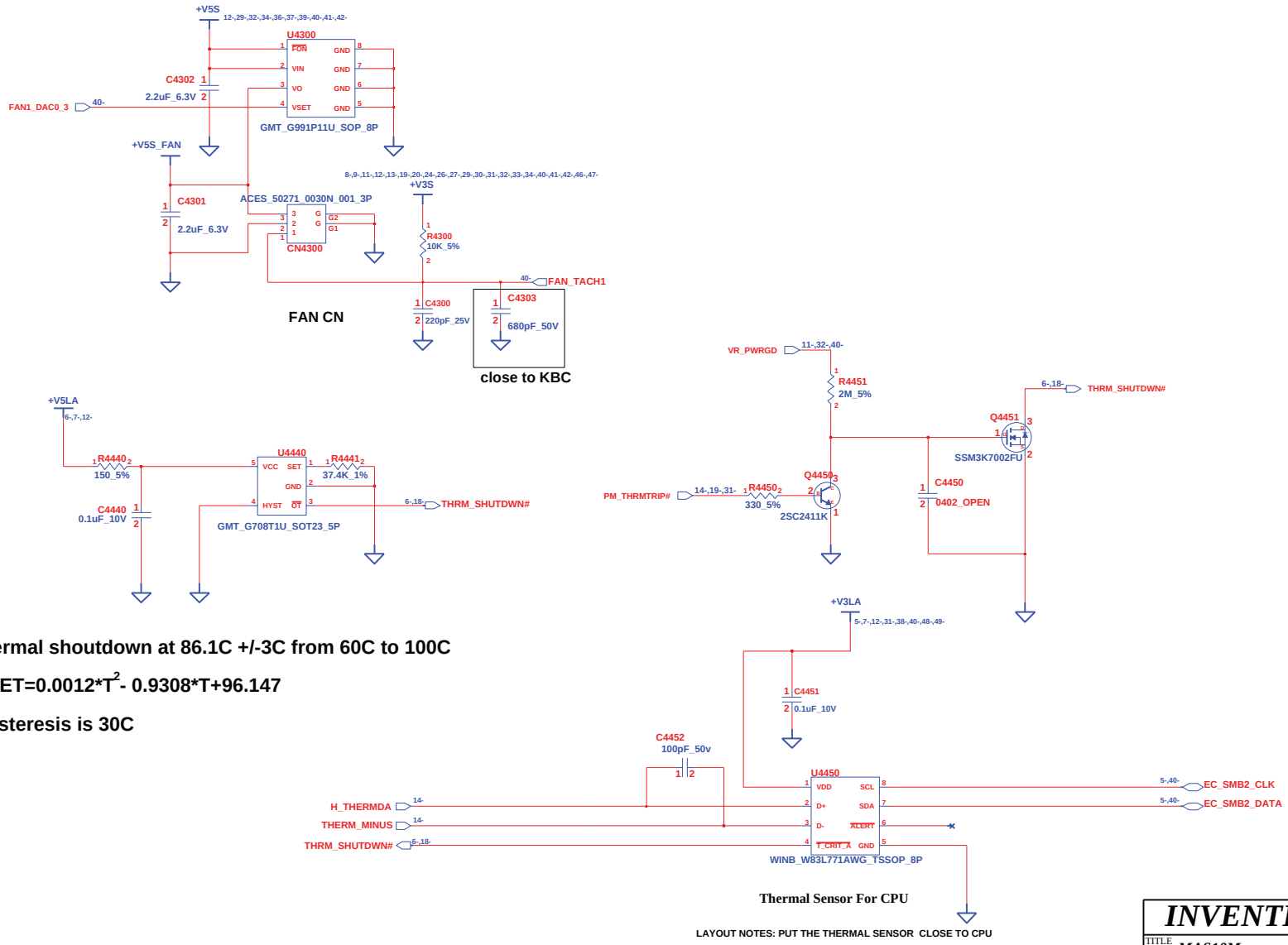

Thermal shoutdown at 86.1C +/-3C from 60C to 100C

RSET=0.0012*T^2- 0.9308*T+96.147

Hysteresis is 30C

INVENTEC			
TITLE MAS10M THERMAL&FAN CONTROLLER			
SIZE A3	CODE CS	DOC. NUMBER 1310A23553-0-0	REV A02
CHANGE by KOBE	23-Mar-2010	SHEET 18 OF 52	

WWW.AliSaler.Com

MCH_CFG(5)	LOW=DMIx2 HIGH=DMIx4

MCH_CFG(7) (CPU Strap)	LOW=RSVD HIGH=Mobile CPU

MCH_CFG(9) PCIE Graphics Lane	LOW=Reverse Lane HIGH=Normal operation

NOTE : USE 4K-OHM RESISTOR WHEN INSTALLING PULL-UP/PULL-DOWN RESISTOR ON ANY MCH-CFG CONNECTION/PINS.

MCH_CFG(13:12) XOR/ALLZ	00=PARTIAL CLOCK GATING DISABLE 01=XOR MODE ENABLE 10=ALL-Z MODE ENABLE 11=NORMAL OPERATION

MCH_CFG(16) (FSB Dynamic ODT)	LOW=Dynamic ODT Disable HIGH=Dynamic ODT Enable

MCH_CFG(6)	LOW=TPM Enable HIGH=TPM Disable

NOTE: CFG[2:0] STRP : 010b : 800 MT/S
011b : 667 MT/S

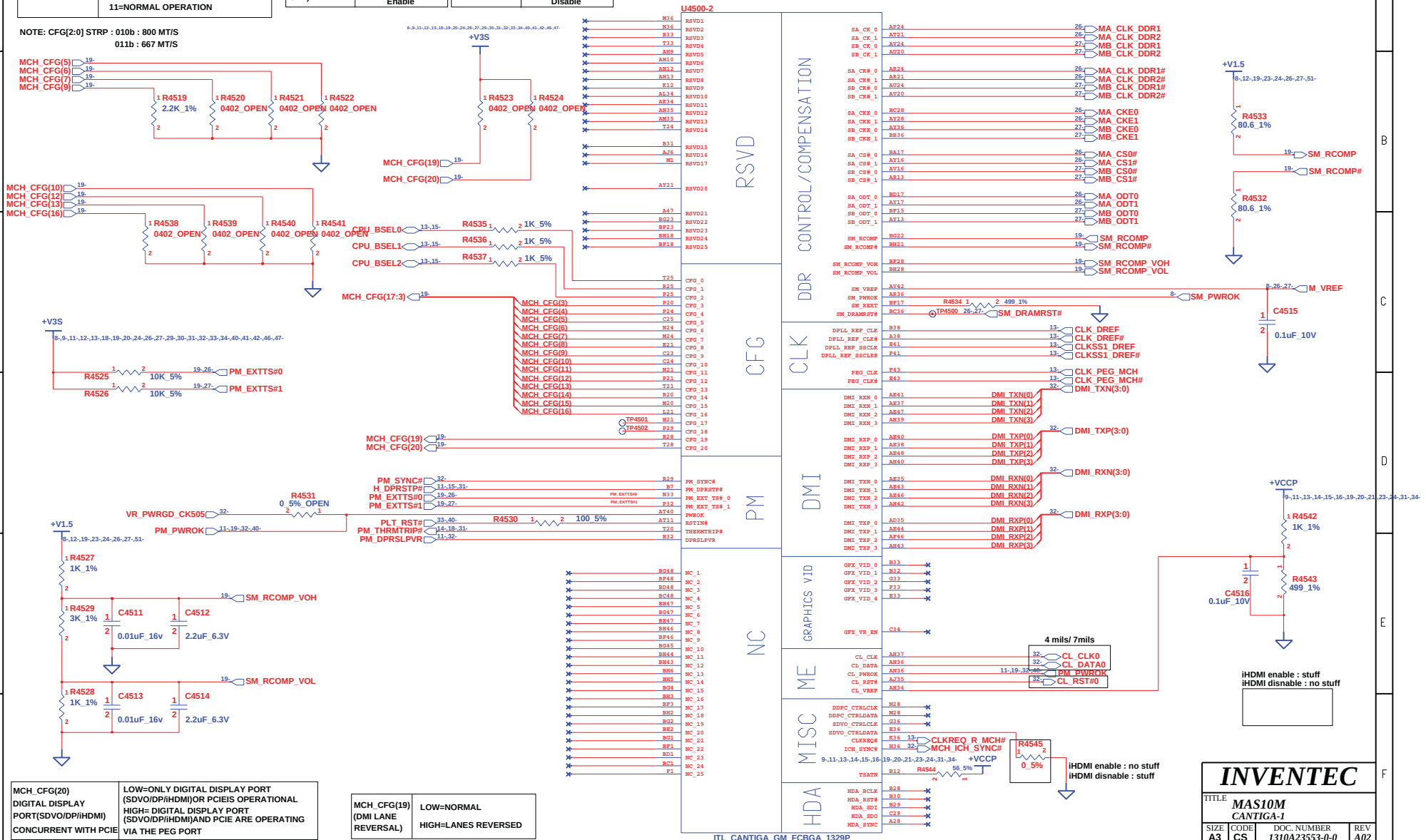

MCH_CFG(20) DIGITAL DISPLAY PORT(SDVO/DP/iHDMI) CONCURRENT WITH PCIE	LOW=ONLY DIGITAL DISPLAY PORT (SDVO/DP/iHDMI)OR PCIEIS OPERATIONAL HIGH= DIGITAL DISPLAY PORT (SDVO/DP/iHDMI)AND PCIE ARE OPERATING VIA THE PEG PORT

MCH_CFG(19) (DMI LANE REVERSAL)	LOW=NORMAL HIGH=LANES REVERSED

INVENTEC

TITLE **MAS10M**
CANTIGA-1

SIZE	CODE	DOC. NUMBER	REV
A3	CS	1310A23553-0-0	A02

SHEET 19 OF 52

CHANGE by KOBE 23-Mar-2010

WWW.AliSaler.Com

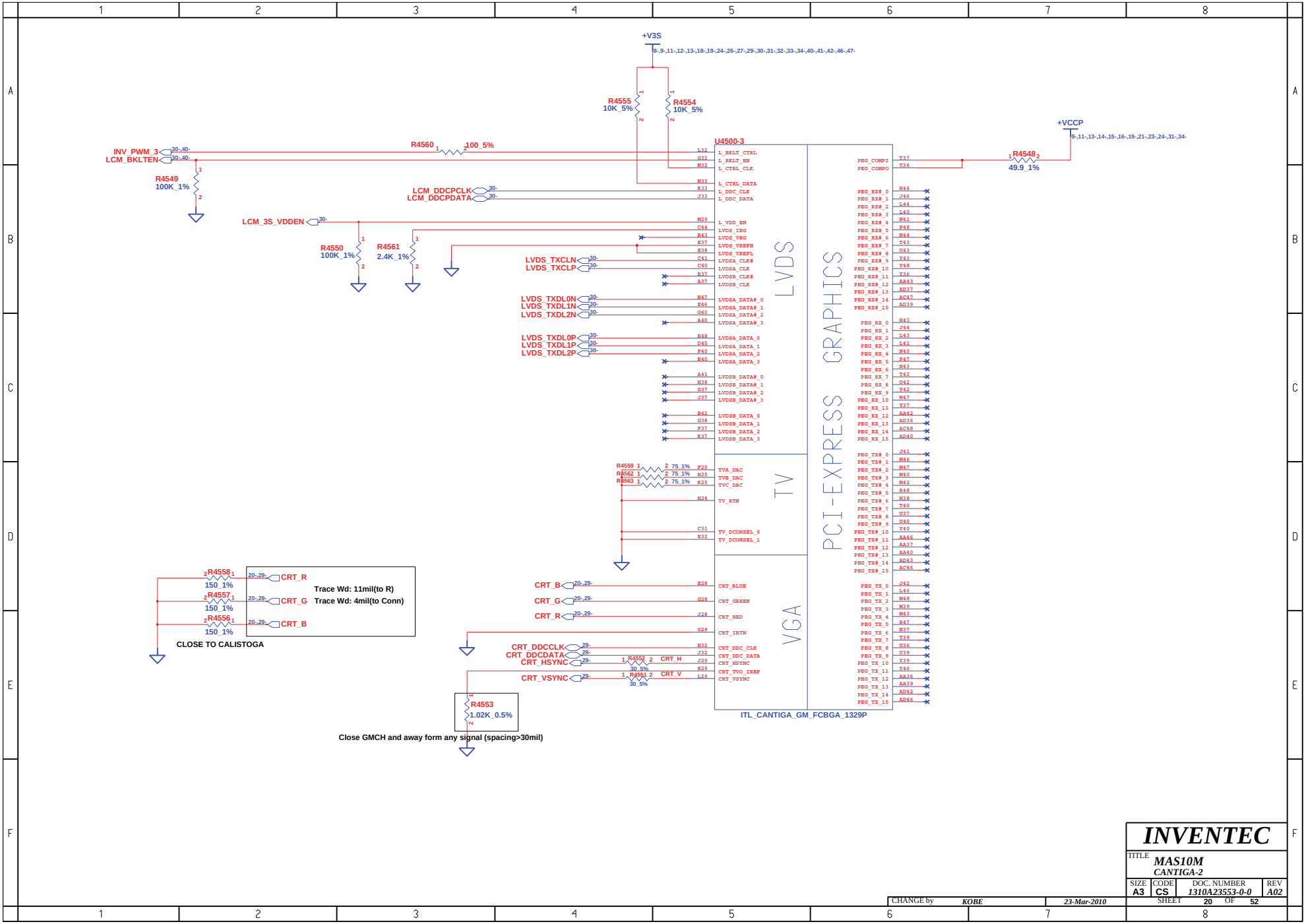

INVENTEC			
TITLE	MAS10M CANTIGA-2		
SIZE A3	CODE CS	DOC. NUMBER 1310A23553-0-0	REV A02
CHANGE by KOBE	23-Mar-2010	SHEET 20 OF 52	

WWW.AliSaler.Com

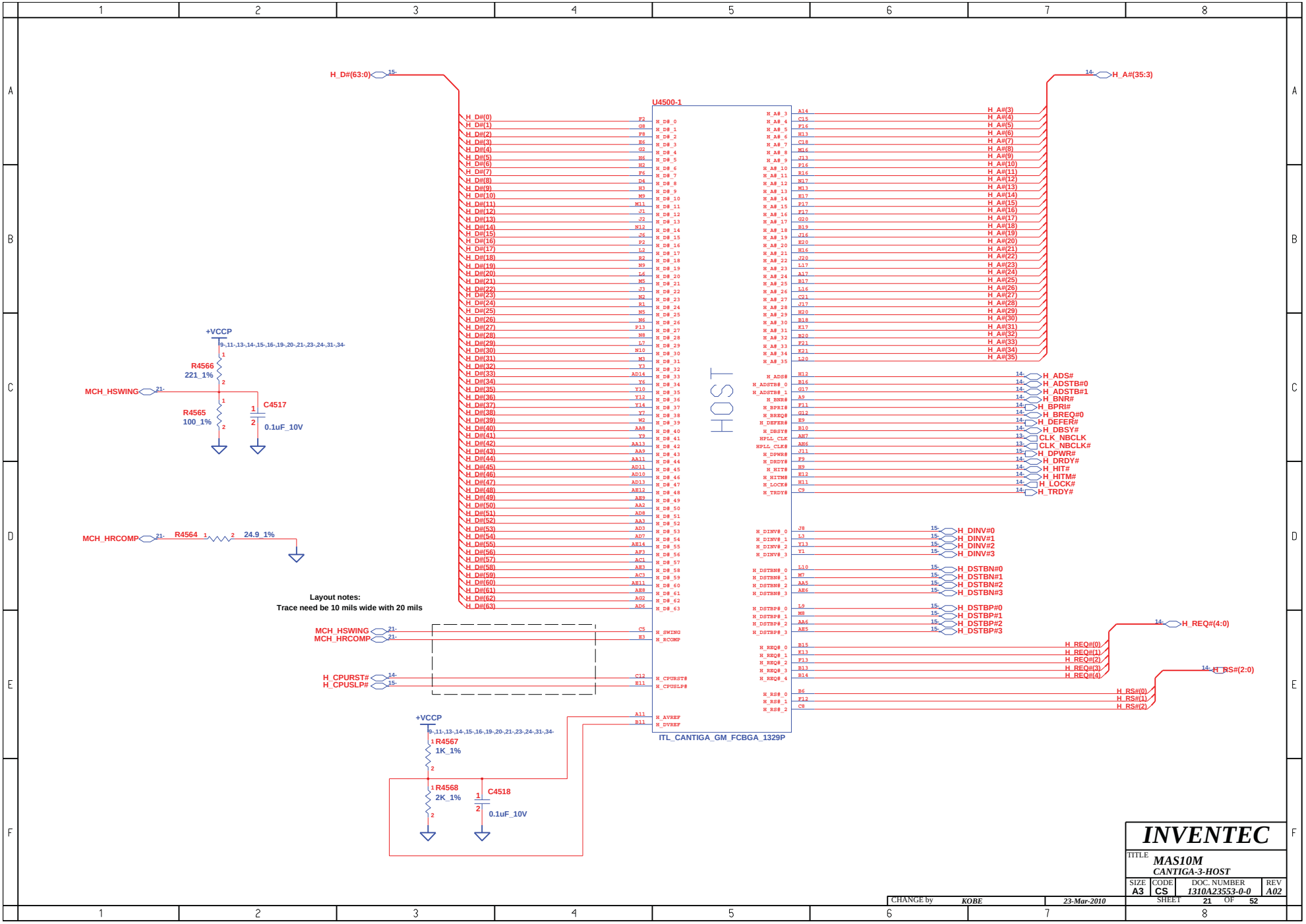

WWW.AliSaler.Com

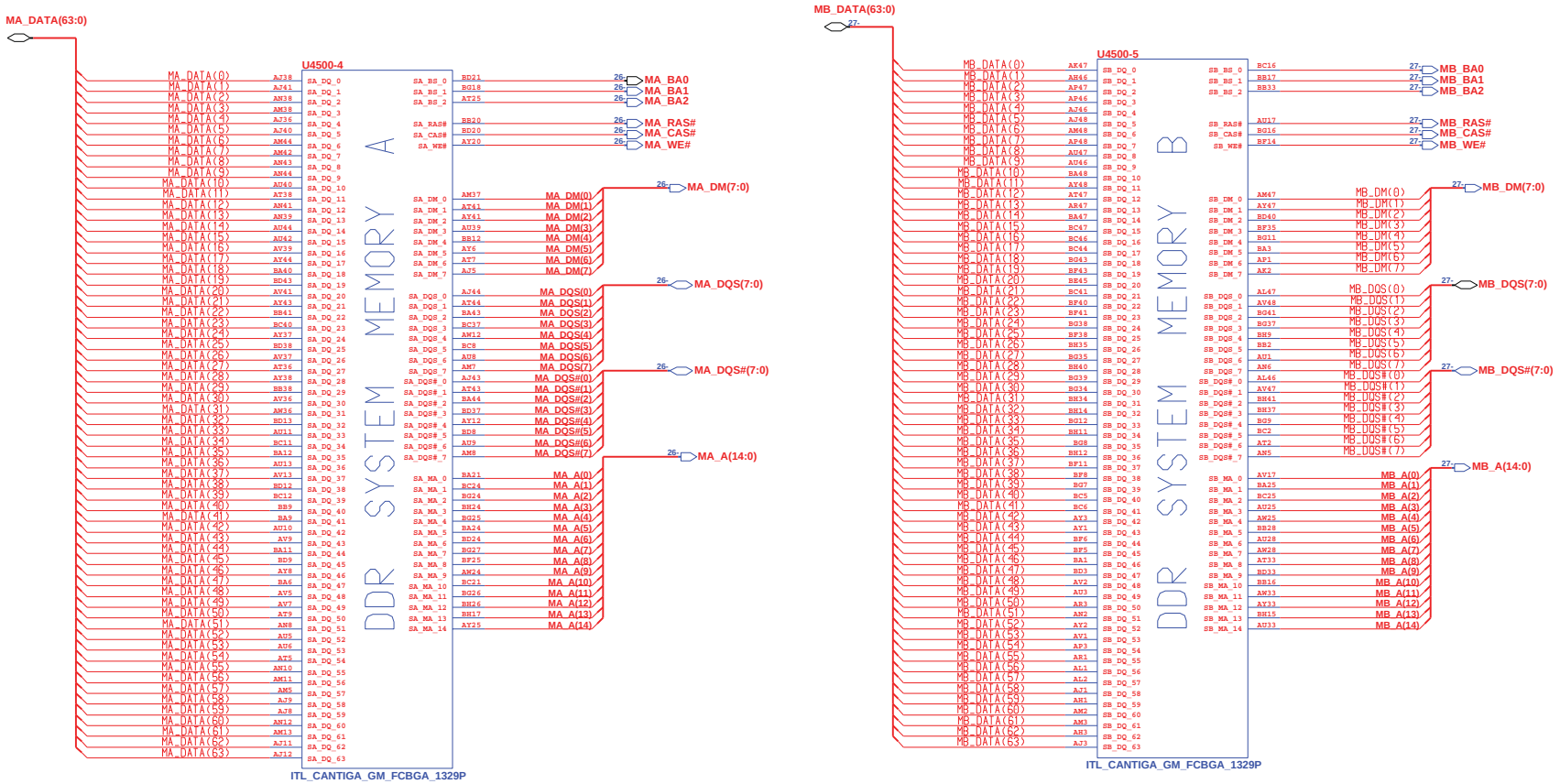

CHANGE by	KOBE	23-Mar-2010	

INVENTEC

TITLE *MAS10M*
CANTIGA-4-DDR2

SIZE	CODE	DOC. NUMBER	REV
A3	CS	1310A23553-0-0	A02

SHEET 22 OF 52

WWW.AliSaler.Com

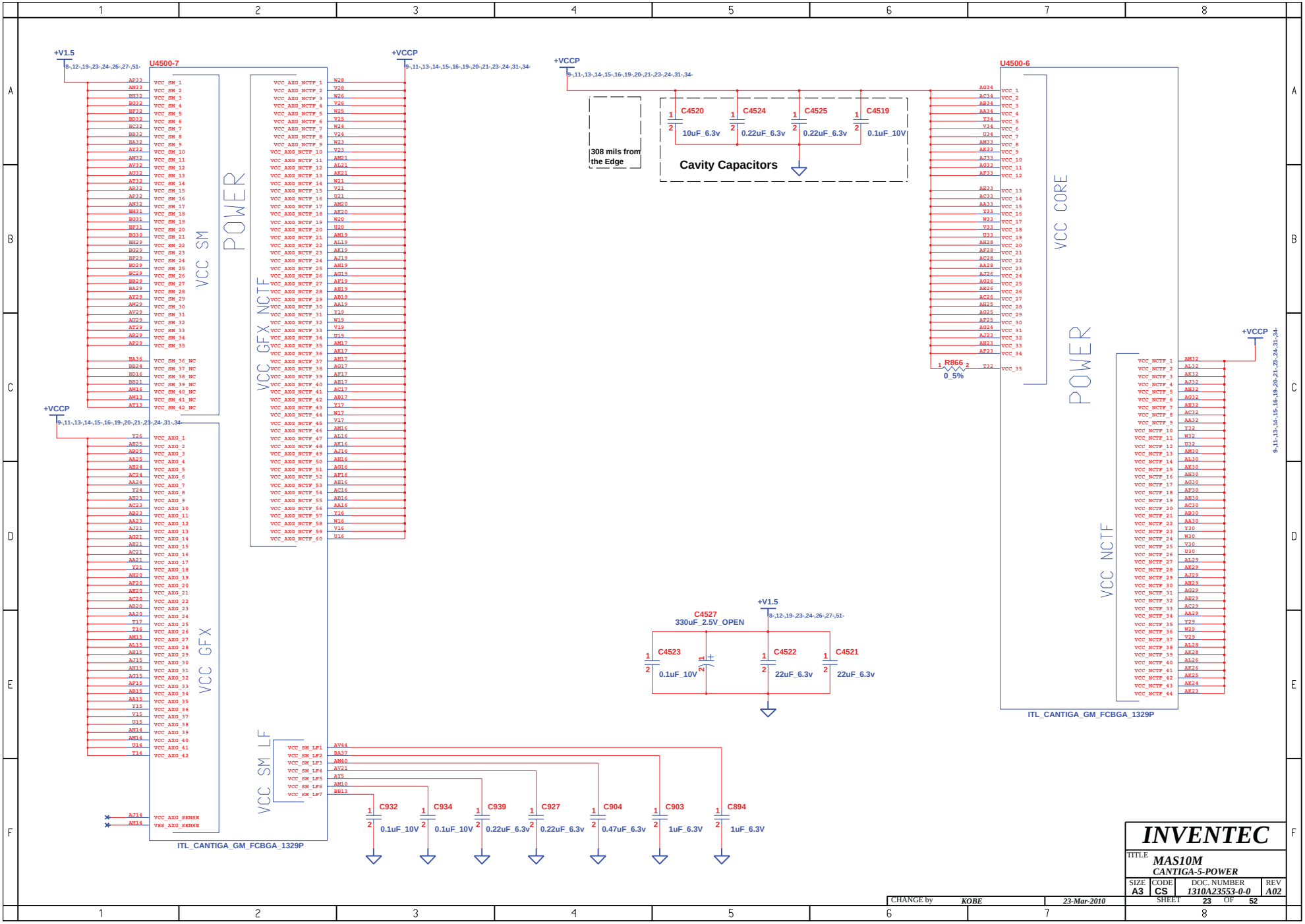

WWW.AliSaler.Com

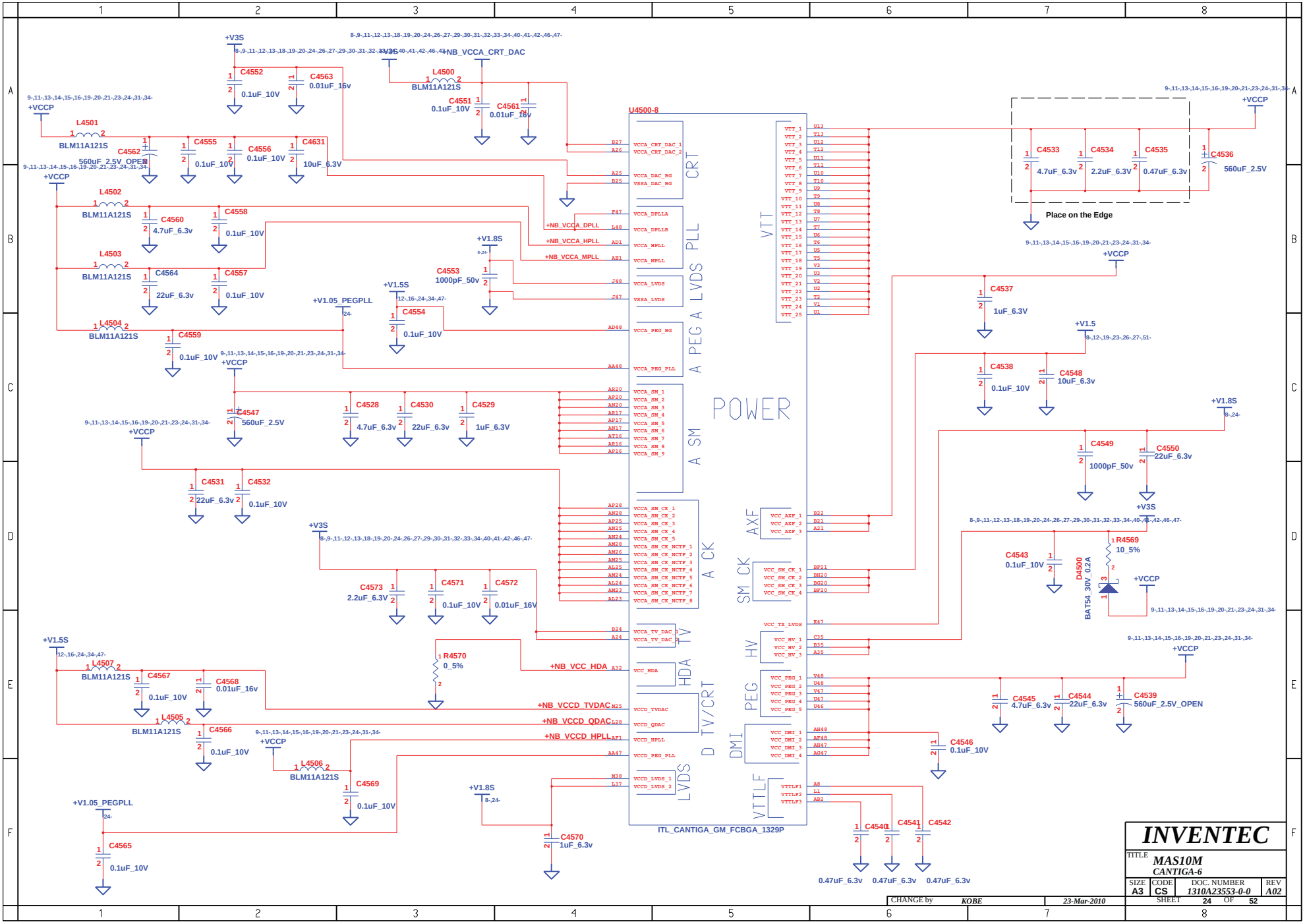

WWW.AliSaler.Com

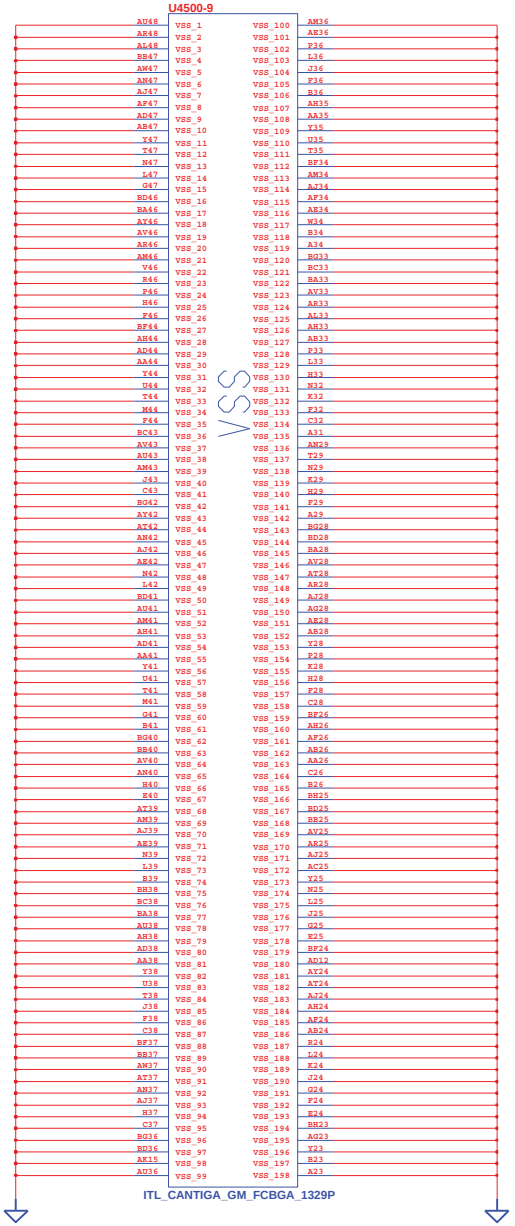

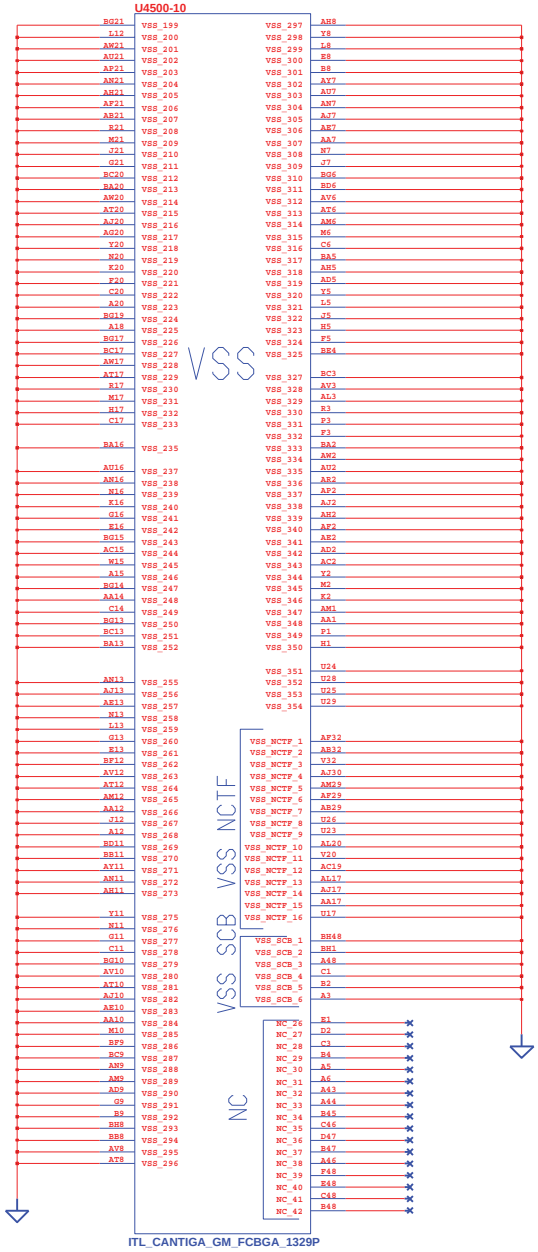

INVENTEC			
TITLE MAS10M CANTIGA-7			
SIZE A3	CODE CS	DOC. NUMBER 1310A23553-0-0	REV A02
CHANGE by KOBE	23-Mar-2010	SHEET 25 OF 52	

WWW.AliSaler.Com

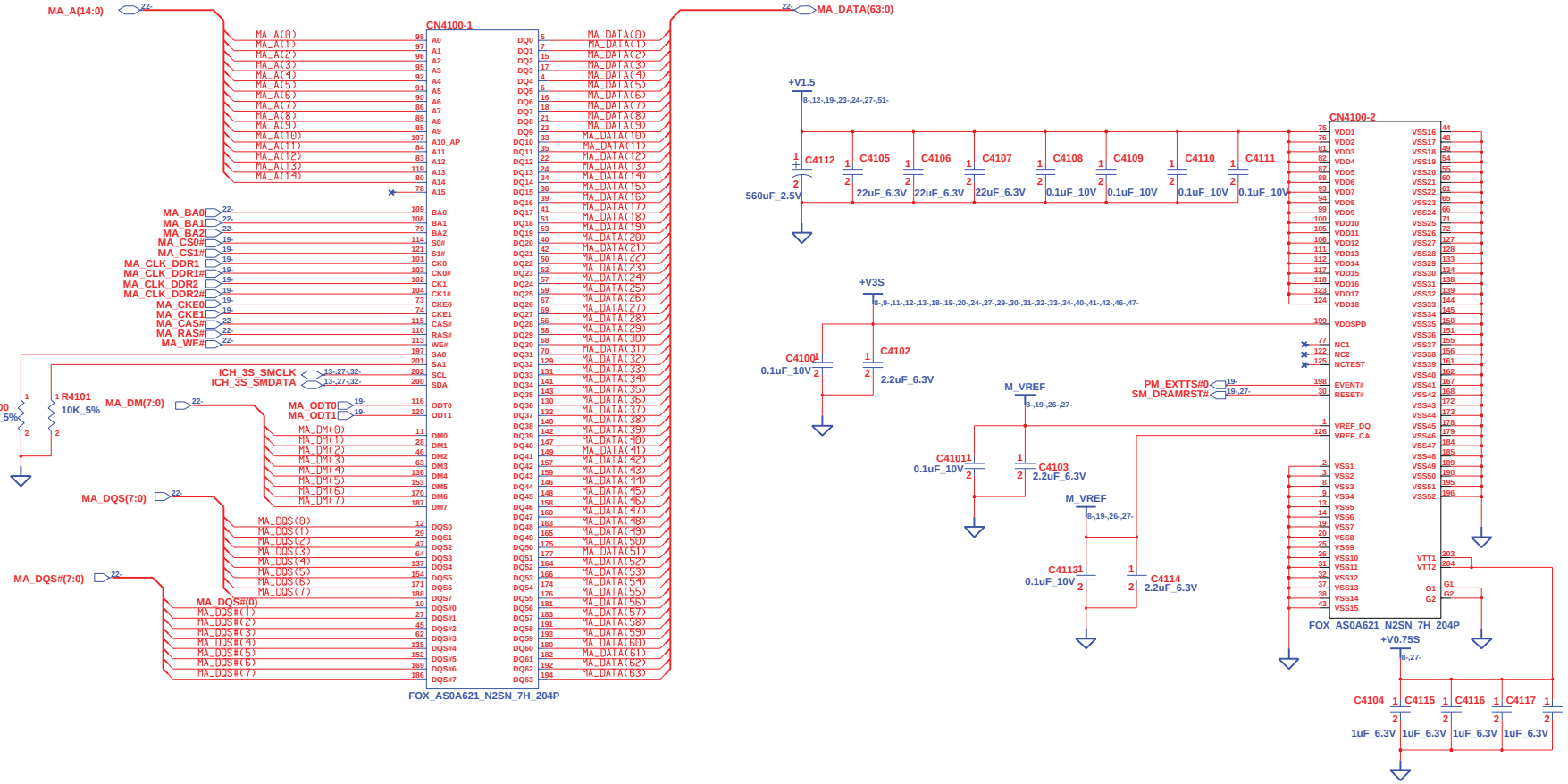

SO DIMM0

SLOT A

INVENTEC			
TITLE MAS10M DDR3-DIMM-0			
SIZE A3	CODE CS	DOC. NUMBER 1310A23553-0-0	REV A02
CHANGE by KOBE	23-Mar-2010	SHEET 26 OF 52	

WWW.AliSaler.Com

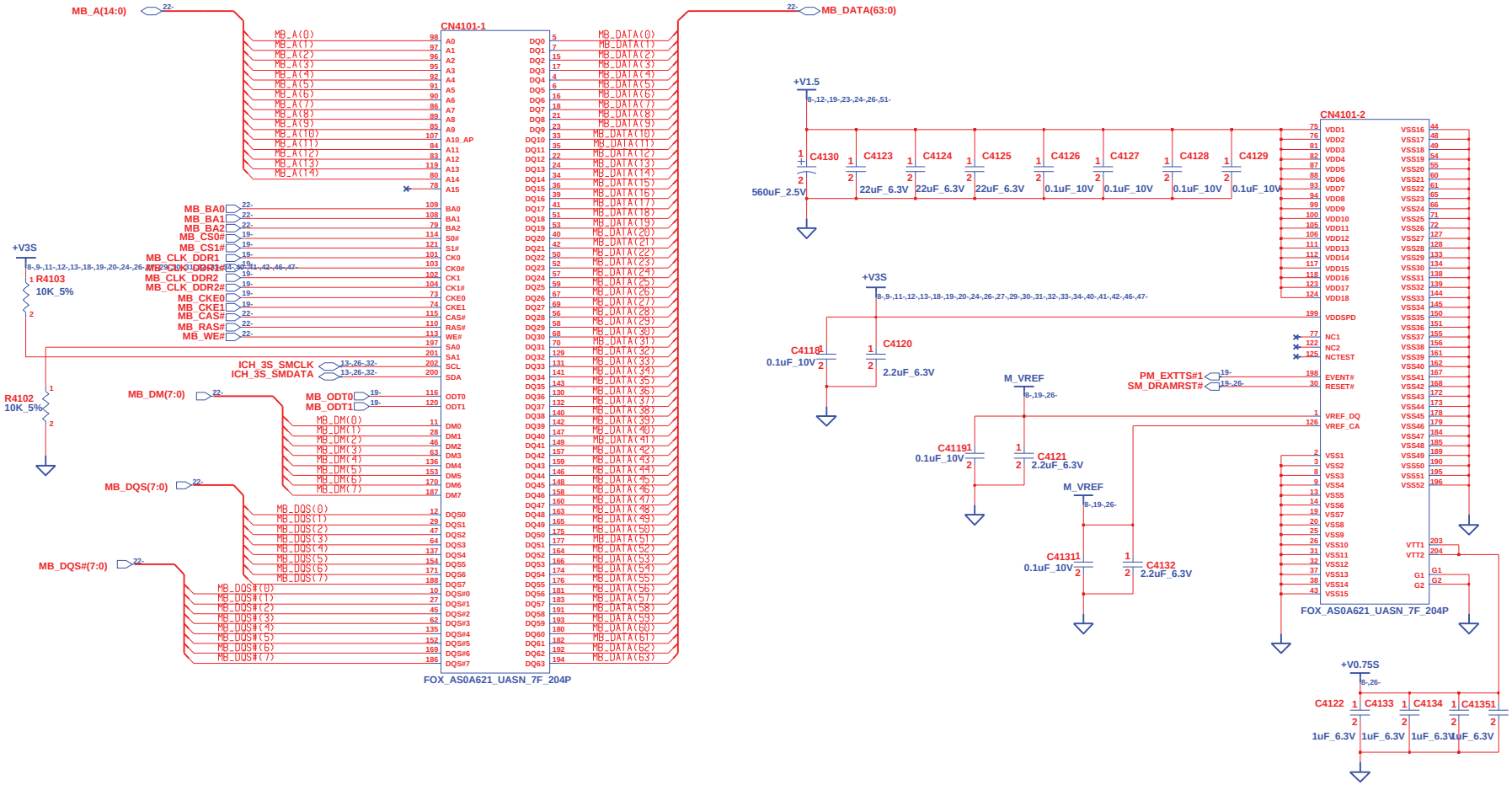

SO DIMM1

SLOT B

INVENTEC			
TITLE	MAS10M DDR3-DIMM1		
SIZE A3	CODE CS	DOC. NUMBER 1310A23553-0-0	REV A02
CHANGE by KOBE	23-Mar-2010	SHEET 27 OF 52	

WWW.AliSaler.Com

BLANK

INVENTEC					
TITLE	MAS10M BLANK				
SIZE	CODE	DOC. NUMBER		REV	
A3	CS	1310A23553-0-0		A02	
CHANGE by	KOBE	27-Sep-2003	SHEET	28	OF 52

WWW.AliSaler.Com

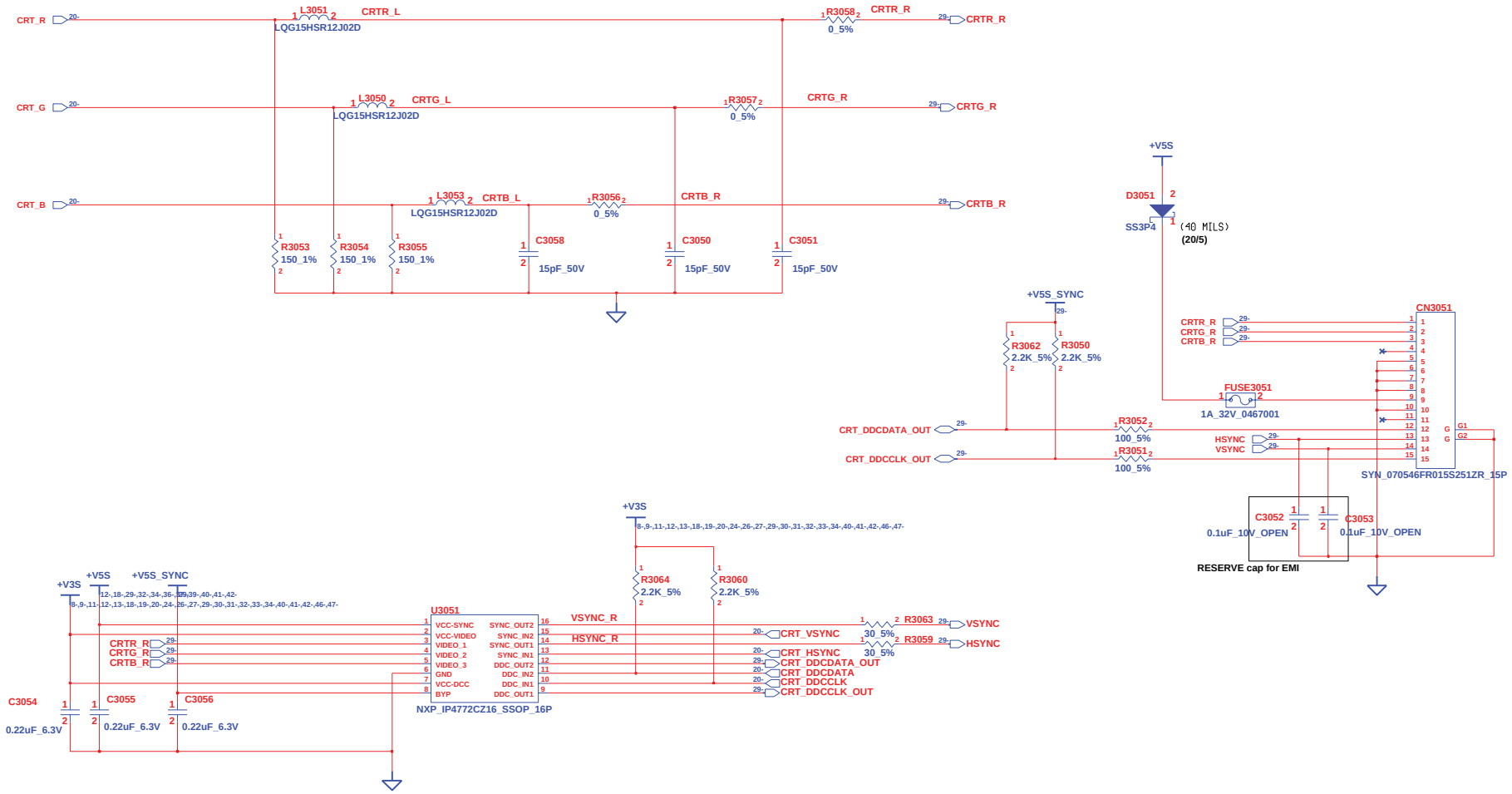

INVENTEC			
TITLE MAS10M CRT CONN			
SIZE A3	CODE CS	DOC. NUMBER 1310A23553-0-0	REV A02
CHANGE by KOBE	23-Mar-2010	SHEET 29 OF 52	

WWW.AliSaler.Com

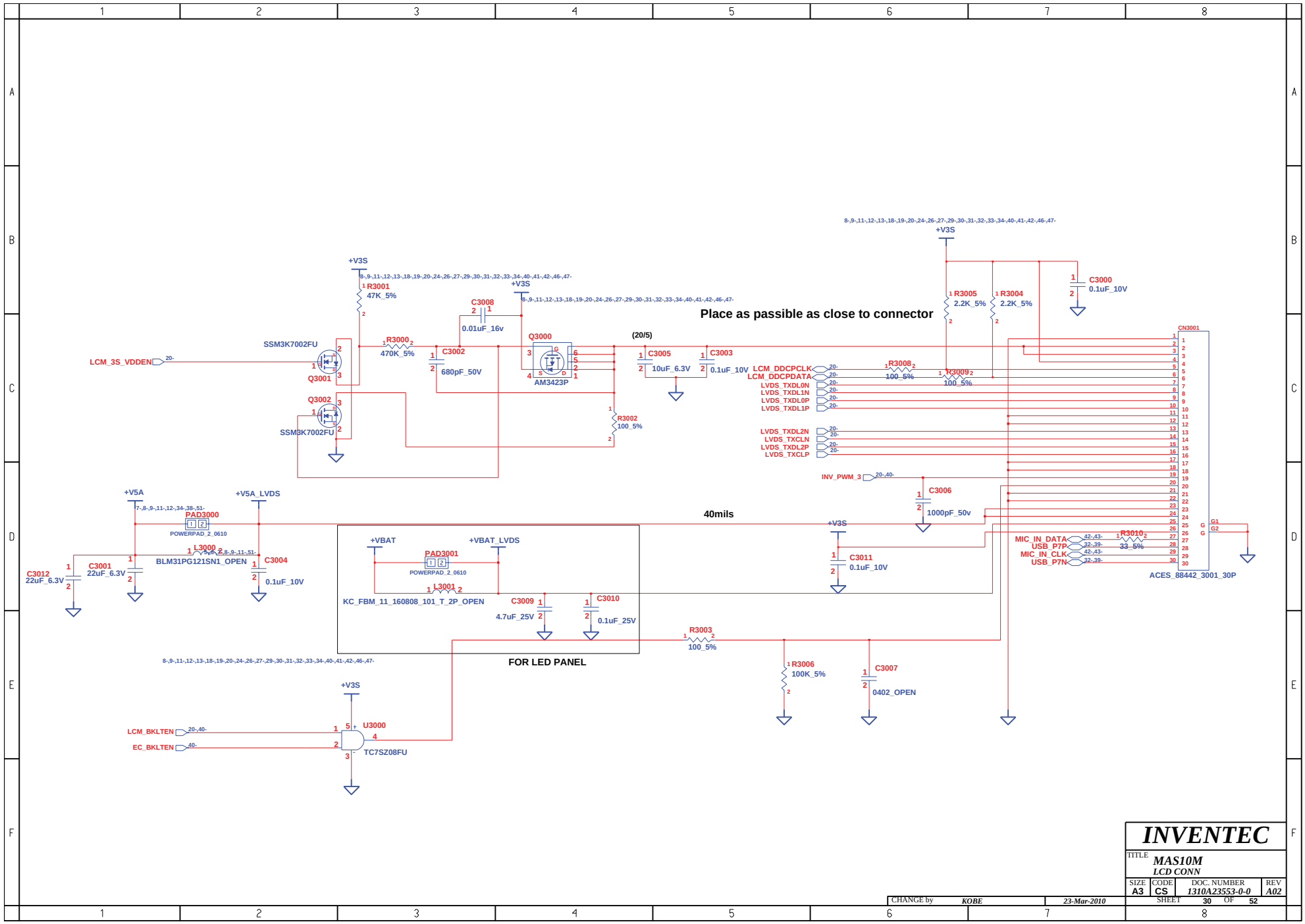

INVENTEC			
TITLE MAS10M LCD CONN			
SIZE A3	CODE CS	DOC. NUMBER 1310A23553-0-0	REV A02
CHANGE by KOBE	23-Mar-2010	SHEET 30 OF 52	

WWW.AliSaler.Com

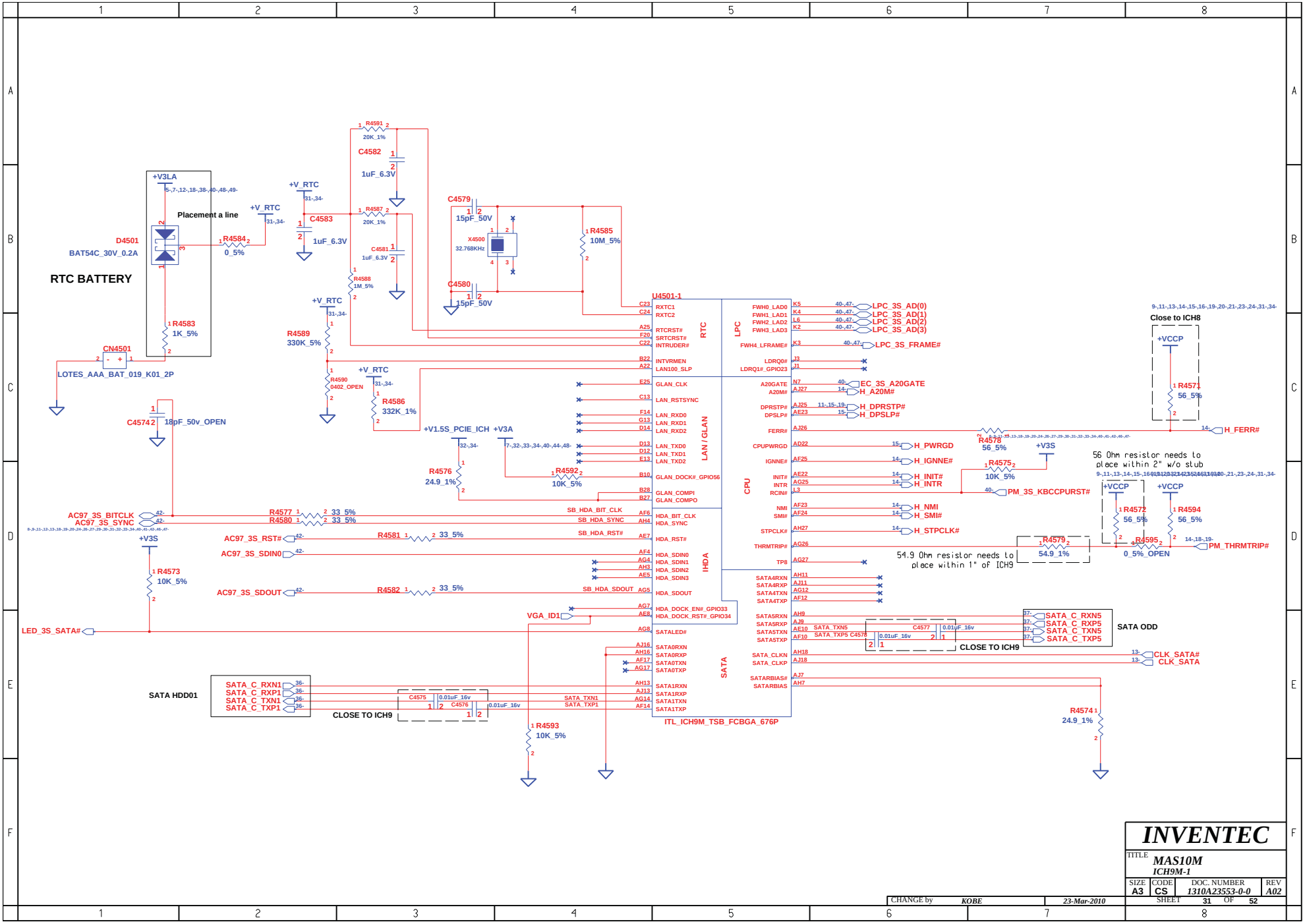

INVENTEC			
TITLE MAS10M ICH9M-1			
SIZE A3	CODE CS	DOC. NUMBER 1310A23553-0-0	REV A02
CHANGE by KOBE	23-Mar-2010	SHEET 31 OF 52	

WWW.AliSaler.Com

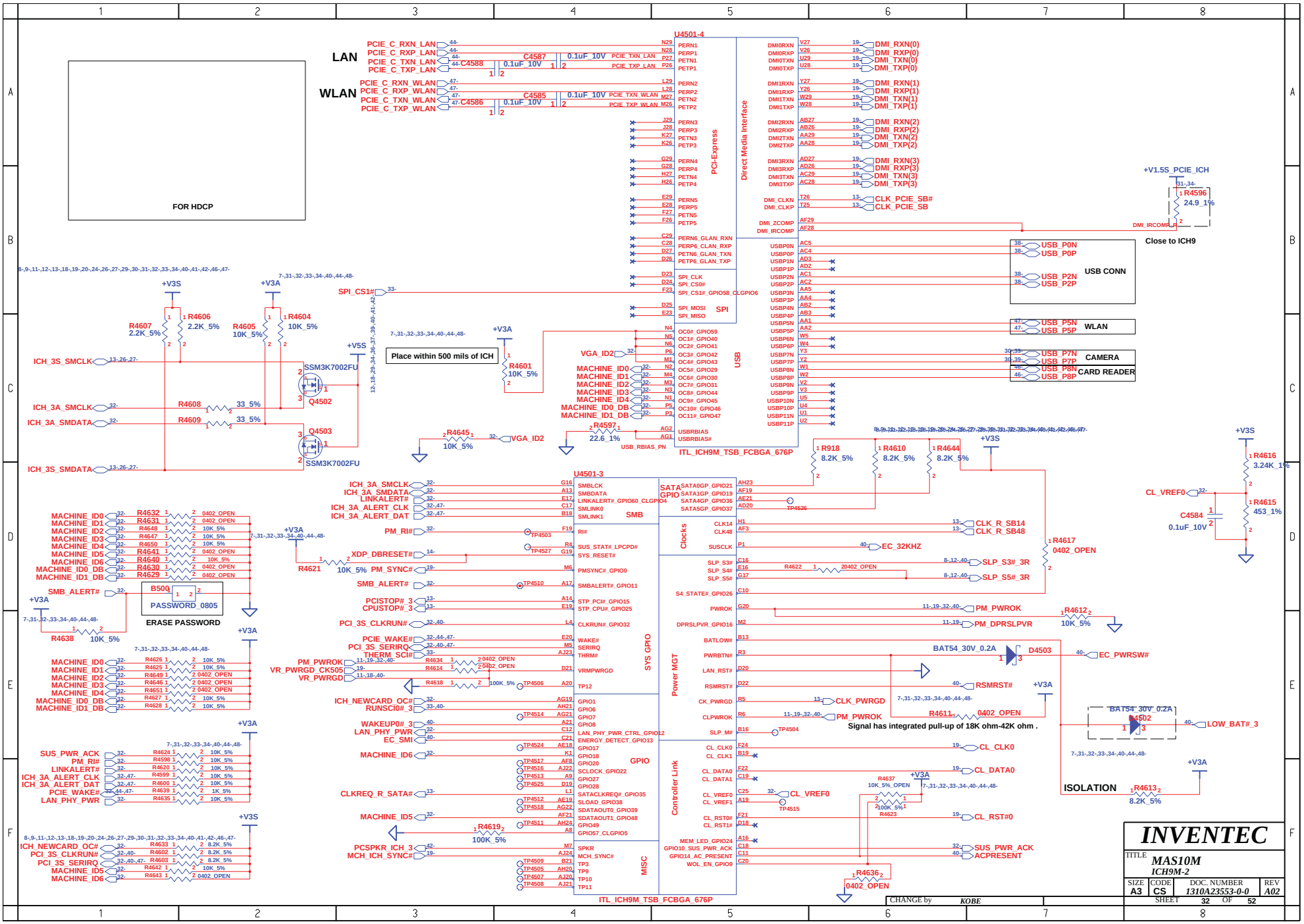

WWW.AliSaler.Com

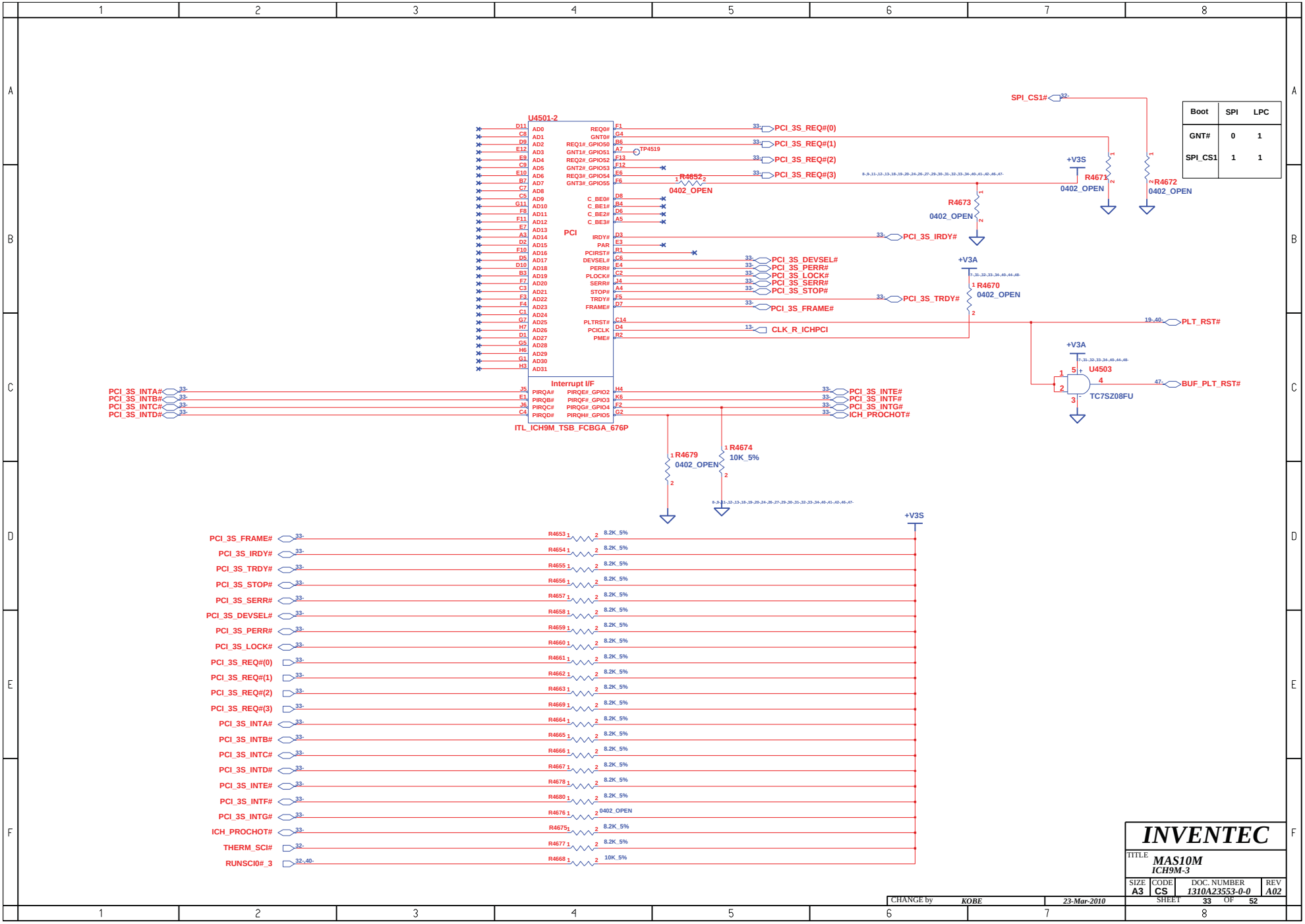

Boot	SPI	LPC
GNT#	0	1
SPI_CS1	1	1

INVENTEC

TITLE MAS10M
ICH9M-3

SIZE	CODE	DOC. NUMBER	REV
A3	CS	1310A23553-0-0	A02

CHANGE by KOBE 23-Mar-2010

SHEET 33 OF 52

WWW.AliSaler.Com

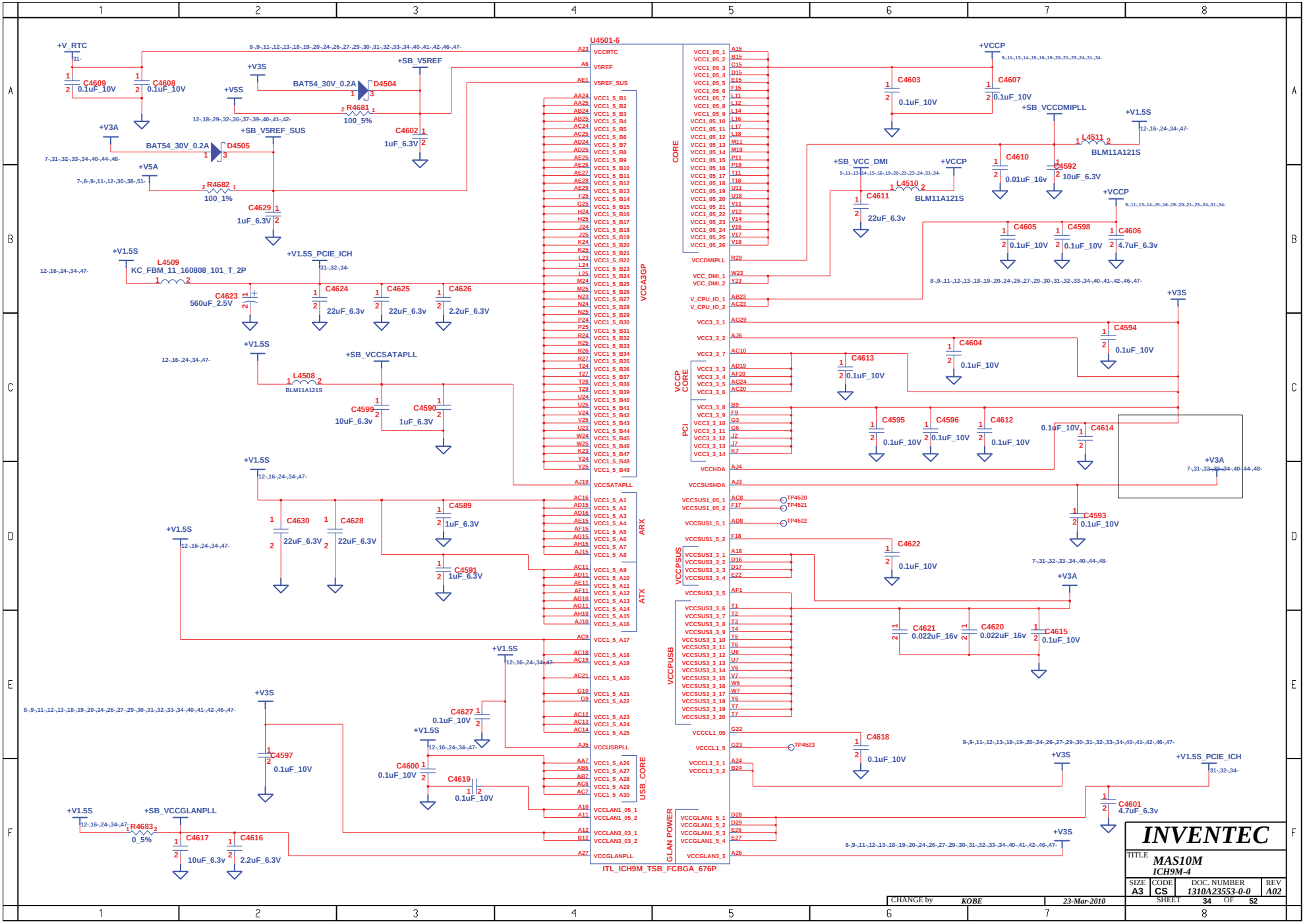

WWW.AliSaler.Com

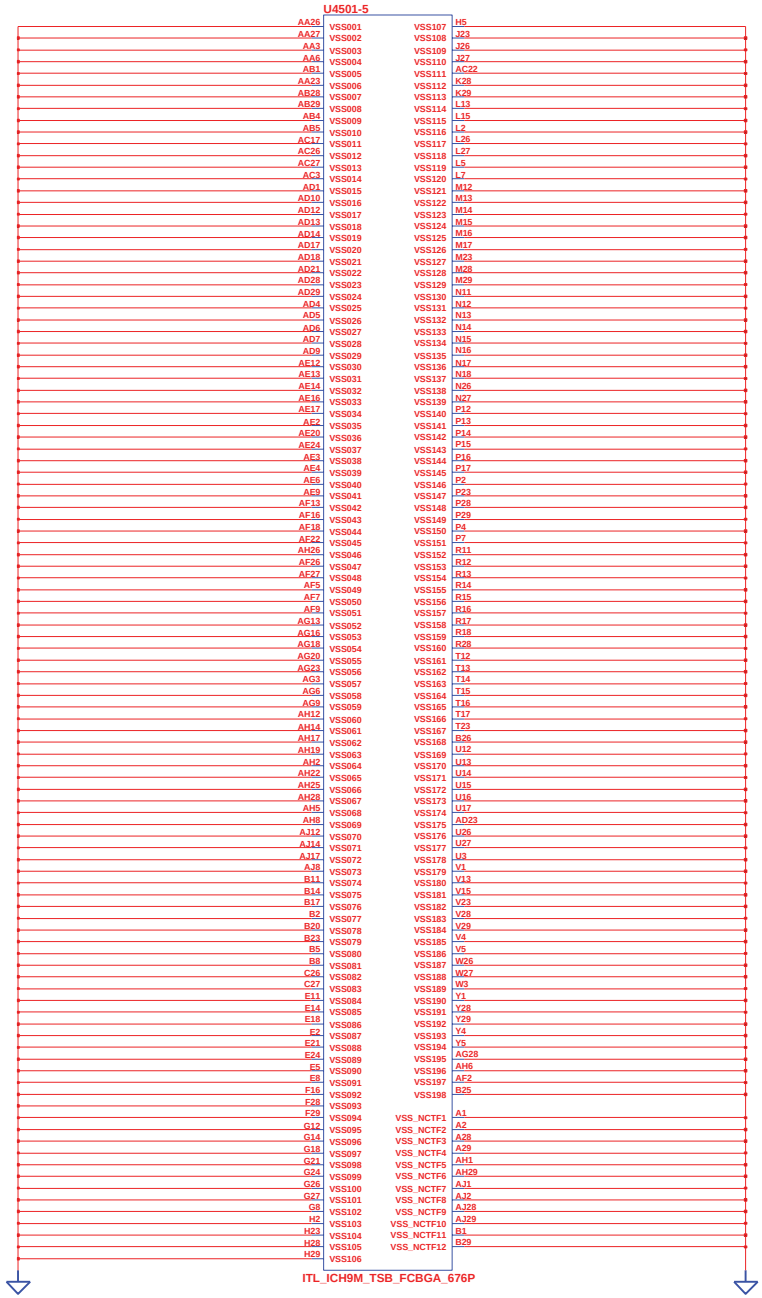

INVENTEC			
TITLE MAS10M ICH9M-5			
SIZE A3	CODE CS	DOC. NUMBER 1310A23553-0-0	REV A02
CHANGE by KOBE	23-Mar-2010	SHEET 35 OF 52	

WWW.AliSaler.Com

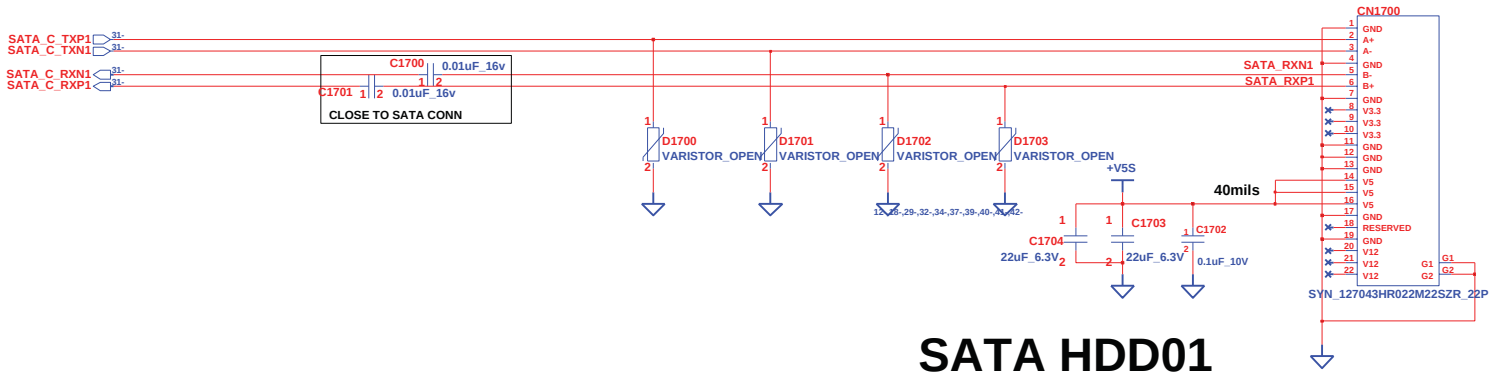

SATA HDD01

INVENTEC			
TITLE MAS10M HDD CONN			
SIZE A3	CODE CS	DOC. NUMBER 1310A23553-0-0	REV A02
CHANGE by KOBE	23-Mar-2010	SHEET 36 OF 52	

WWW.AliSaler.Com

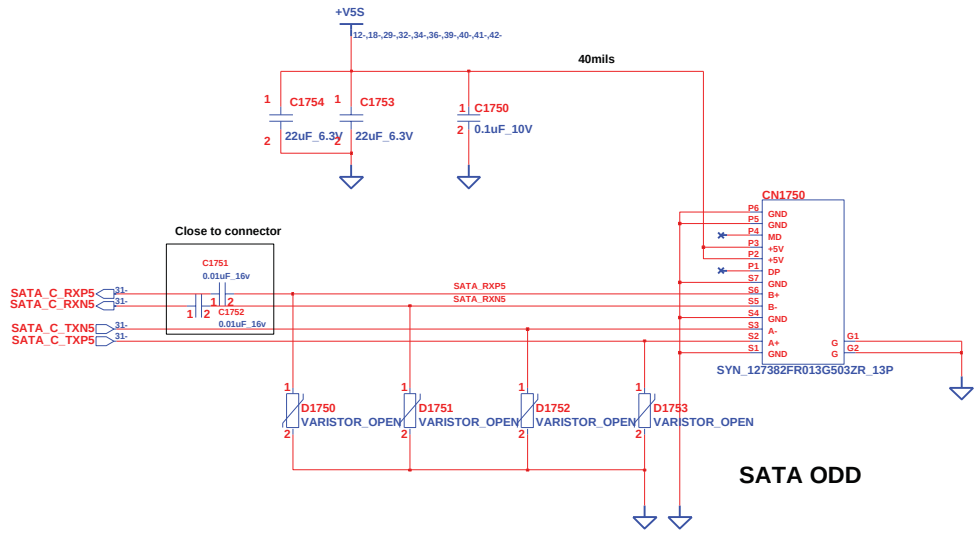

INVENTEC			
TITLE MAS10M SATA ODD			
SIZE A3	CODE CS	DOC. NUMBER 1310A23553-0-0	REV A02
CHANGE by KOBE	23-Mar-2010	SHEET 37 OF 52	

WWW.AliSaler.Com

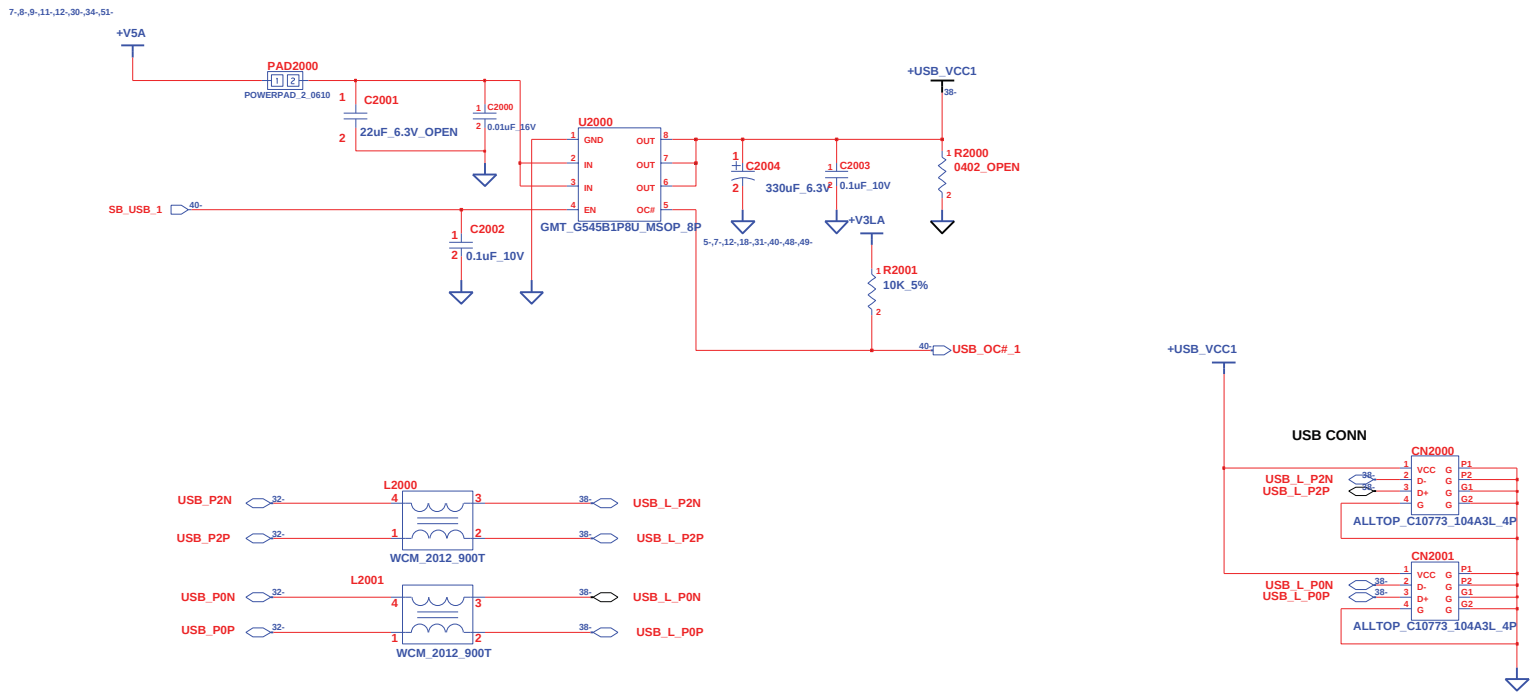

CHANGE by	KOBE	23-Mar-2010	

INVENTEC

TITLE *MAS10M*
USB CONN/USB(DB)

SIZE	CODE	DOC. NUMBER	REV
A3	CS	1310A23553-0-0	A02

SHEET 38 OF 52

WWW.AliSaler.Com

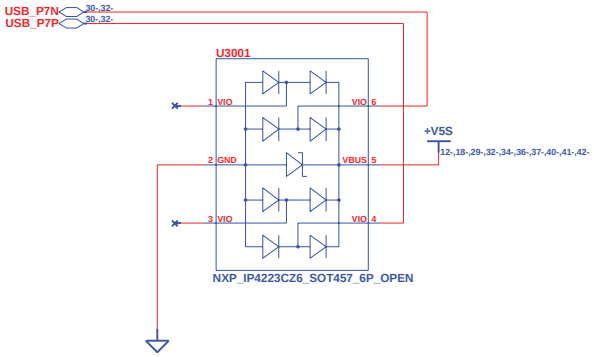

INVENTEC			
TITLE MAS10M Camera			
SIZE A3	CODE CS	DOC. NUMBER 1310A23553-0-0	REV A02
CHANGE by KOBE	23-Mar-2010	SHEET 39 OF 52	

WWW.AliSaler.Com

SMB1	SMB2	SMB3
1.Battery	1.Charge	
	2.CPU thermal sensor	

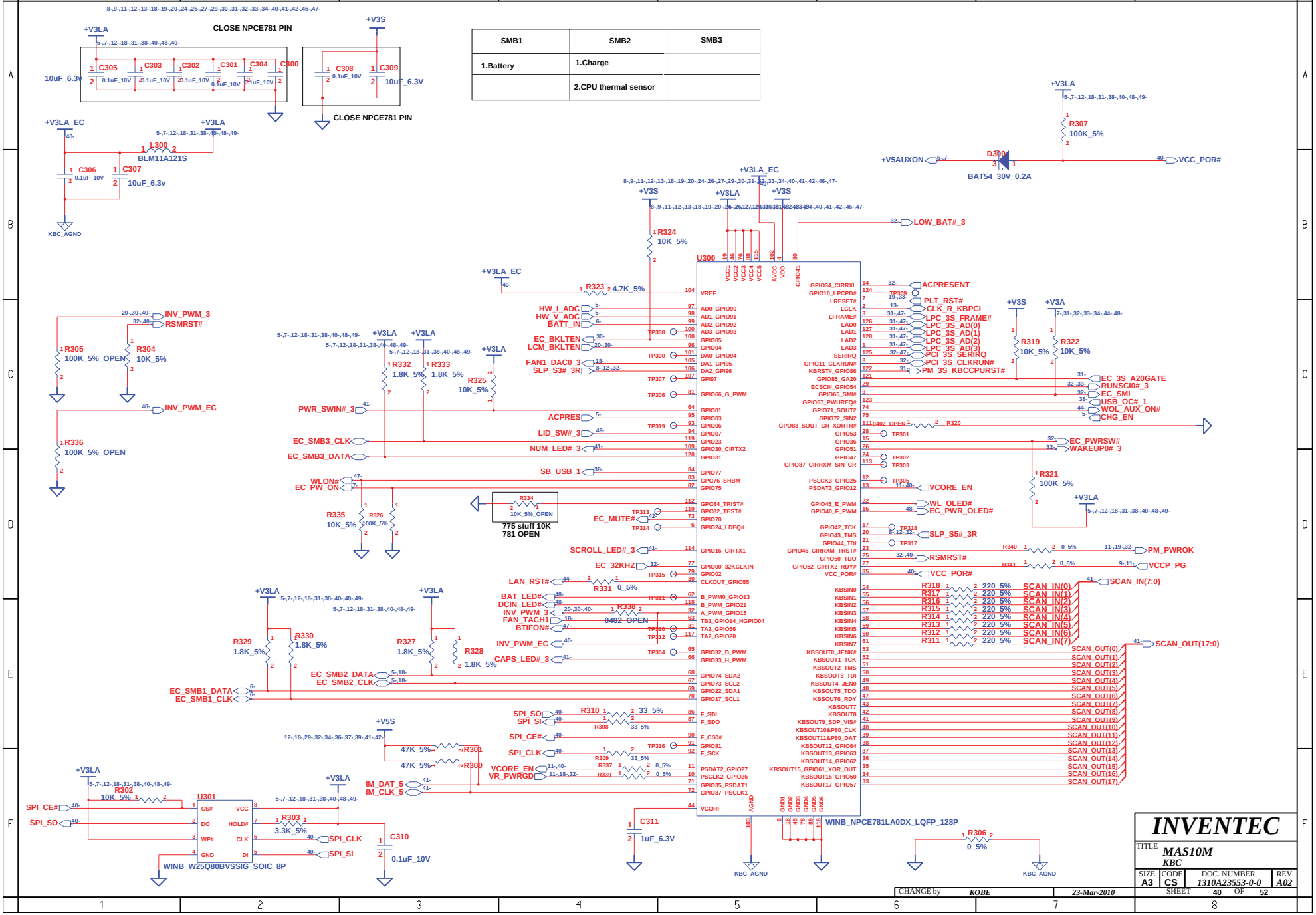

WWW.AliSaler.Com

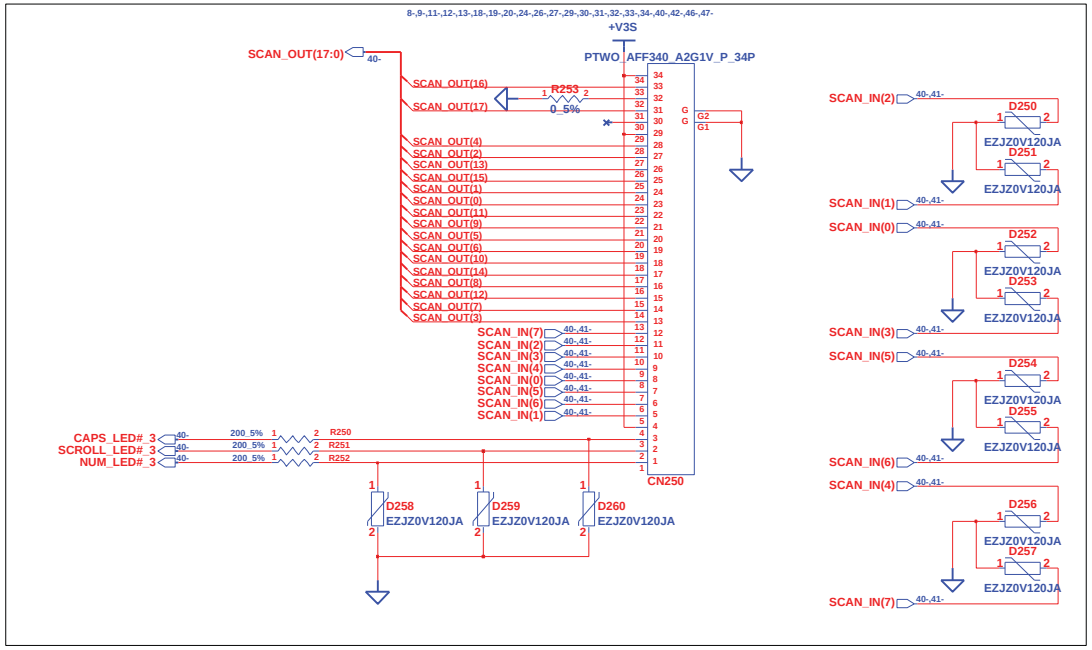

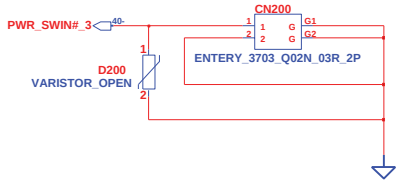

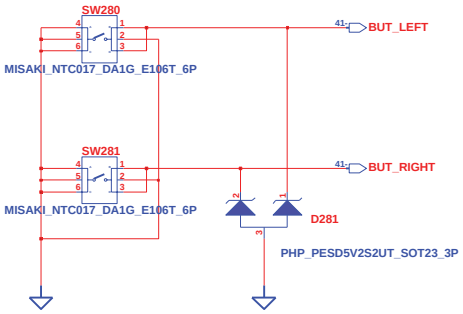

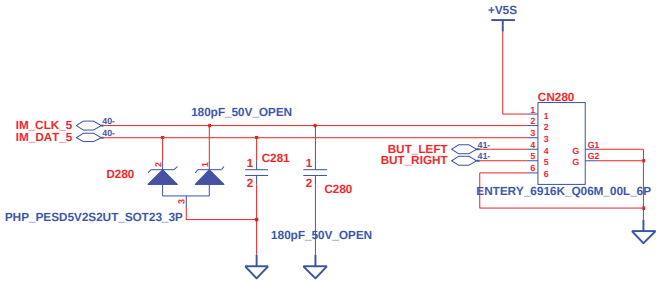

INVENTEC			
TITLE MAS10M K/B & TP/B CONN			
SIZE A3	CODE CS	DOC. NUMBER 1310A23553-0-0	REV A02
CHANGE by KOBE	23-Mar-2010	SHEET 41 OF 52	

WWW.AliSaler.Com

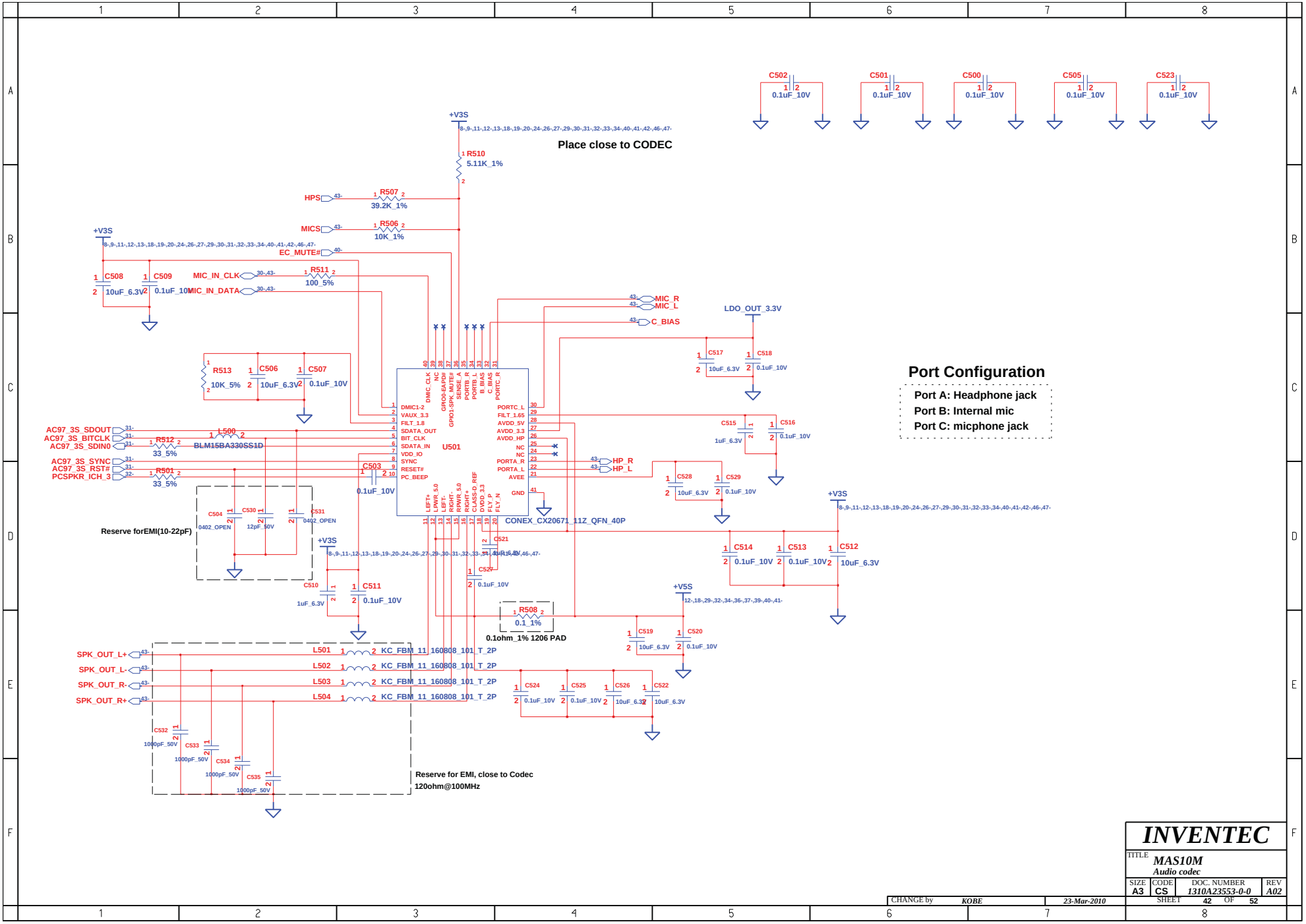

WWW.AliSaler.Com

INTERNAL SPEAKERS

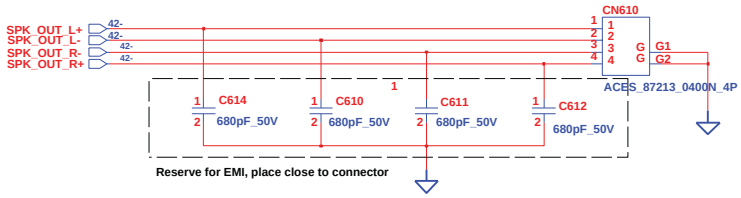

AUDIO JACKS

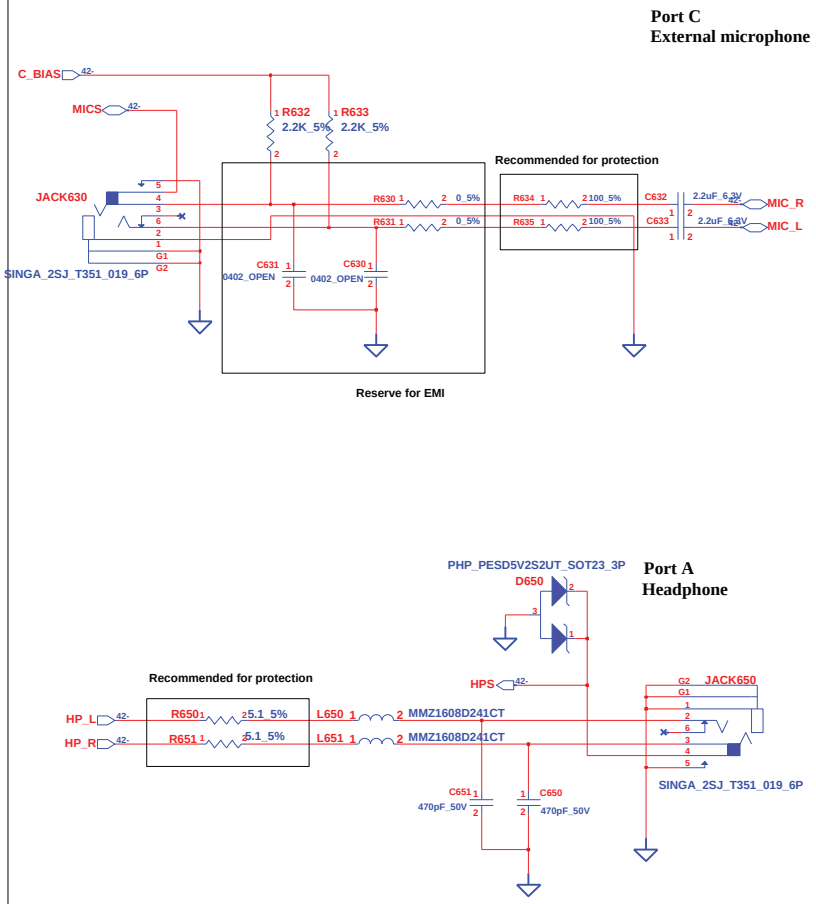

INTERNAL MIC

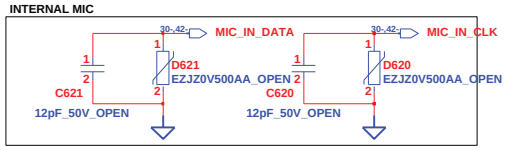

INVENTEC			
TITLE MAS10M Audio AMP&MIC&Speaker			
SIZE A3	CODE CS	DOC. NUMBER 1310A23553-0-0	REV A02
CHANGE by KOBE	23-Mar-2010	SHEET 43 OF 52	

WWW.AliSaler.Com

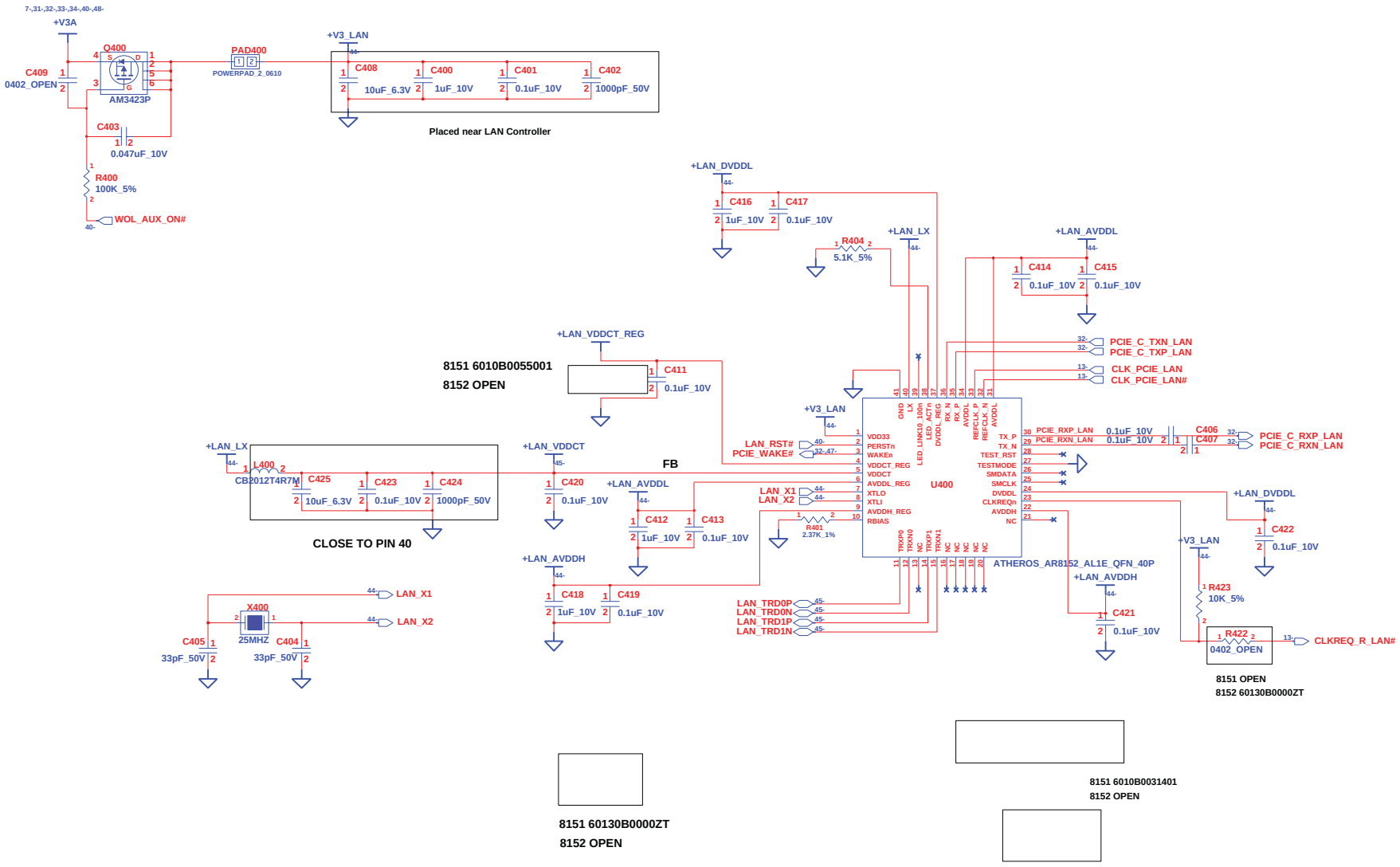

INVENTEC

TITLE MAS10M LAN

SIZE	CODE	DOC. NUMBER	REV
A3	CS	1310A23553-0-0	A02

CHANGE by KOBE 23-Mar-2010 SHEET 44 OF 52

WWW.AliSaler.Com

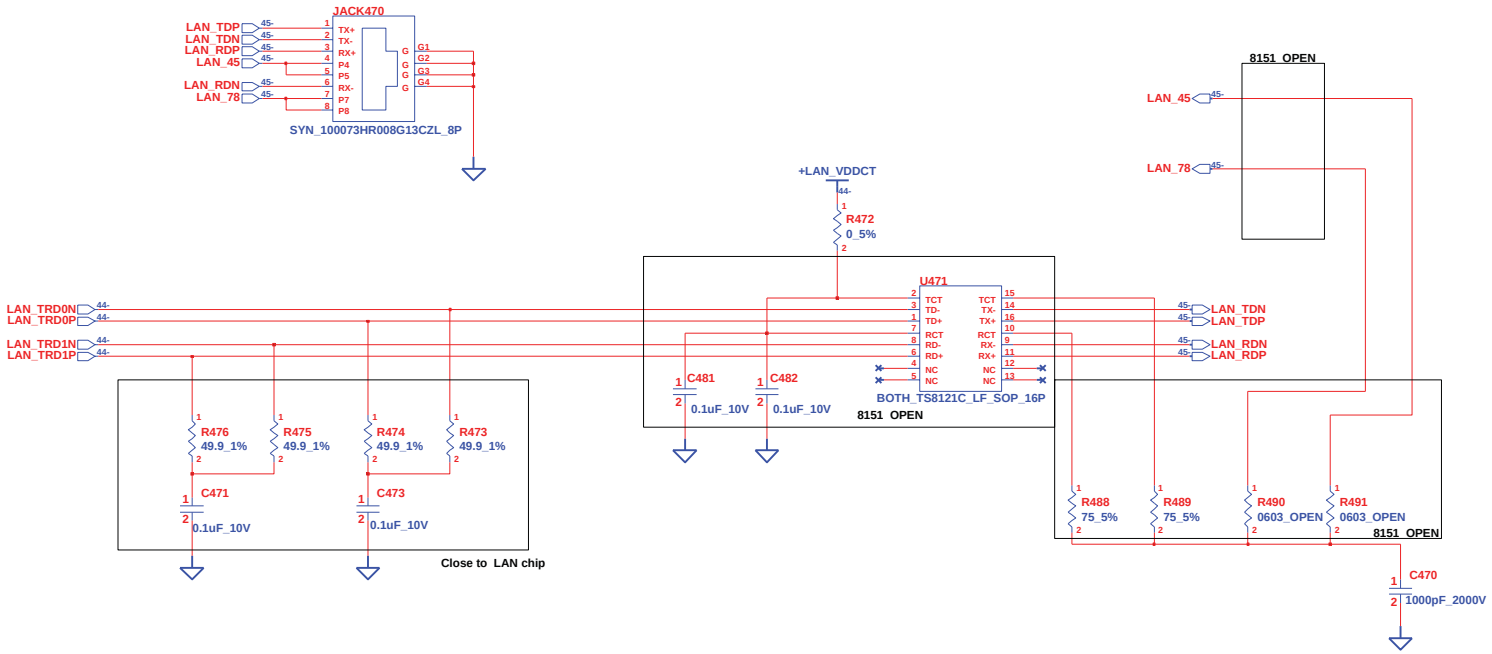

INVENTEC

TITLE **MAS10M**
Transformer&RJ45

SIZE	CODE	DOC. NUMBER	REV
A3	CS	1310A23553-0-0	A02

CHANGE by KOBE 23-Mar-2010

SHEET 45 OF 52

WWW.AliSaler.Com

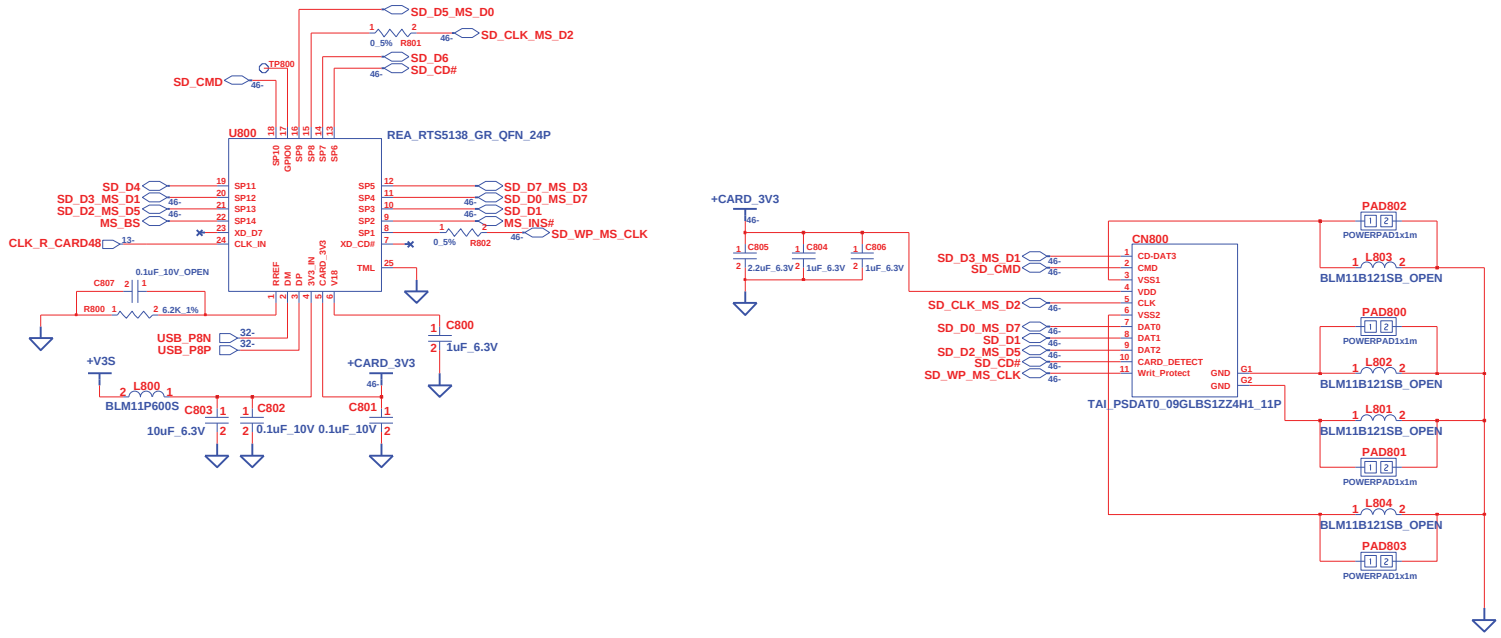

INVENTEC			
TITLE MAS10M USB Card Reader			
SIZE A3	CODE CS	DOC. NUMBER 1310A23553-0-0	REV A02
CHANGE by KOBE	23-Mar-2010	SHEET 46 OF 52	

WWW.AliSaler.Com

Wireless & Debug card

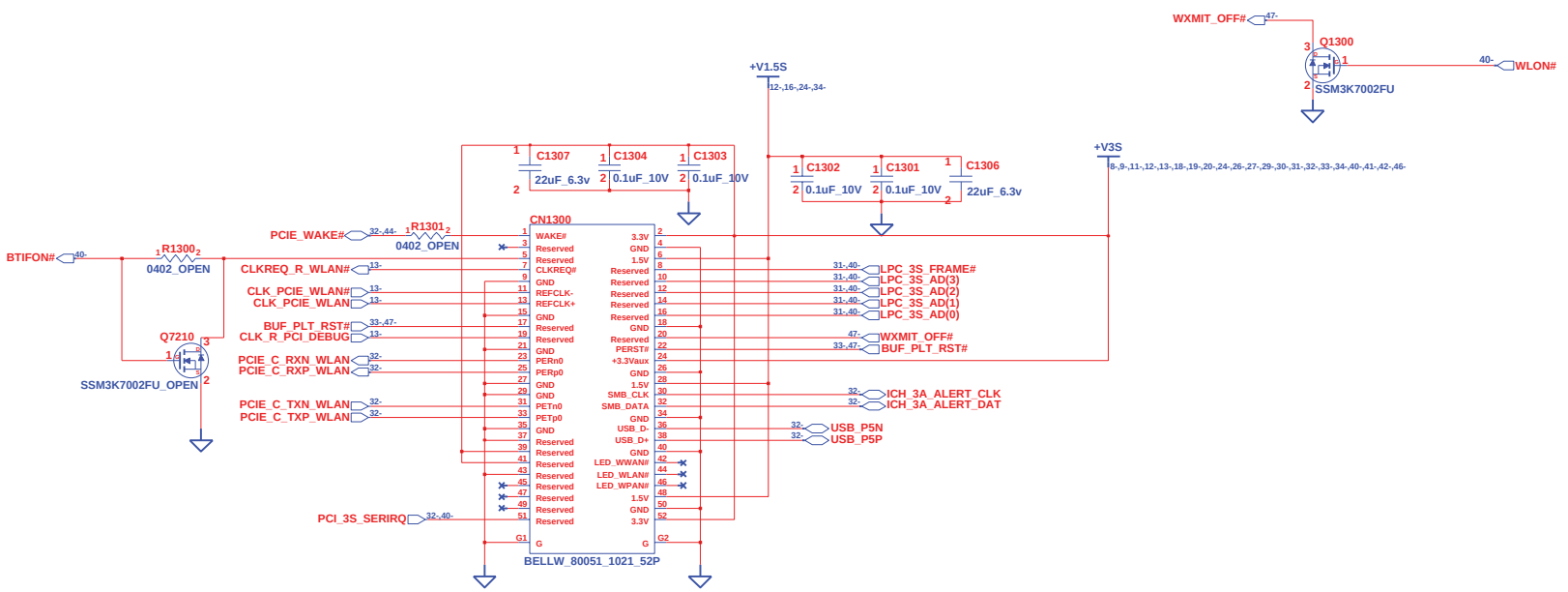

INVENTEC			
TITLE MAS10M Wireless & debug card			
SIZE A3	CODE CS	DOC. NUMBER 1310A23553-0-0	REV A02
CHANGE by KOBE	23-Mar-2010	SHEET 47 OF 52	

WWW.AliSaler.Com

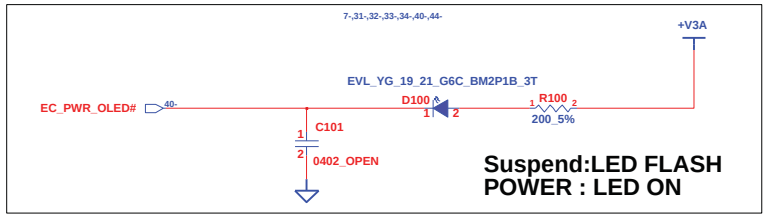

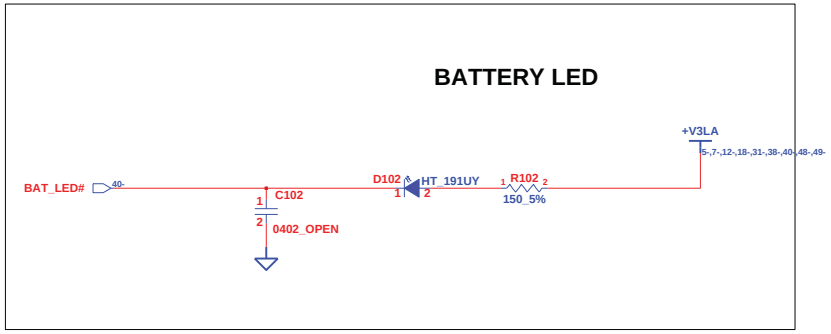

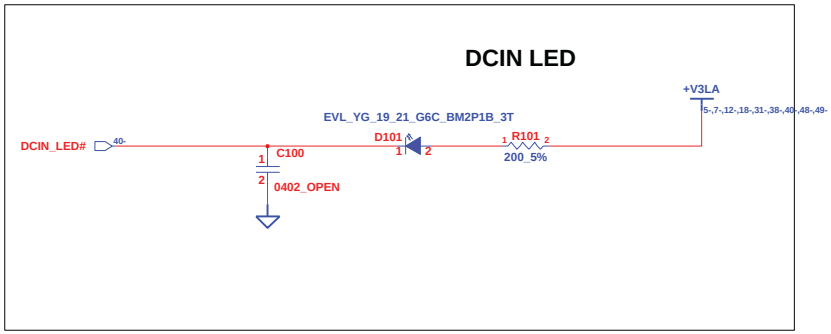

INVENTEC			
TITLE MAS10M LED & Hotkey CONN			
SIZE A3	CODE CS	DOC. NUMBER 1310A23553-0-0	REV A02
CHANGE by KOBE	23-Mar-2010	SHEET 48 OF 52	

WWW.AliSaler.Com

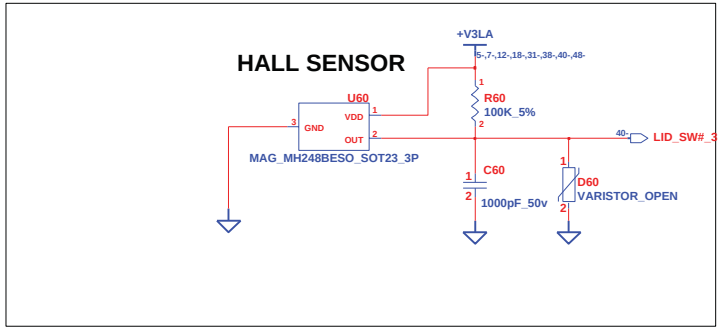

INVENTEC			
TITLE	MAS10M Kill Swich & Hall Sensor		
SIZE A3	CODE CS	DOC. NUMBER 1310A23553-0-0	REV A02
CHANGE by KOBE	23-Mar-2010	SHEET 49 OF 52	

WWW.AliSaler.Com

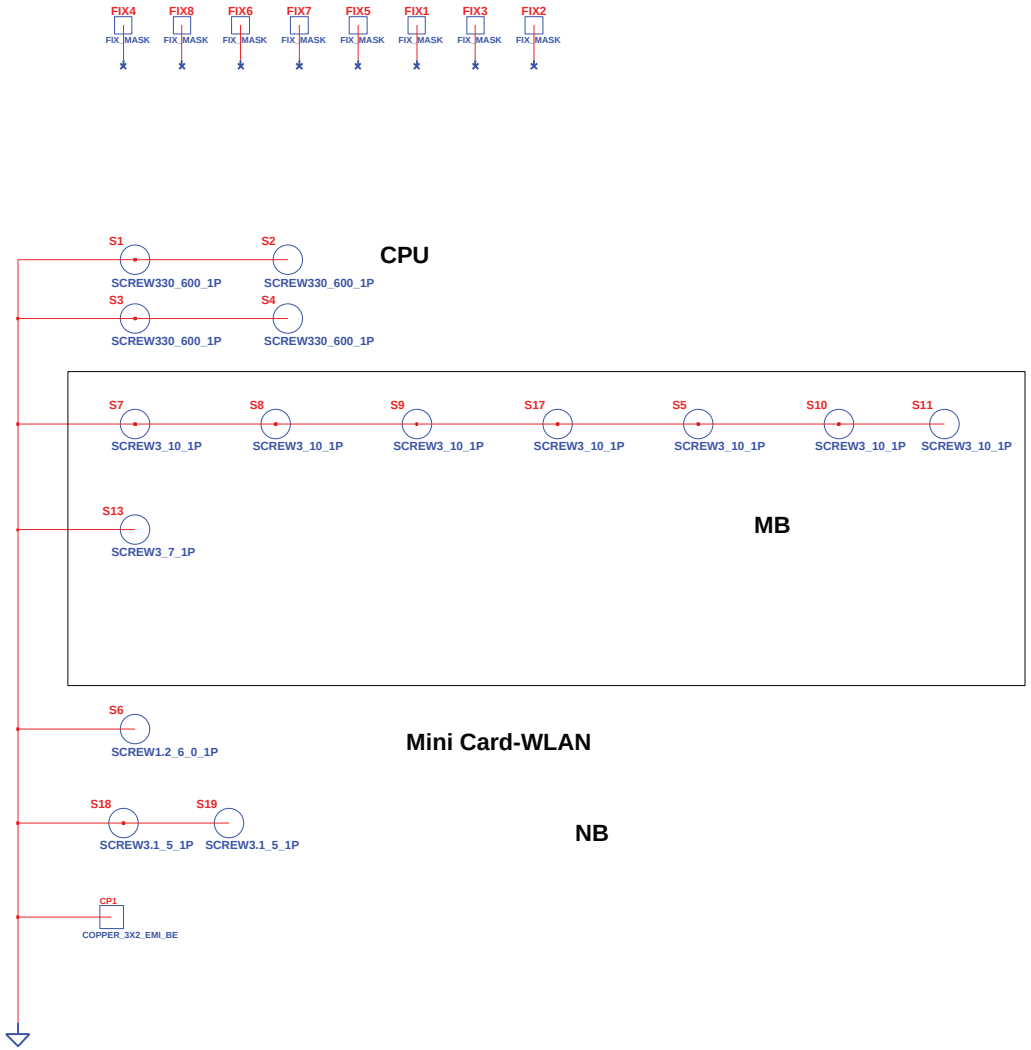

INVENTEC			
TITLE MAS10M Screw			
SIZE A3	CODE CS	DOC. NUMBER 1310A23553-0-0	REV A02
CHANGE by KOBE	23-Mar-2010	SHEET 50 OF 52	

WWW.AliSaler.Com

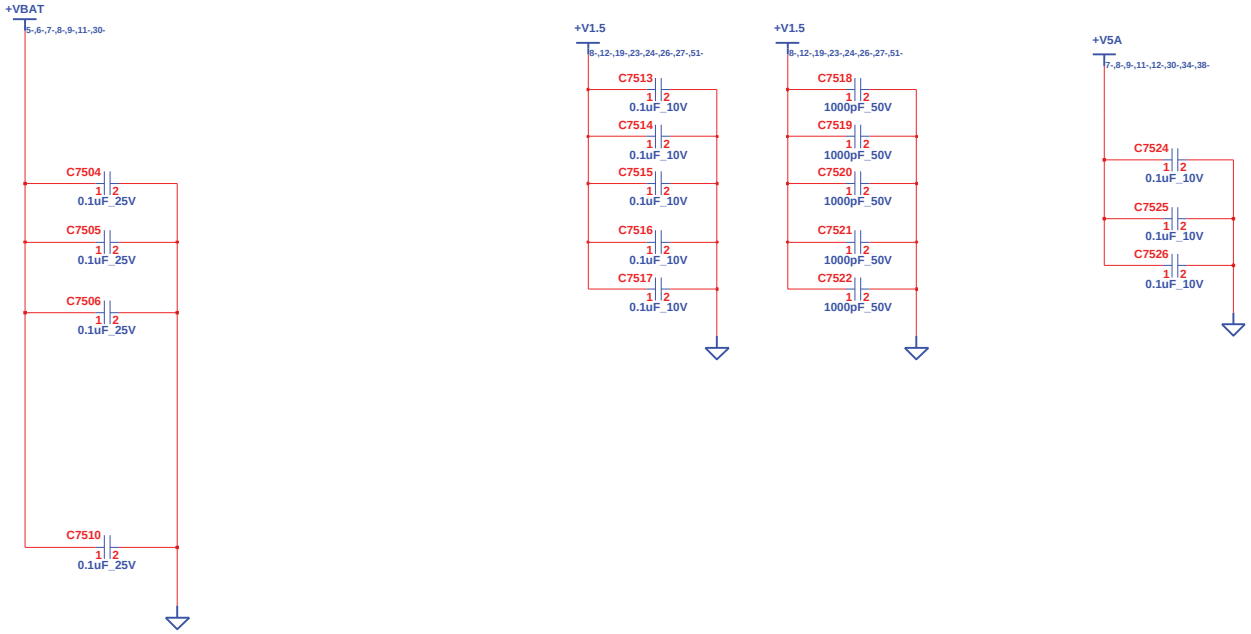

INVENTEC			
TITLE MAS10M EMI			
SIZE A3	CODE CS	DOC. NUMBER 1310A23553-0-0	REV A02
CHANGE by KOBE	23-Mar-2010	SHEET 51 OF 52	

WWW.AliSaler.Com

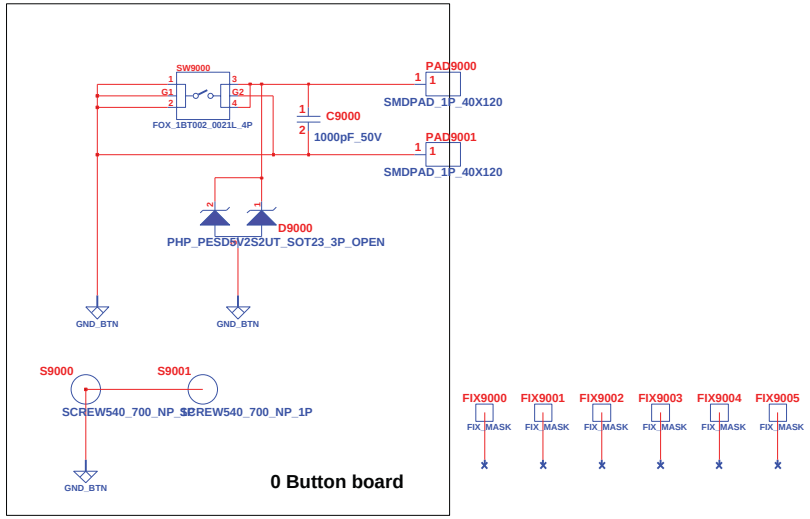

CHANGE by	KOBE	23-Mar-2010	INVENTEC		
			TITLE MAS10M power board		
			SIZE A3	CODE CS	DOC. NUMBER 1310A23553-0-0	REV A02
			SHEET 52 OF 52		

WWW.AliSaler.Com