Manaus 10

CS BUILD

2010.03.18

DATE	CHANGE NO.	REV

	EE	DATE	POWER	DATE
DRAWER				
DESIGN				
CHECK				
RESPONSIBLE				

SIZE = 3 VER :

FILE NAME : XXXX-XXXXXX-XX

P/N XXXXXXXXXXXX

INVENTEC

TITLE *Berlin 10*

SIZE	CODE	DOC. NUMBER	REV
A3	CS	*ES*	*AX1*

SHEET 1 OF 61

WWW.AliSaler.Com

TABLE OF CONTENTS

PAGE
1. COVER PAGE
2. INDEX
3. BLOCK DIAGRAM
4. POWER SEQUENCE BLOCK
5. PCB
6. SYSTEM POWER
7. SYSTEM POWER
8. SYSTEM POWER
9. SYSTEM POWER
10. SYSTEM POWER
11. SYSTEM POWER
12. SYSTEM POWER
13. VGA POWER
14. SYSTEM POWER
15. SUPER I/O(KBC)
16. K/B & TP/B CONN
17. FAN & THERMAL CONTROLLER
18. LAN
19. RJ45 & TRANSFORMER
20. AUDIO CODEC
21. AUDIO AMP
22. BLANK
23. LCM CONN
24. RGB CONN
25. BLANK
26. BLANK
27. BLANK
28. BLANK
29. BLANK
30. SATA HDD & ODD

PAGE
31. BLANK
32. USB CONN
33. BLANK
34. Camera
35. BLANK
36. 3D SENSOR
37. KILL SW
38. Hall sensor
39. LED
40. CLOCK GENERATOR
41. DDR3 DIMM0
42. DDR3 DIMM1
43. CPU 1
44. CPU 2
45. CPU 3
46. CPU 4
47. CPU 5
48. CPU 6
49. PCH 1
50. PCH 2
51. PCH 3
52. PCH 4
53. PCH 5
54. PCH 6
55. PCH 7 POWER
56. PCH 8 POWER
57. PCH 9
58. Hotkey board and 0 BUTTON BOARD
59. Touch pad board
60. EMI

PAGE
61. DDR DAMPING

CHANGE by	Lin, Bob	26-Jan-2010	

INVENTEC

TITLE Berlin 10

SIZE	CODE	DOC. NUMBER	REV
A3	CS	ES	AX1

SHEET 2 OF 61

WWW.AliSaler.Com

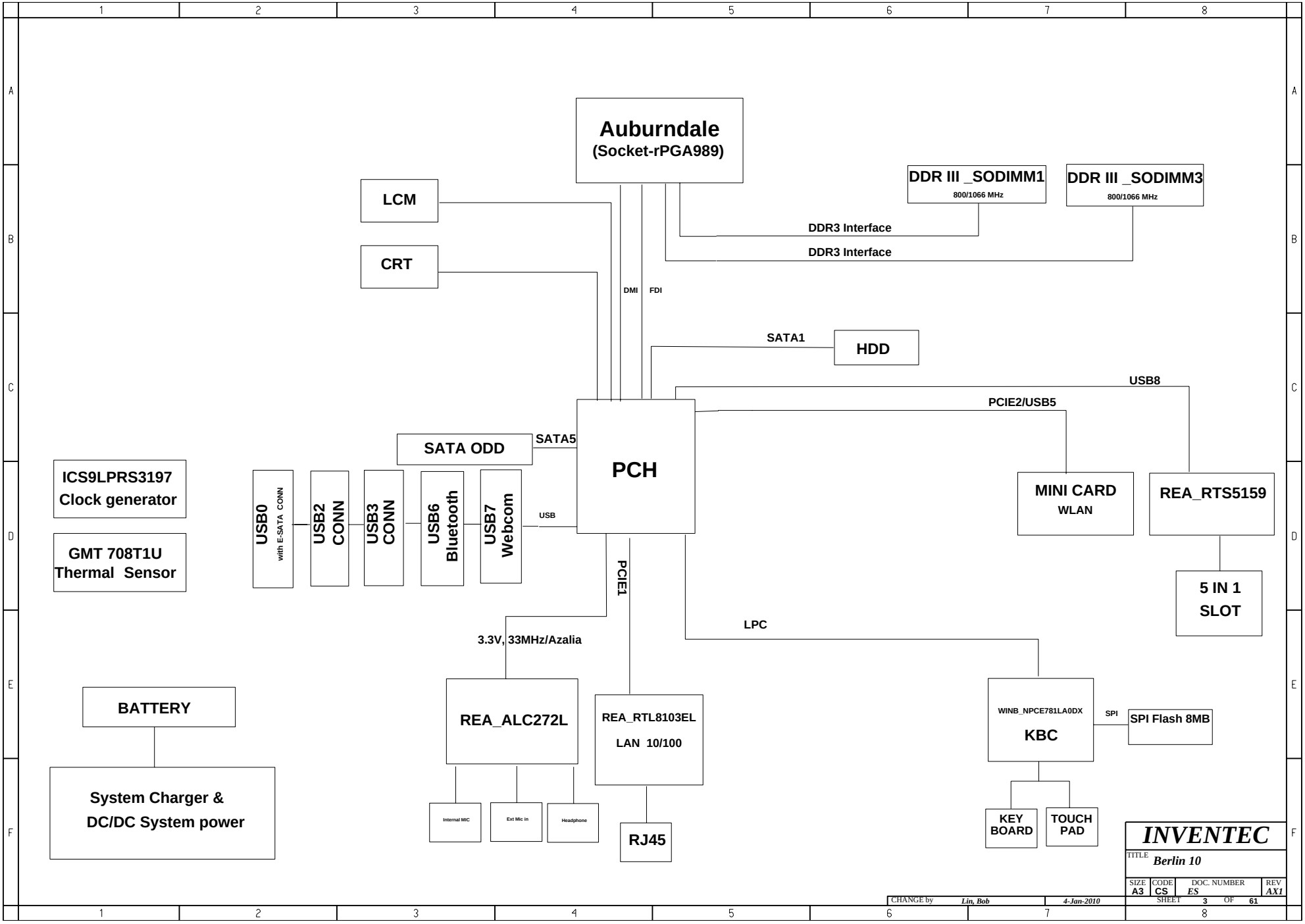

WWW.AliSaler.Com

Add Excel Power map

INVENTEC					
TITLE Berlin 10					
SIZE A3	CODE CS	DOC. NUMBER ES			REV AX1
CHANGE by Lin, Bob		25-Nov-2009	SHEET 4 OF 61		

WWW.AliSaler.Com

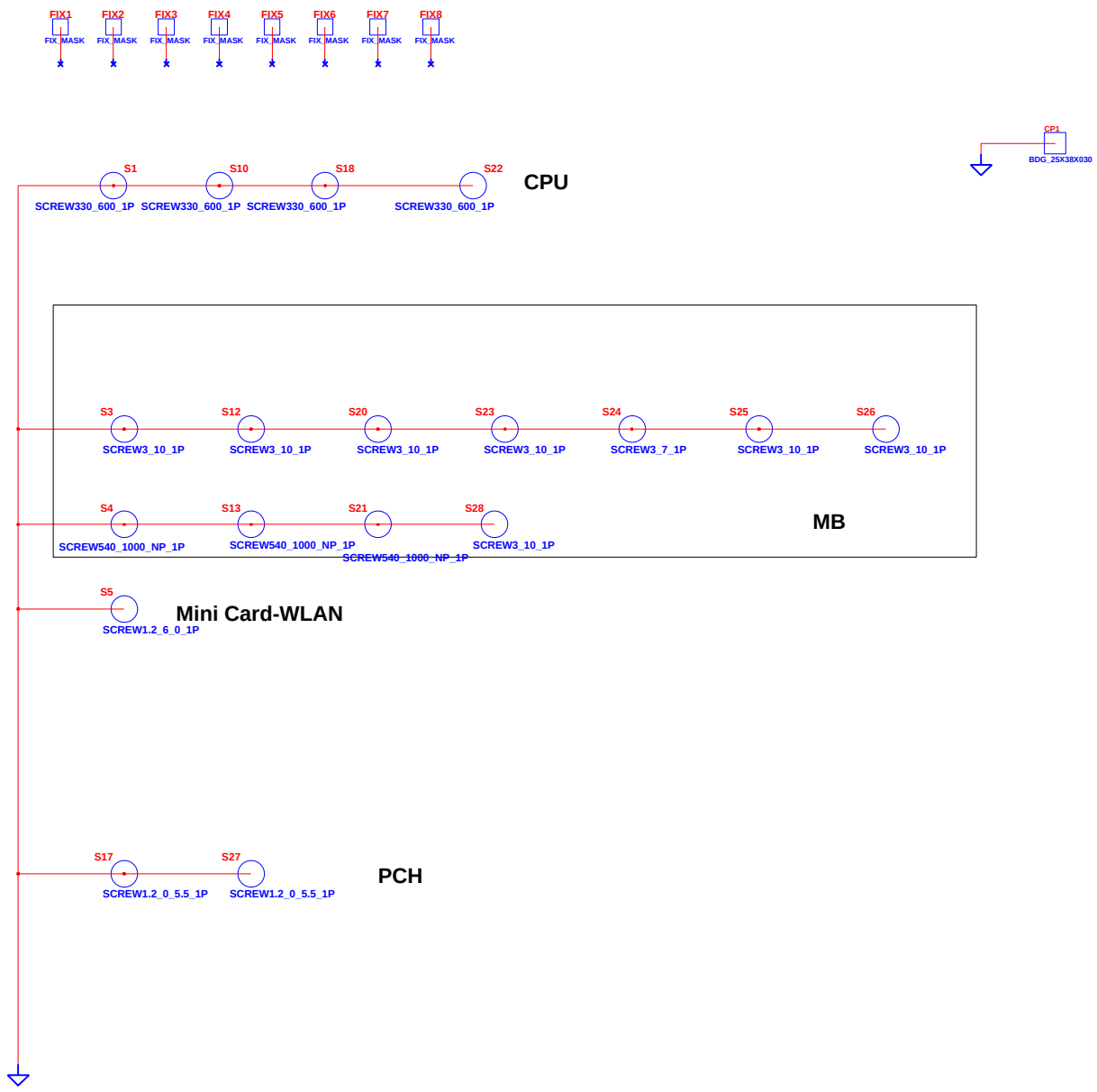

INVENTEC			
TITLE	Berlin 10 SCREW		
SIZE A3	CODE CS	DOC. NUMBER ES	REV AX1
CHANGE by Lin, Bob	25-Nov-2009	SHEET 5 OF 61	

WWW.AliSaler.Com

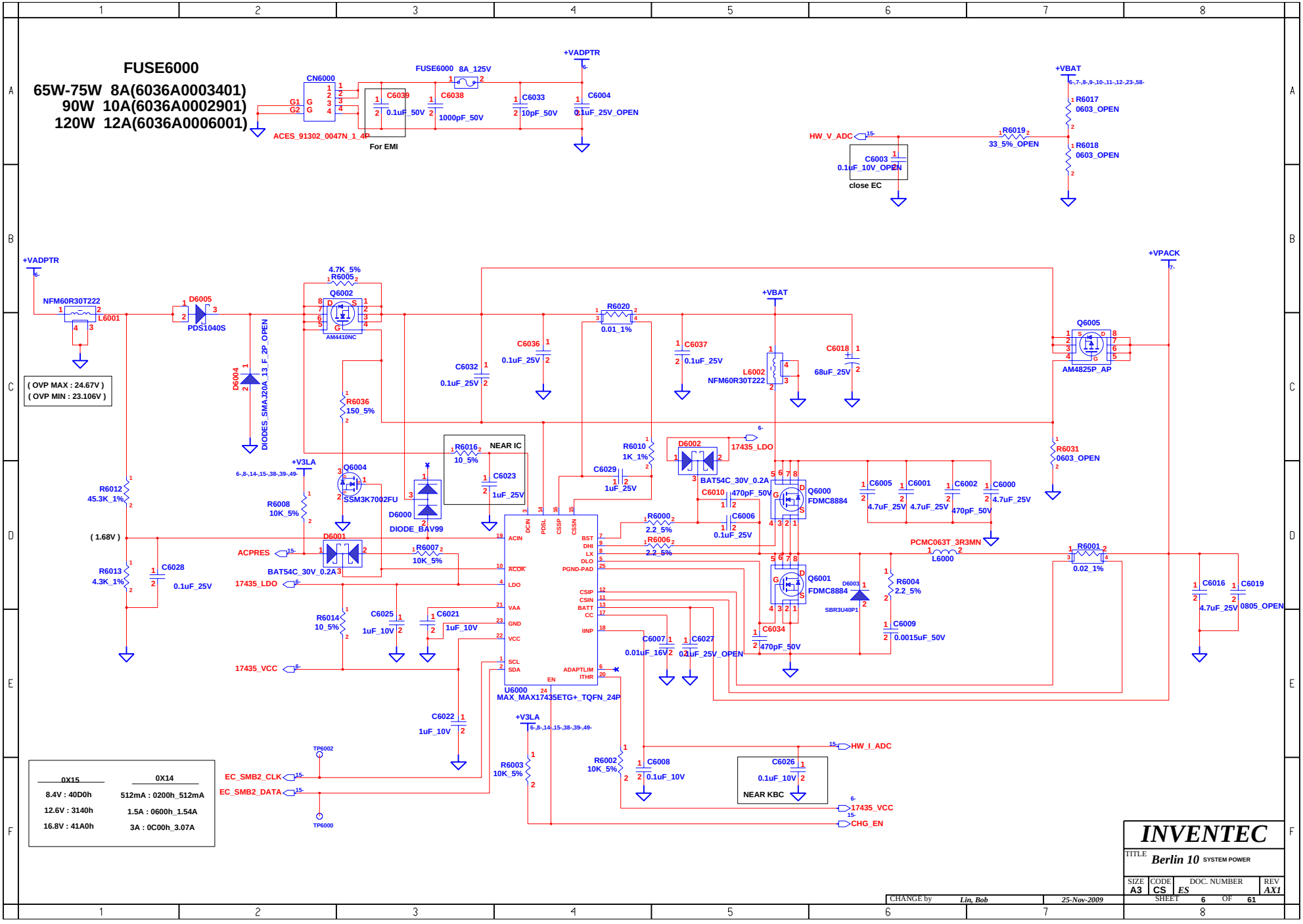

WWW.AliSaler.Com

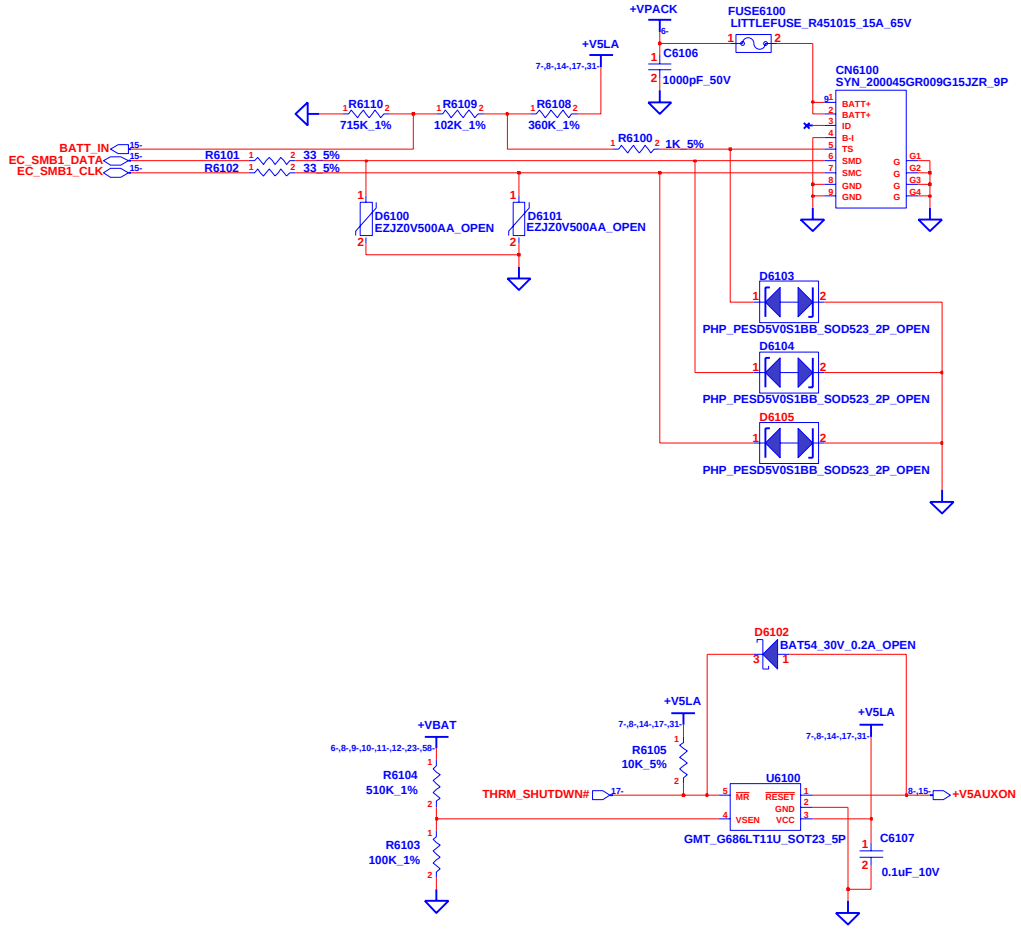

INVENTEC

TITLE **Berlin 10**
SELECT & BATTERY CONN

SIZE	CODE	DOC. NUMBER	REV
A3	CS	ES	AX1

SHEET 7 OF 61

CHANGE by Lin, Bob 25-Nov-2009

WWW.AliSaler.Com

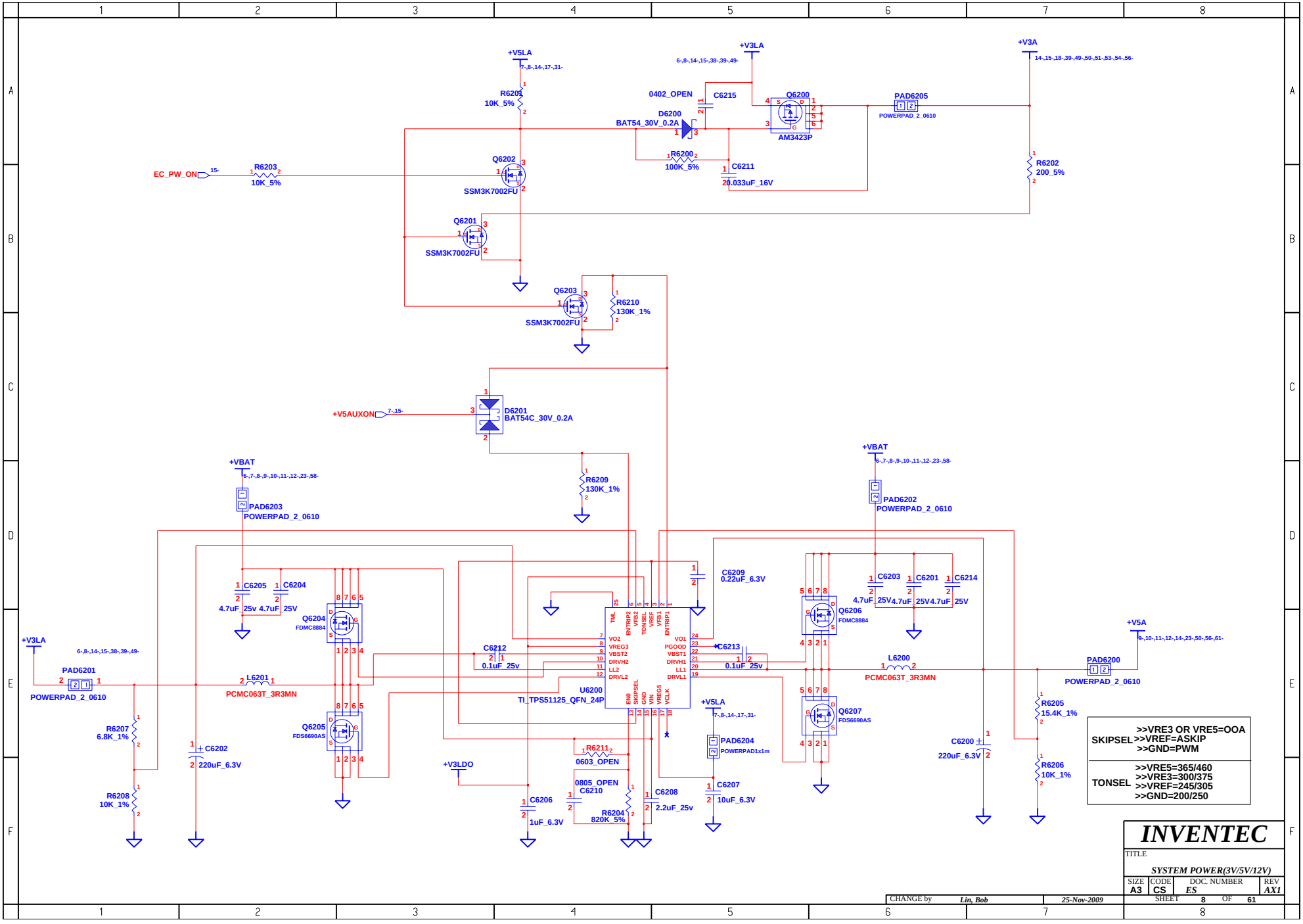

WWW.AliSaler.Com

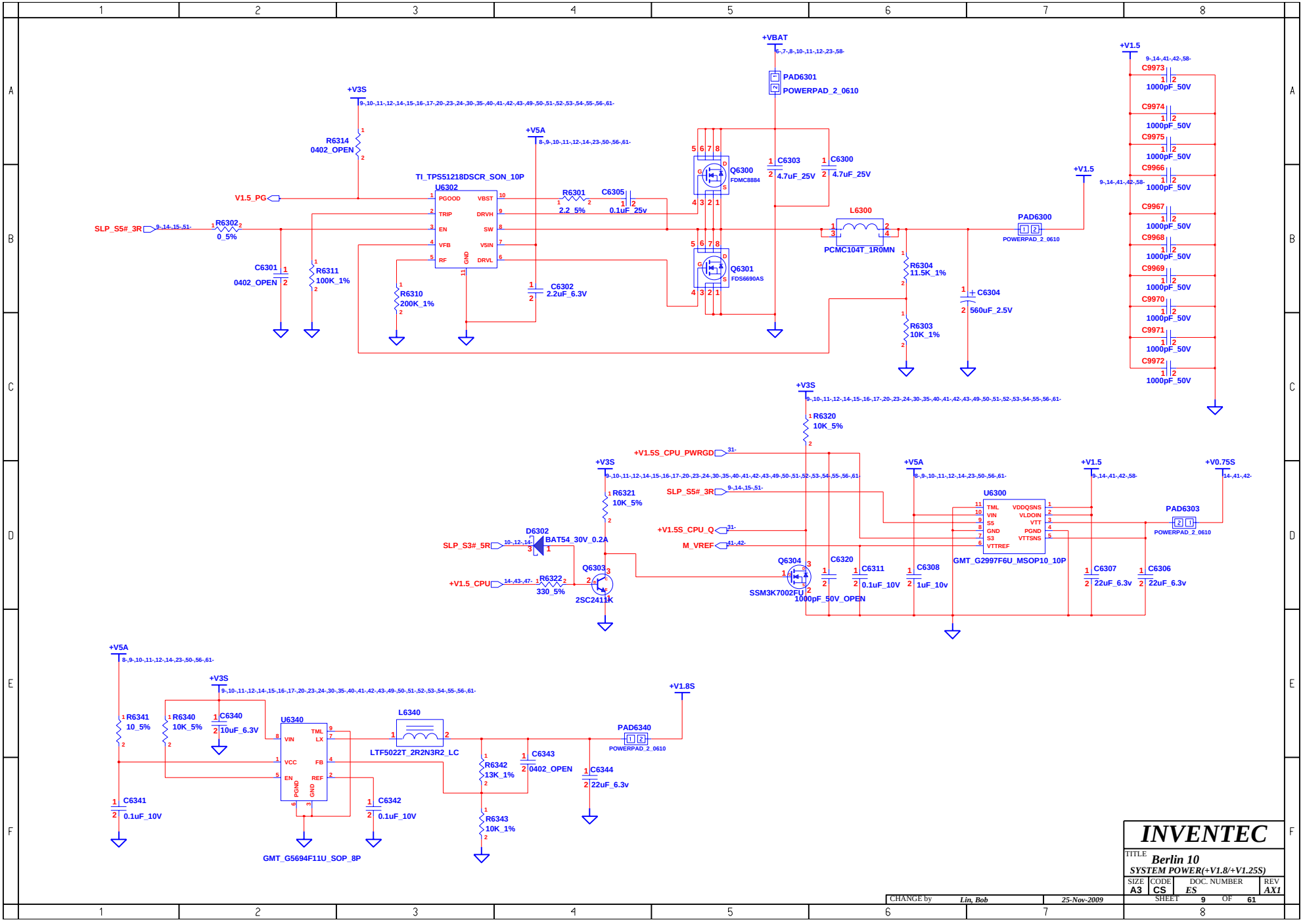

WWW.AliSaler.Com

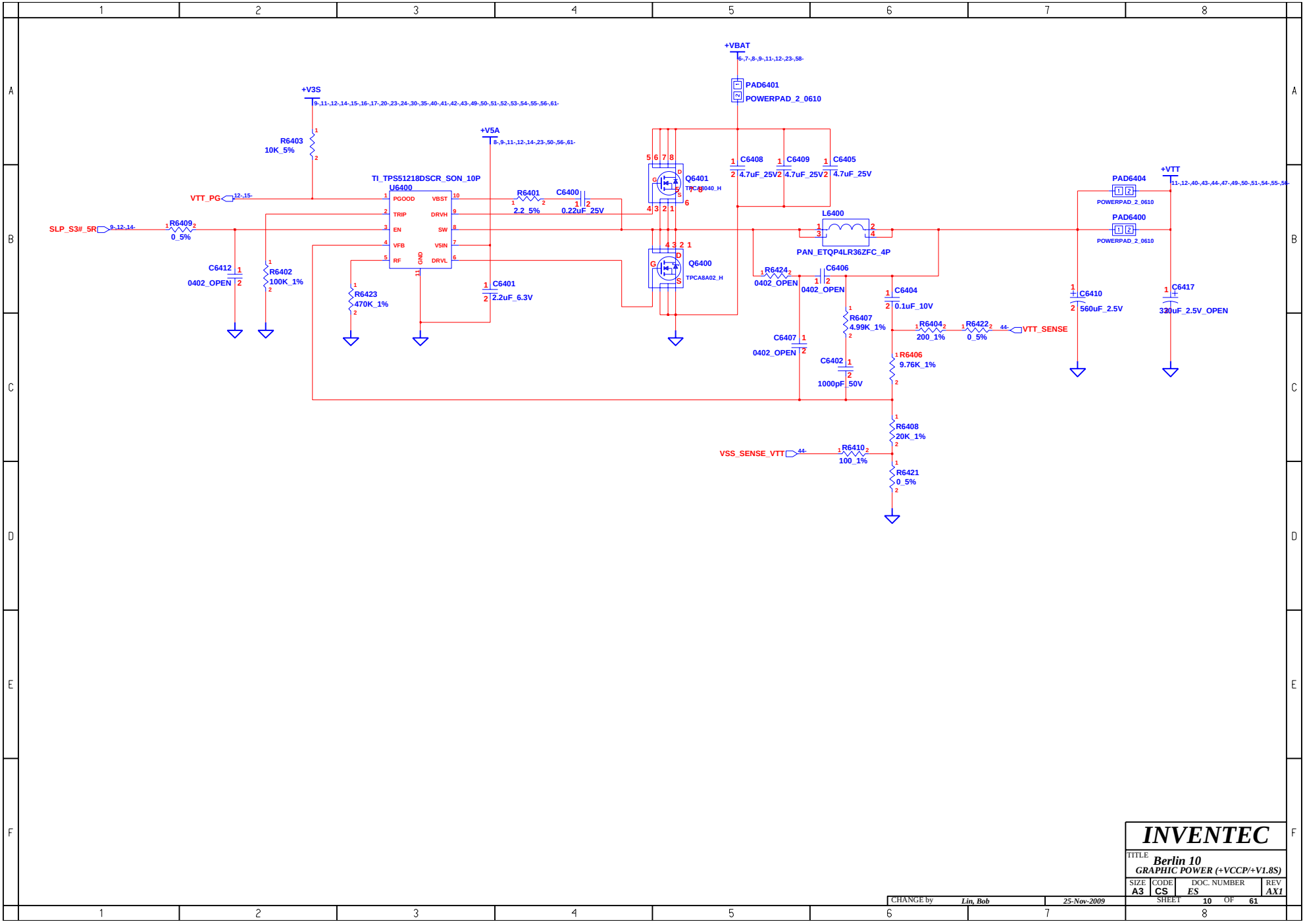

CHANGE by	Lin, Bob	25-Nov-2009	

INVENTEC

TITLE
Berlin 10
GRAPHIC POWER (+VCCP/+V1.8S)

SIZE	CODE	DOC. NUMBER	REV
A3	CS	ES	AX1

SHEET 10 OF 61

WWW.AliSaler.Com

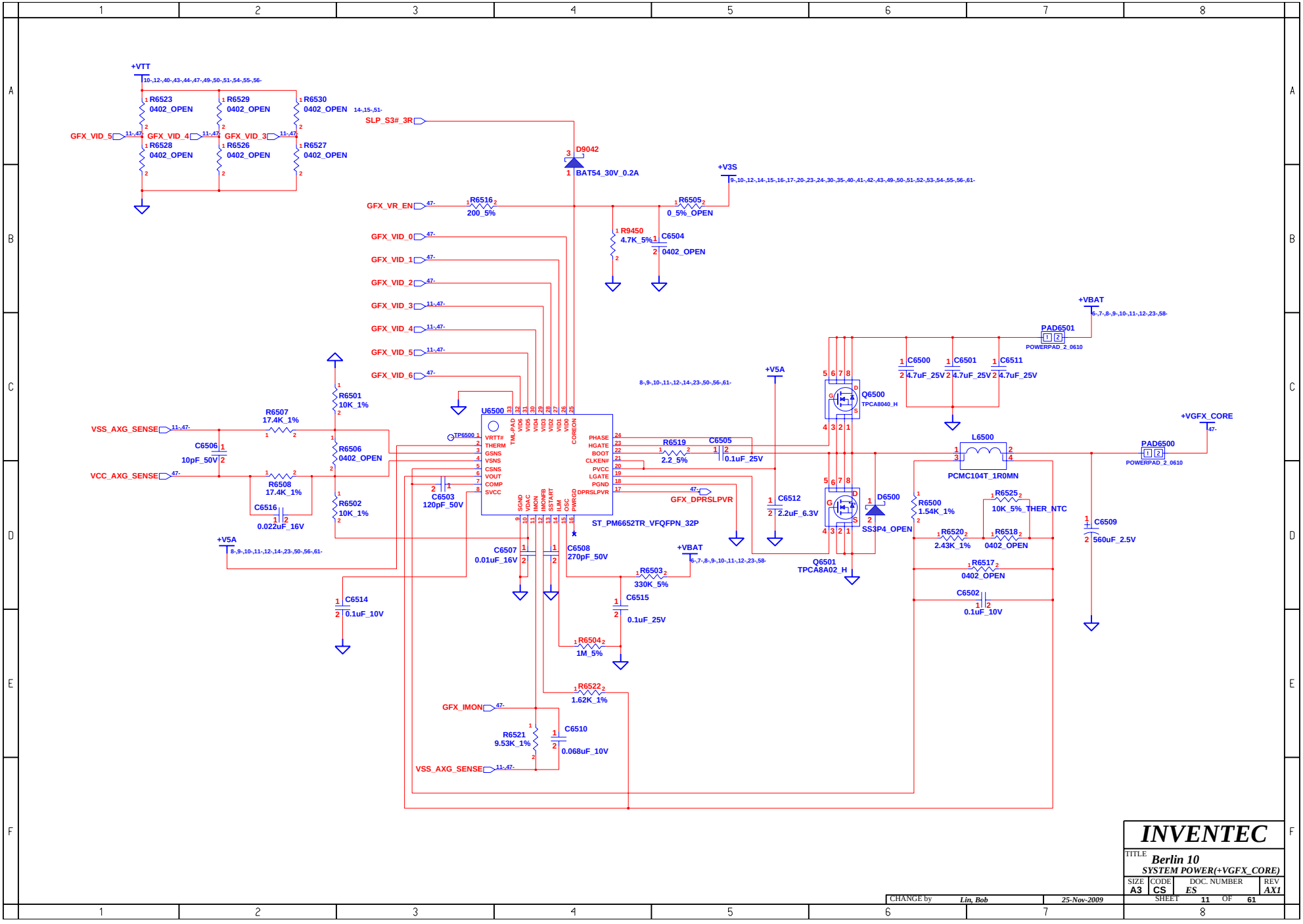

INVENTEC			
TITLE Berlin 10 SYSTEM POWER(+VGFX_CORE)			
SIZE A3	CODE CS	DOC. NUMBER ES	REV AX1
CHANGE by Lin, Bob	25-Nov-2009	SHEET 11 OF 61	

WWW.AliSaler.Com

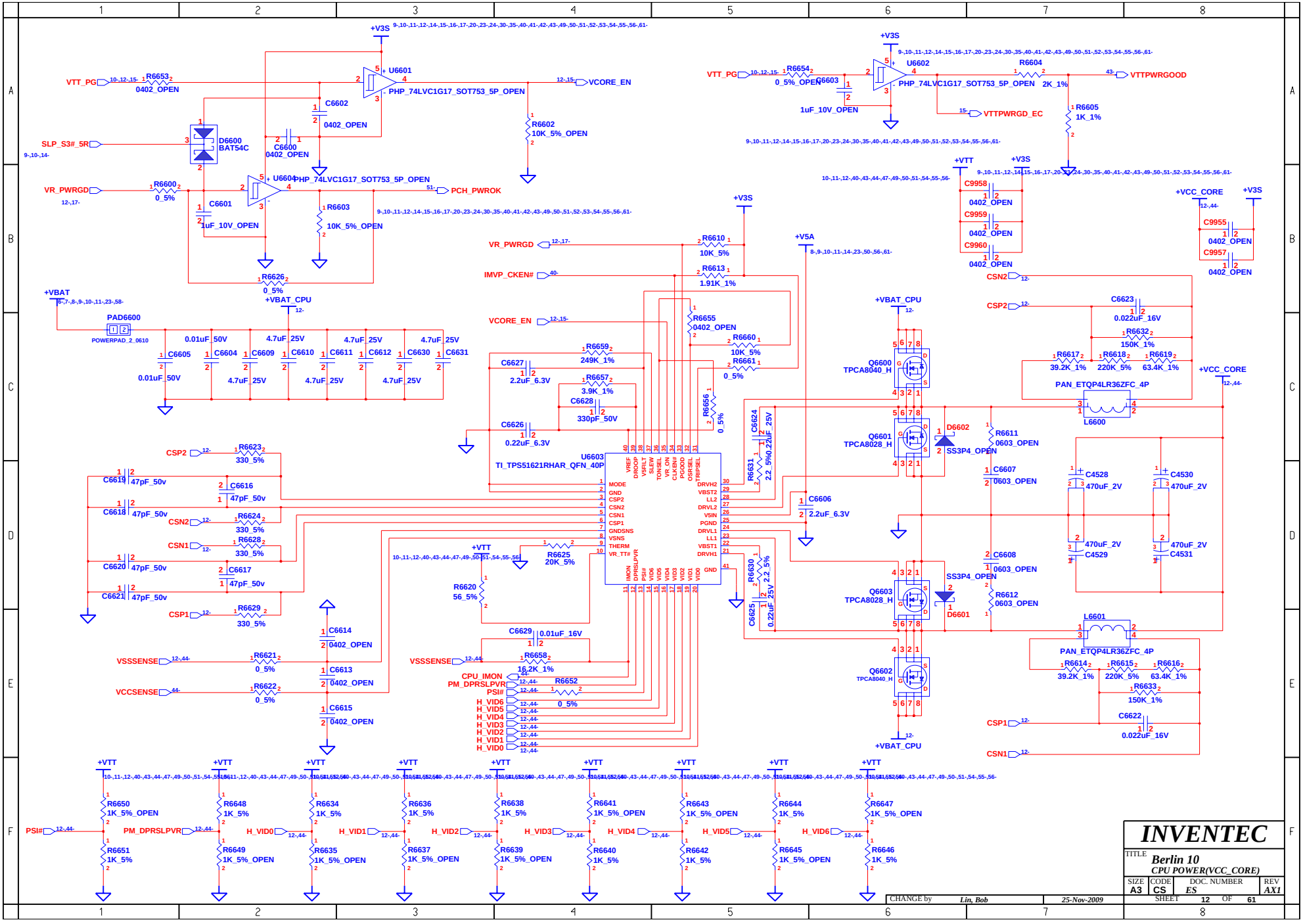
INVENTEC
TITLE
Berlin 10
CPU POWER(VCC_CORE)
SIZE A3
CODE CS
DOC. NUMBER ES
REV AX1
SHEET 12 OF 61
CHANGE by Lin, Bob
25-Nov-2009
U6601 PHP_74LVC1G17_SOT753_5P_OPEN
U6602 PHP_74LVC1G17_SOT753_5P_OPEN
U6604 PHP_74LVC1G17_SOT753_5P_OPEN
U6603 TI_TPS51621RHAR_QFN_40P
Q6600 TPCA8040_H
Q6601 TPCA8028_H
Q6603 TPCA8028_H
Q6602 TPCA8040_H
PAN_ETQP4LR36ZFC_4P
PAD6600 POWERPAD_2_0610
D6600 BAT54C
D6602 SS3P4_OPEN
D6601 SS3P4_OPEN
VTT_PG
SLP_S3#_5R
VR_PWRGD
VCORE_EN
PCH_PWROK
VTTPWRGOOD
VTTPWRGD_EC
IMVP_CKEN#
CSP2
CSN2
CSN1
CSP1
VSSSENSE
VCCSENSE
CPU_IMON
PM_DPRSLPVR
PSI#
H_VID6
H_VID5
H_VID4
H_VID3
H_VID2
H_VID1
H_VID0
+V3S
+VTT
+VBAT
+VBAT_CPU
+V5A
+VCC_CORE
WWW.AliSaler.Com

skip

INVENTEC			
TITLE	Berlin 10 VGA POWER		
SIZE A3	CODE CS	DOC. NUMBER ES	REV AX1
CHANGE by Lin, Bob	25-Nov-2009	SHEET 13 OF 61	

WWW.AliSaler.Com

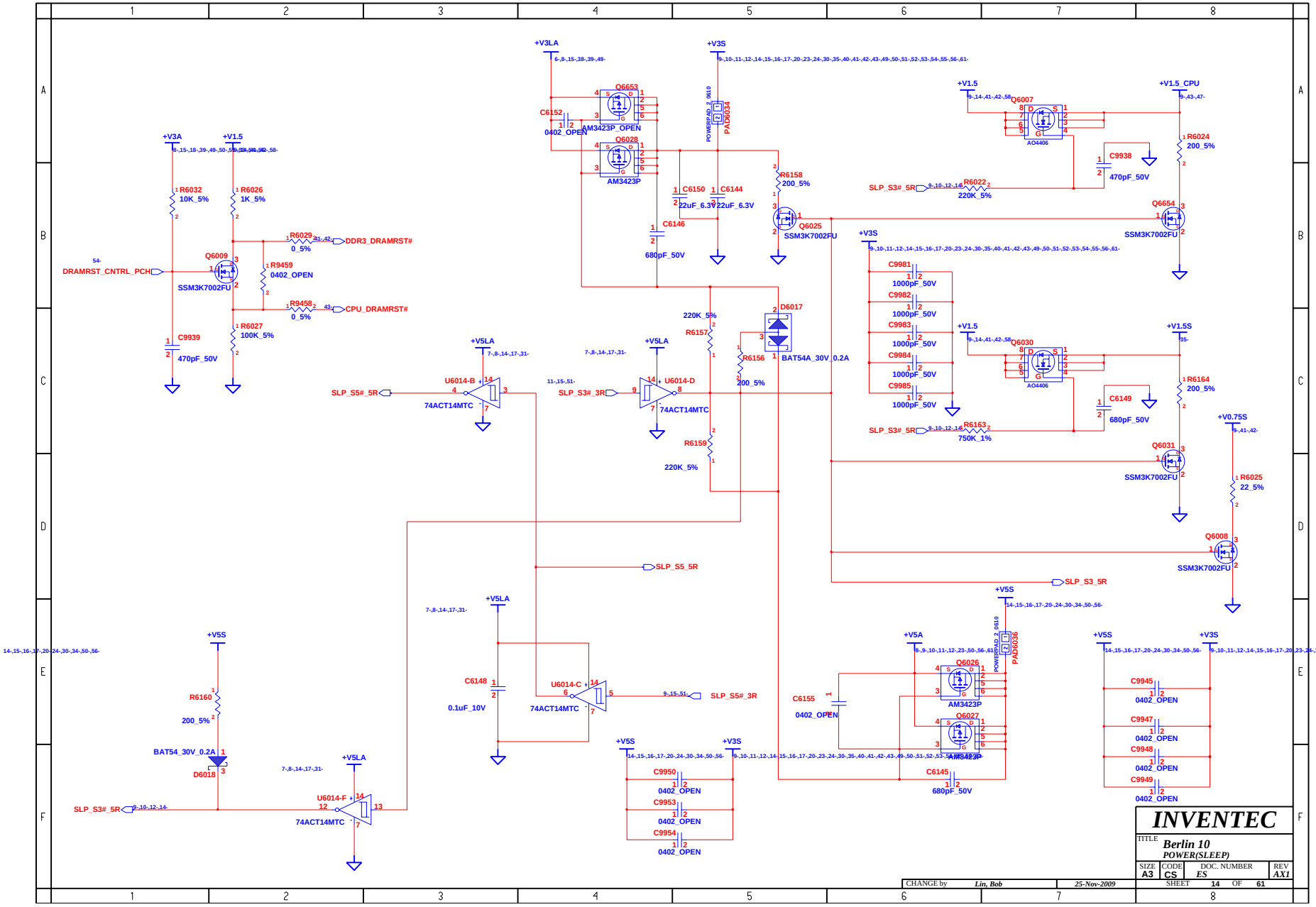

INVENTEC

TITLE Berlin 10
POWER(SLEEP)

SIZE	CODE	DOC. NUMBER	REV
A3	CS	ES	AX1

SHEET 14 OF 61

CHANGE by Lin, Bob 25-Nov-2009

WWW.AliSaler.Com

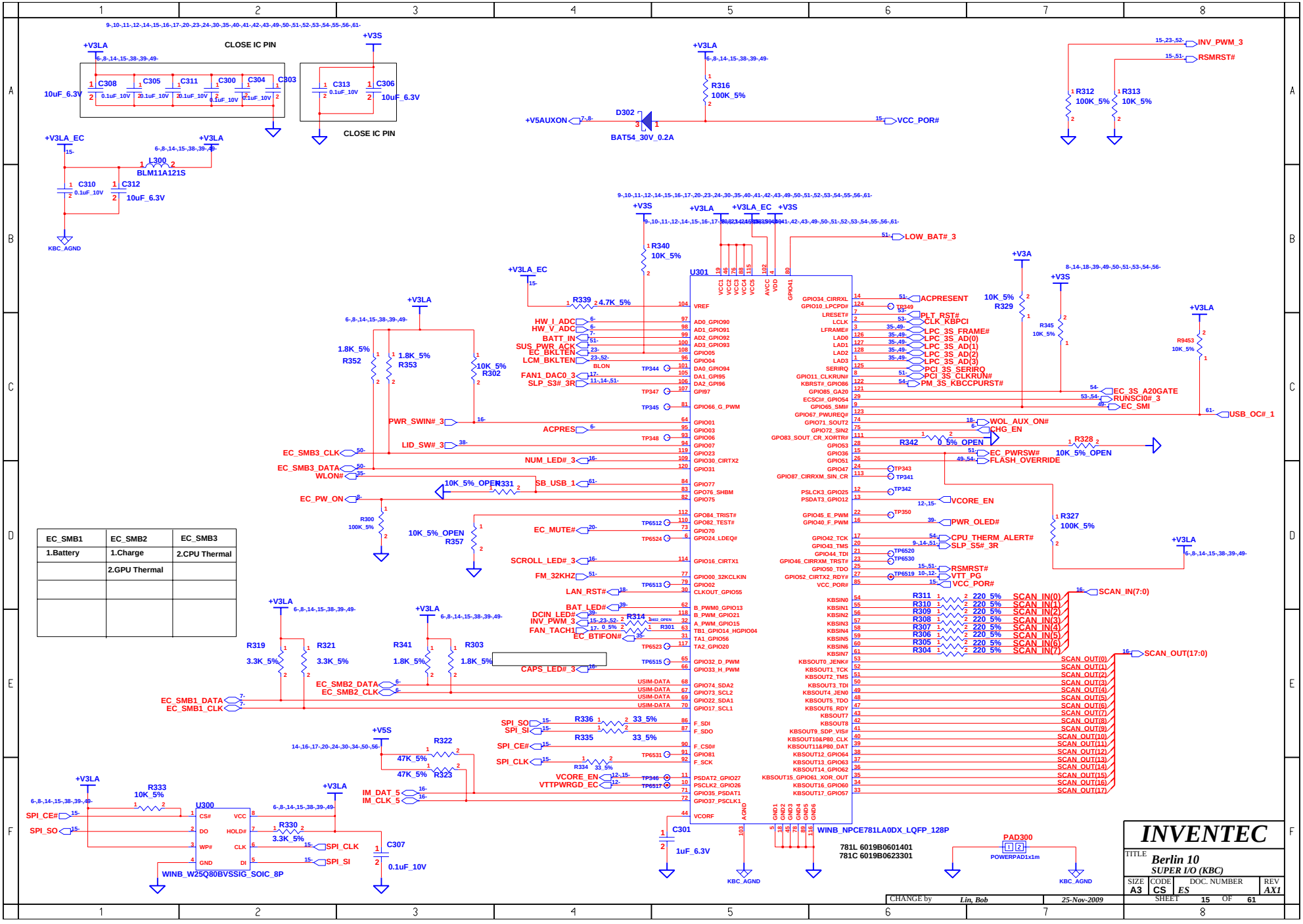

EC_SMB1	EC_SMB2	EC_SMB3
1.Battery	1.Charge	2.CPU Thermal
	2.GPU Thermal	

WWW.AliSaler.Com

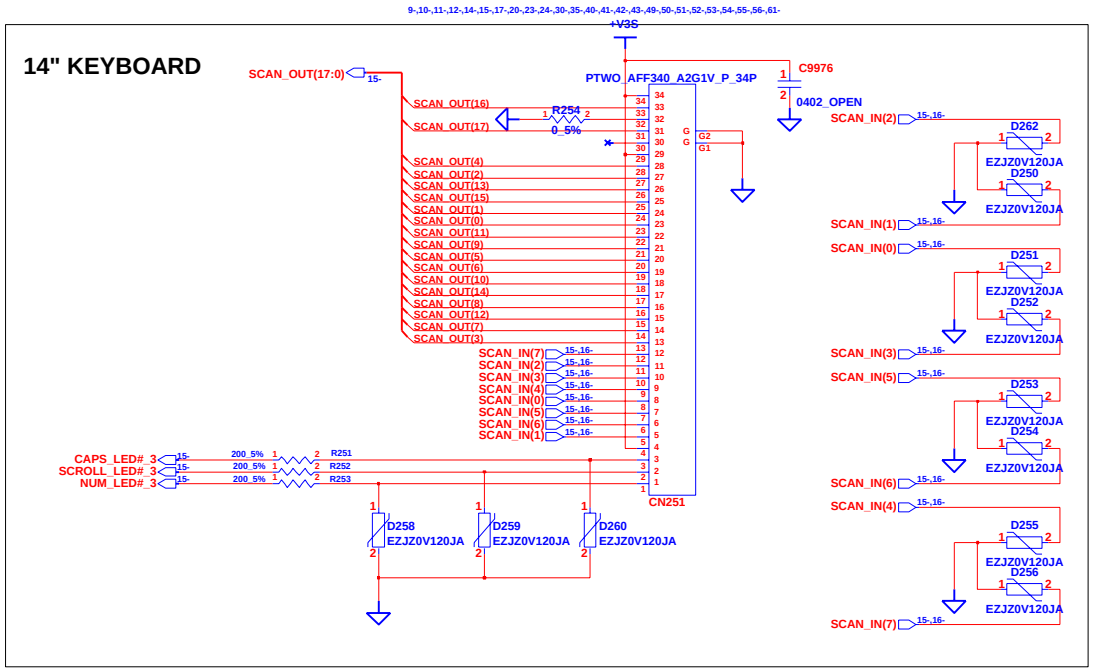

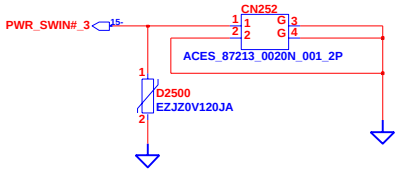

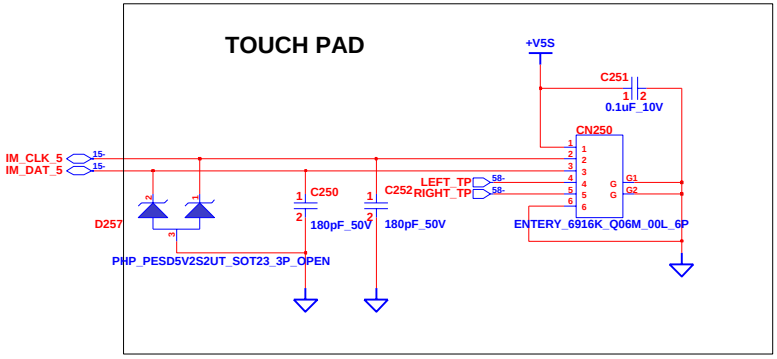

INVENTEC			
TITLE	Berlin 10 K/B & TP/B CONN		
SIZE A3	CODE CS	DOC. NUMBER ES	REV AX1
CHANGE by Lin, Bob	25-Nov-2009	SHEET 16 OF 61	

WWW.AliSaler.Com

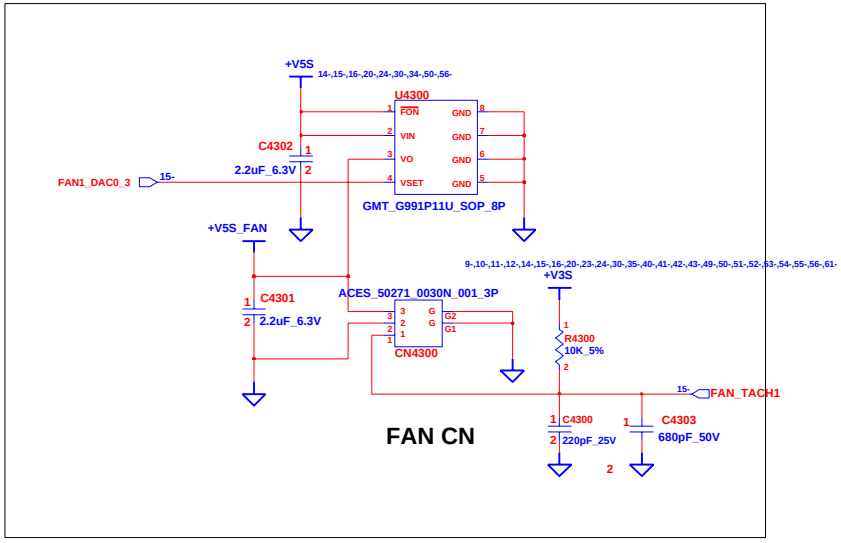

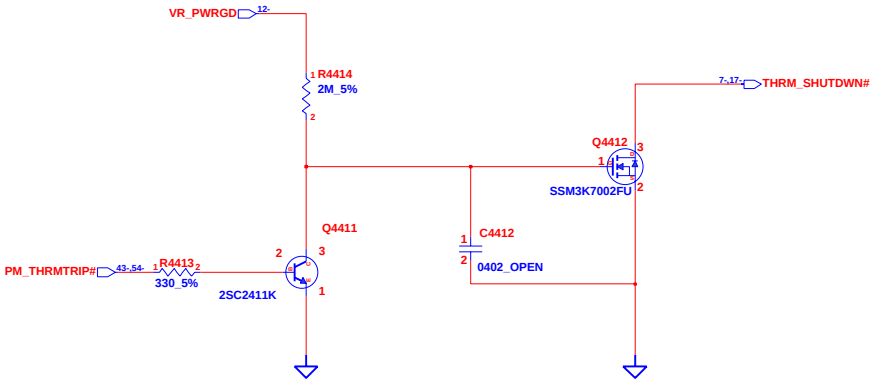

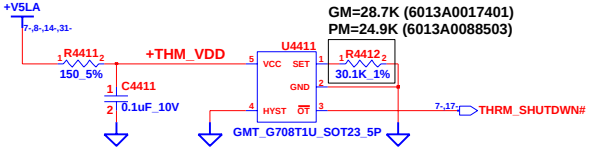

GM Thermal shoutdown at 80.8°C +/-3°C from 60°C to 100°C
PM Thermal shoutdown at 86°C +/-3°C from 60°C to 100°C
RSET=0.0012*T^2- 0.9308*T+96.147
Hysteresis is 30C

CHANGE by	Lin, Bob	25-Nov-2009	

INVENTEC

TITLE *Berlin 10*
FAN,Thermal controller

SIZE	CODE	DOC. NUMBER	REV
A3	CS	ES	AX1

SHEET 17 OF 61

WWW.AliSaler.Com

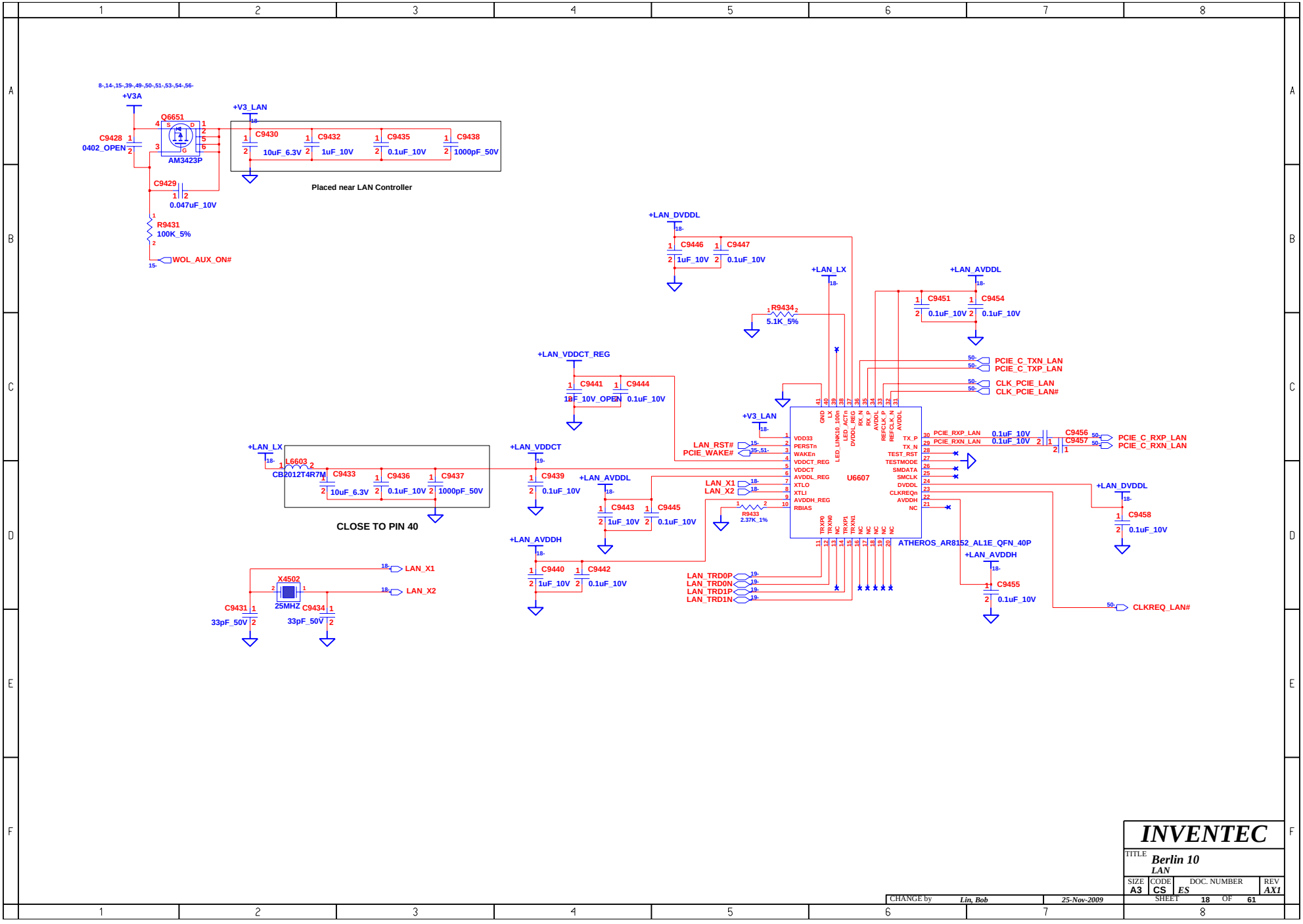

WWW.AliSaler.Com

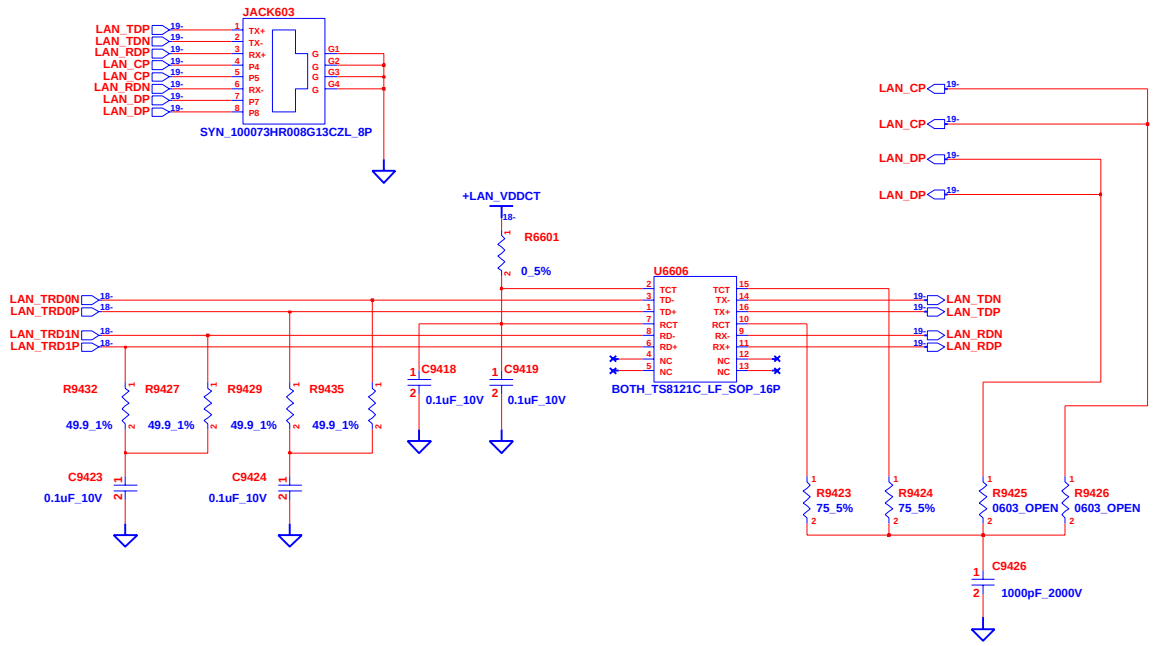

CHANGE by	Lin, Bob	25-Nov-2009	

INVENTEC

TITLE **Berlin 10**
RJ45 & TRANSFORMER

SIZE	CODE	DOC. NUMBER	REV
A3	CS	ES	AX1

SHEET 19 OF 61

WWW.AliSaler.Com

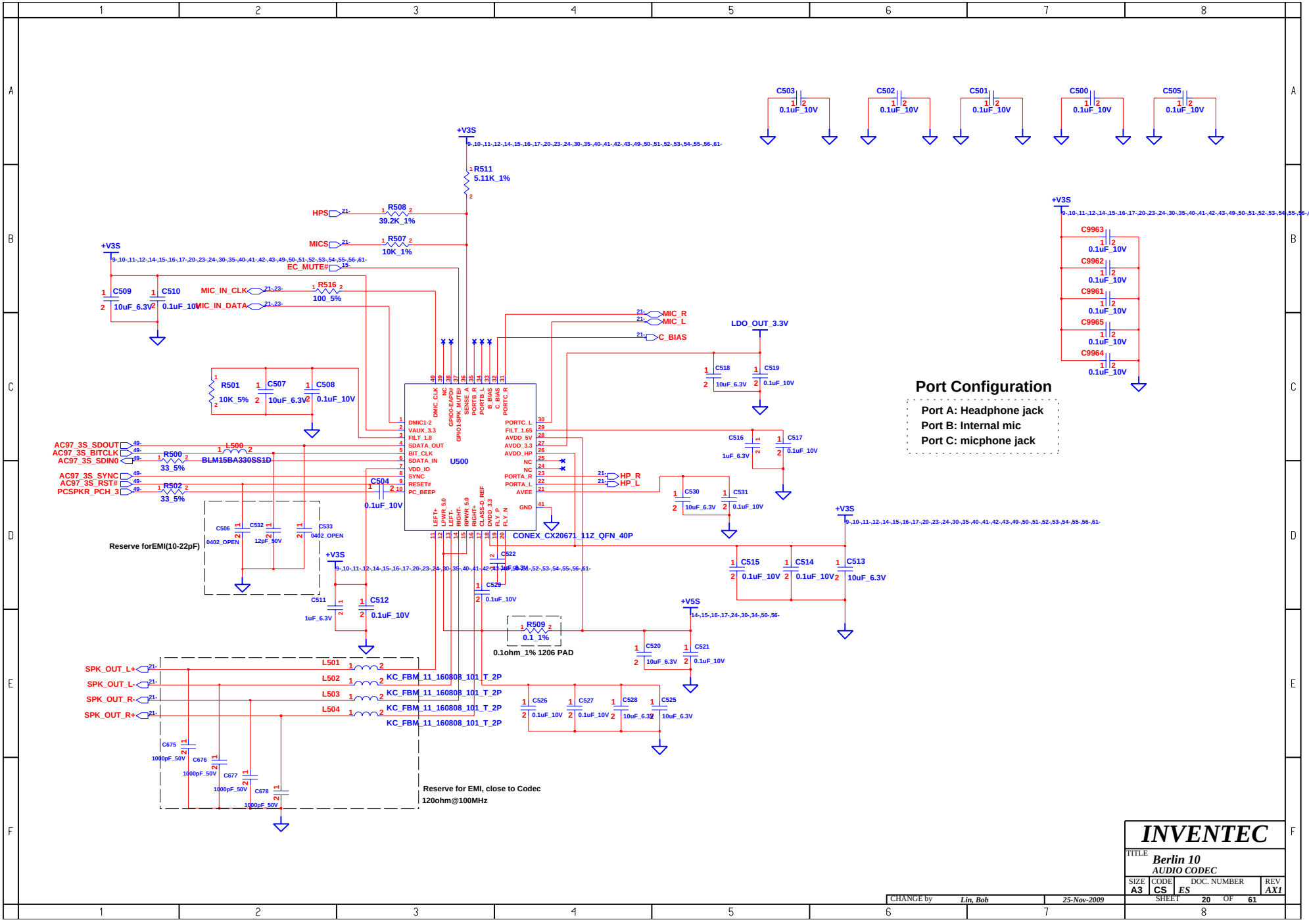

WWW.AliSaler.Com

INTERNAL SPEAKERS

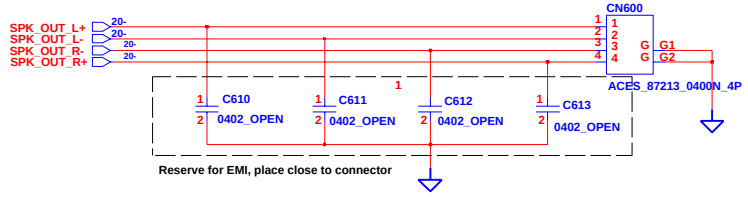

AUDIO JACKS

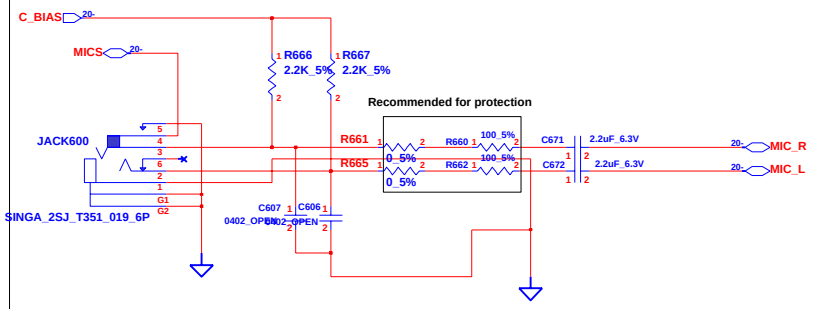

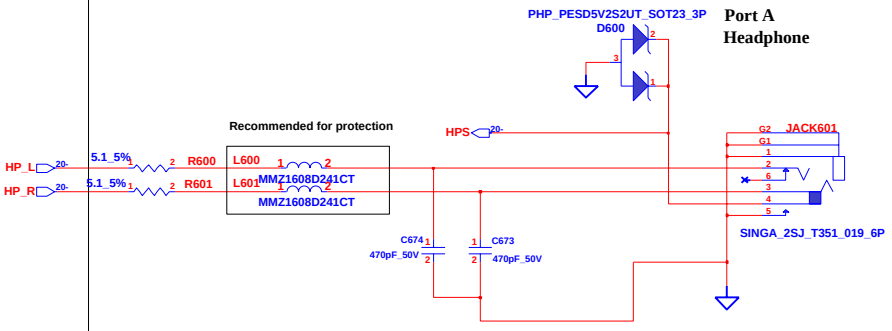

INTERNAL MIC

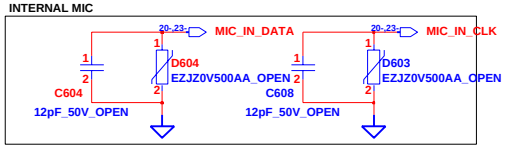

INVENTEC			
TITLE	Berlin 10 AUDIO AMP&MIC&SPEAKER		
SIZE A3	CODE CS	DOC. NUMBER ES	REV AX1
CHANGE by Lin, Bob	25-Nov-2009	SHEET 21 OF 61	

WWW.AliSaler.Com

1	2	3	4	5	6	7	8

INVENTEC

TITLE **Berlin 10**
MDC

SIZE	CODE	DOC. NUMBER	REV
A3	CS	ES	AX1

CHANGE by *Lin, Bob* *4-Jan-2010*

SHEET 22 OF 61

WWW.AliSaler.Com

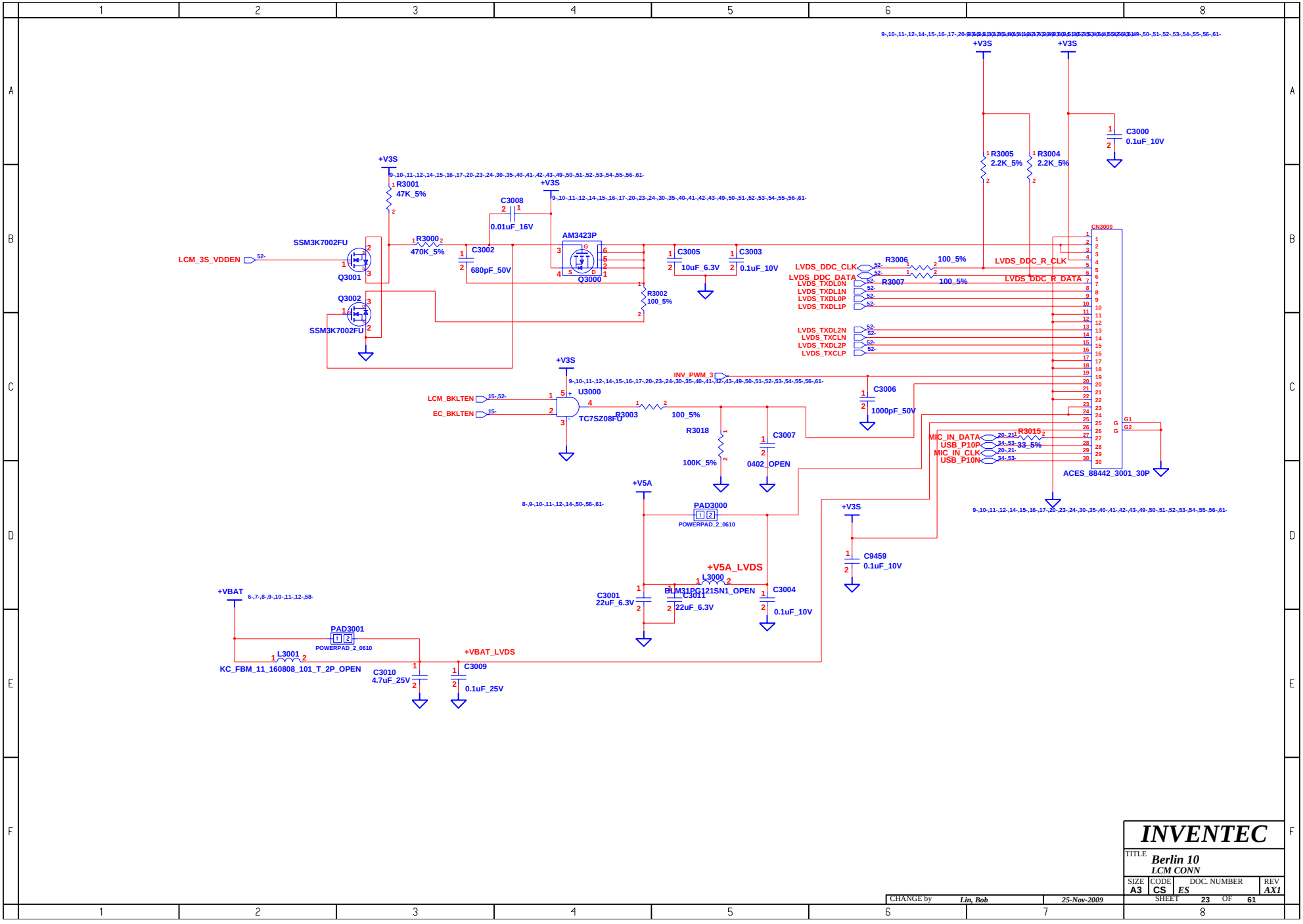

WWW.AliSaler.Com

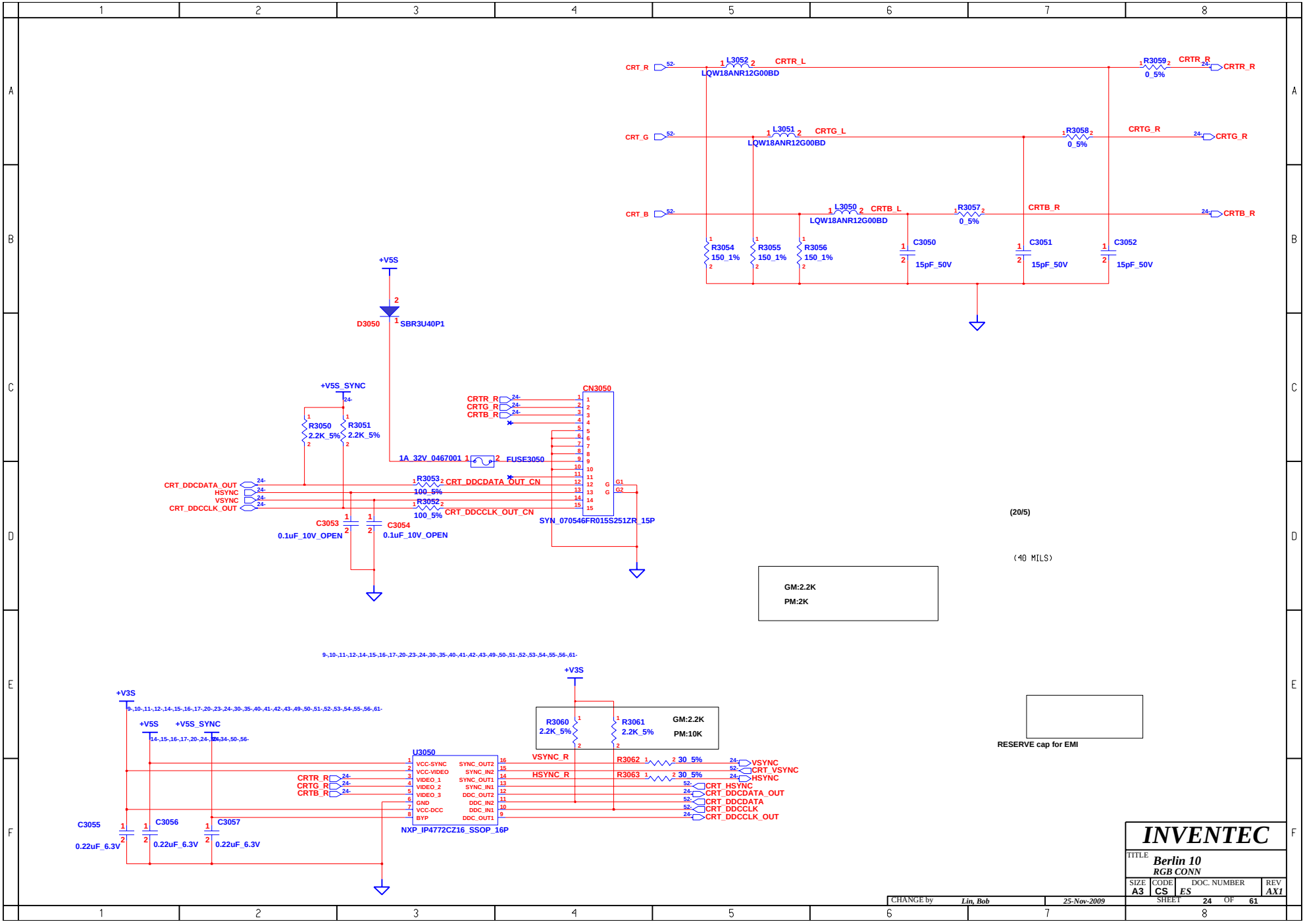

WWW.AliSaler.Com

INVENTEC	
TITLE	Berlin 10 CEC
SIZE A3	CODE CS
DOC. NUMBER	ES
REV	AX1
CHANGE by	Lin, Bob
	25-Nov-2009
SHEET	25 OF 61

WWW.AliSaler.Com

1	2	3	4	5	6	7	8

INVENTEC

TITLE **Berlin 10**
HDMI Level Shifter

SIZE	CODE	DOC. NUMBER	REV
A3	CS	ES	AX1

CHANGE by *Lin, Bob* *4-Jan-2010*

SHEET 26 OF 61

WWW.AliSaler.Com

1	2	3	4	5	6	7	8

A B C D E F

INVENTEC

TITLE **Berlin 10**
HDMI CONN

SIZE	CODE	DOC. NUMBER	REV
A3	CS	ES	AX1

CHANGE by *Lin, Bob* *4-Jan-2010*

SHEET 27 OF 61

WWW.AliSaler.Com

1	2	3	4	5	6	7	8

INVENTEC

TITLE **Berlin 10**
EXPRESS CARD

SIZE	CODE	DOC. NUMBER	REV
A3	CS	ES	AX1

CHANGE by *Lin, Bob* *4-Jan-2010*

SHEET 28 OF 61

WWW.AliSaler.Com

INVENTEC	
TITLE	Berlin 10 Cardreader
SIZE A3	CODE CS
DOC. NUMBER	ES
REV	AX1
CHANGE by	Lin, Bob
	4-Jan-2010
SHEET	29 OF 61

WWW.AliSaler.Com

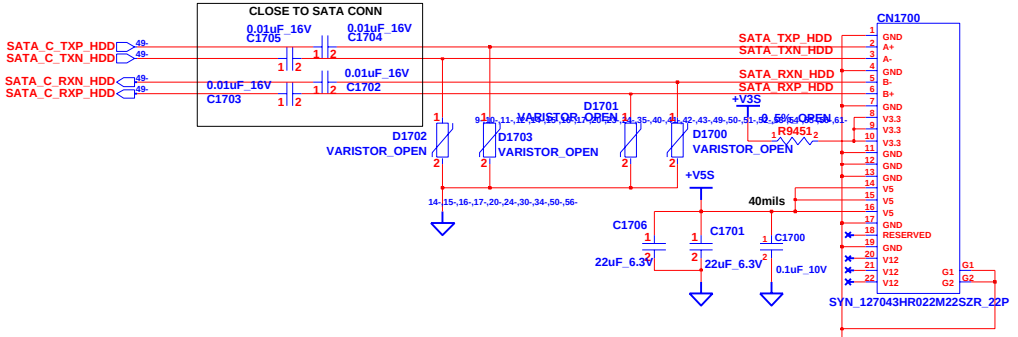

SATA HDD01

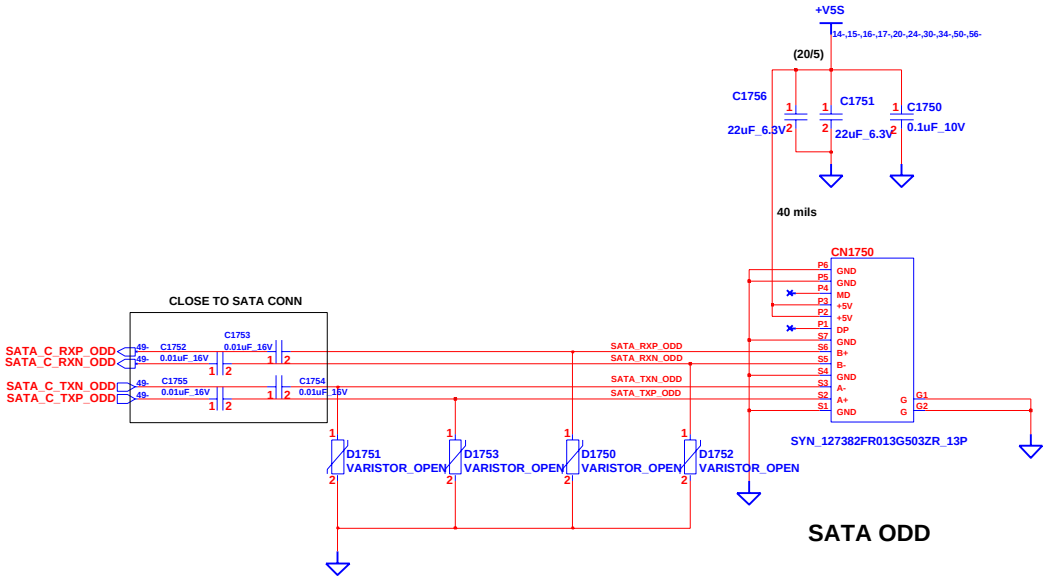

SATA ODD

CHANGE by	Lin, Bob	25-Nov-2009	

INVENTEC

TITLE: *Berlin 10*
SATA HDD & ODD

SIZE	CODE	DOC. NUMBER	REV
A3	CS	ES	AX1

SHEET 30 OF 61

WWW.AliSaler.Com

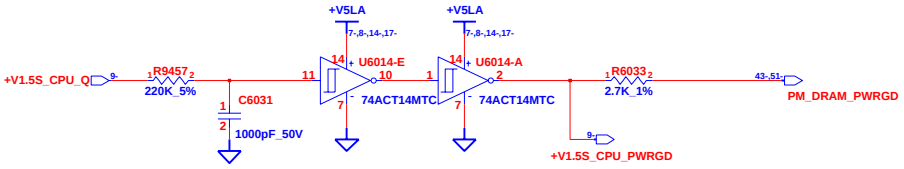

CHANGE by	Lin, Bob	25-Nov-2009	

INVENTEC

TITLE **Berlin 10**
E-SATA

SIZE	CODE	DOC. NUMBER	REV
A3	CS	ES	AX1

SHEET 31 OF 61

WWW.AliSaler.Com

1	2	3	4	5	6	7	8

INVENTEC

TITLE **Berlin 10**
USB CONN

SIZE	CODE	DOC. NUMBER	REV
A3	CS	ES	AX1

CHANGE by *Lin, Bob* *4-Jan-2010*

SHEET 32 OF 61

WWW.AliSaler.Com

1	2	3	4	5	6	7	8

INVENTEC

TITLE **Berlin 10**
Bluetooth

SIZE	CODE	DOC. NUMBER	REV
A3	CS	ES	AX1

CHANGE by *Lin, Bob* *4-Jan-2010*

SHEET 33 OF 61

WWW.AliSaler.Com

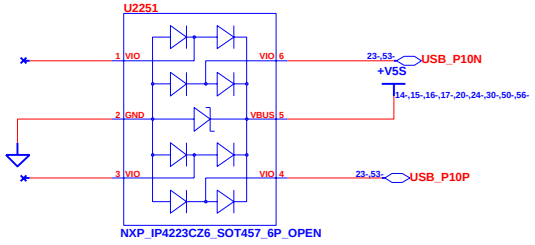

CHANGE by	*Lin, Bob*	*4-Jan-2010*	

INVENTEC

TITLE *Berlin 10*
Camera

SIZE	CODE	DOC. NUMBER	REV
A3	CS	*ES*	*AX1*

SHEET 34 OF 61

WWW.AliSaler.Com

Wireless & Debug card

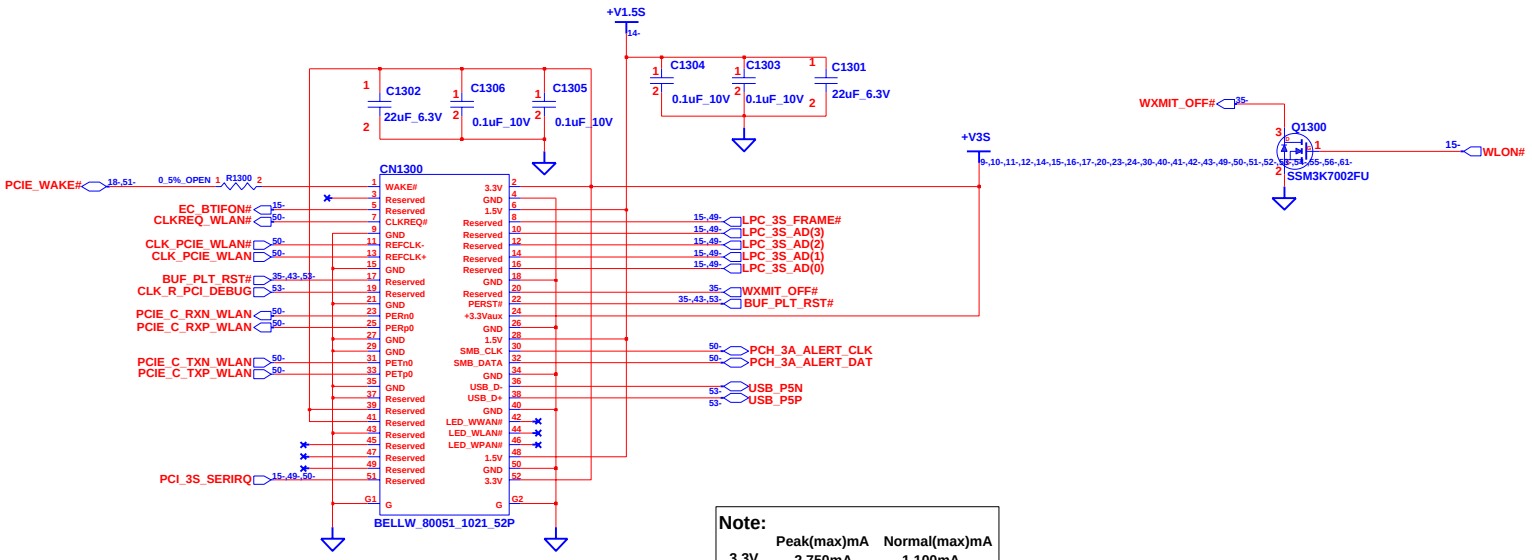

Note:

	Peak(max)mA	Normal(max)mA
3.3V	2,750mA	1,100mA
1.5V	500mA	375mA

MINI CARD 1

CHANGE by	Lin, Bob	25-Nov-2009	

INVENTEC

TITLE *Berlin 10 WLAN*

SIZE	CODE	DOC. NUMBER	REV
A3	CS	ES	AX1

SHEET 35 OF 61

WWW.AliSaler.Com

INVENTEC	
TITLE	Berlin 10 3D sensor
SIZE A3	CODE CS
DOC. NUMBER	ES
REV	AX1
CHANGE by	Lin, Bob
	4-Jan-2010
SHEET	36 OF 61

WWW.AliSaler.Com

1	2	3	4	5	6	7	8

INVENTEC

TITLE **Berlin 10**
KILL SW

SIZE	CODE	DOC. NUMBER	REV
A3	CS	ES	AX1

CHANGE by *Lin, Bob* *4-Jan-2010*

SHEET 37 OF 61

WWW.AliSaler.Com

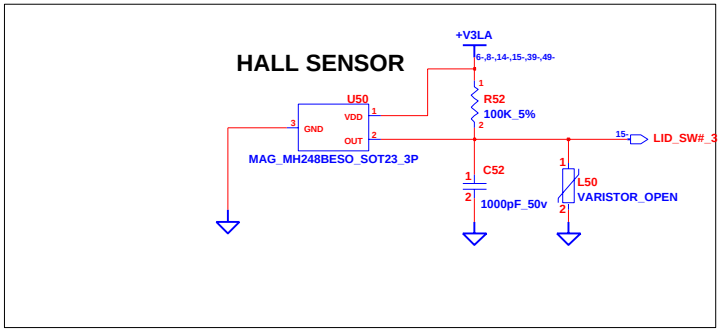

CHANGE by	Lin, Bob	25-Nov-2009	

INVENTEC

TITLE **Berlin 10**
LID SW

SIZE	CODE	DOC. NUMBER	REV
A3	CS	ES	AX1

SHEET 38 OF 61

WWW.AliSaler.Com

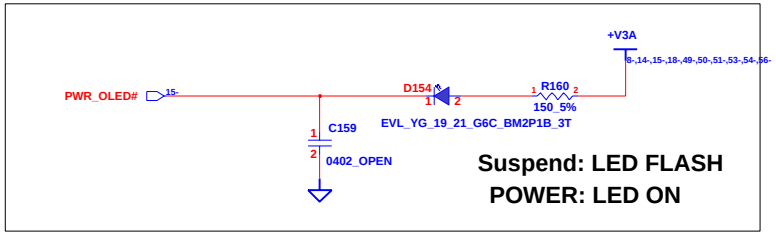

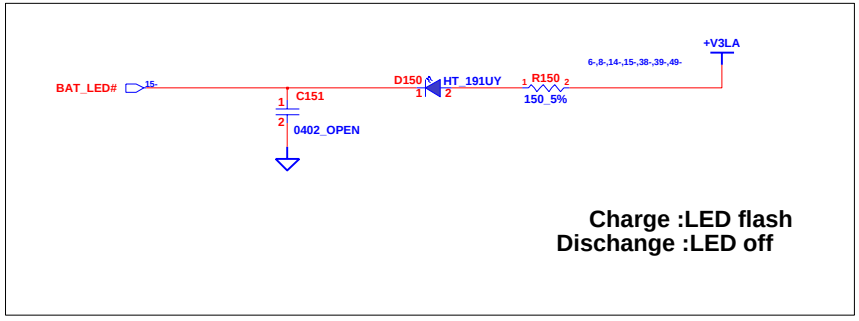

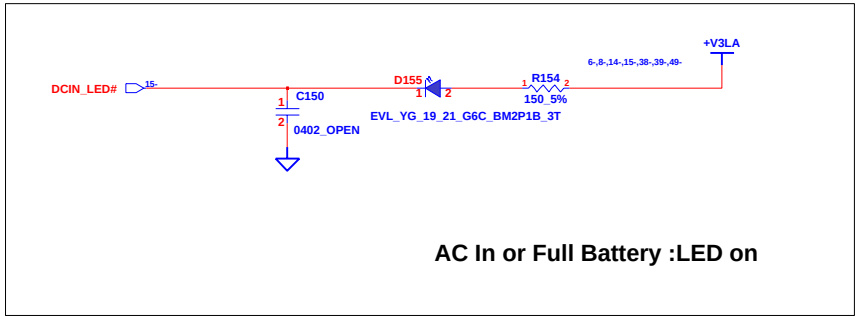

CHANGE by	Lin, Bob	25-Nov-2009	

INVENTEC

TITLE *Berlin 10*
LED

SIZE	CODE	DOC. NUMBER	REV
A3	CS	ES	AX1

SHEET 39 OF 61

WWW.AliSaler.Com

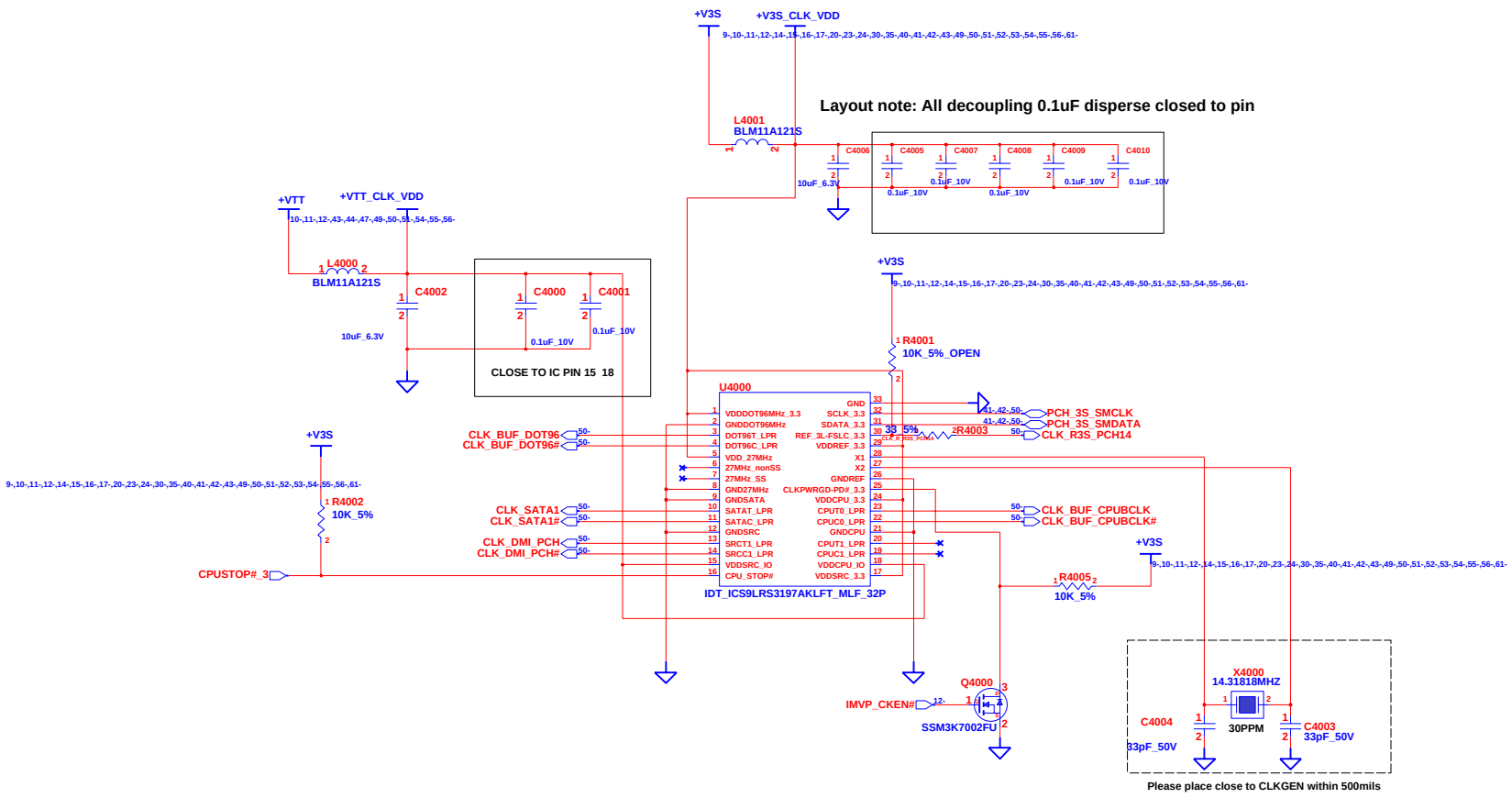

INVENTEC			
TITLE Berlin 10 CLOCK GENERATOR			
SIZE A3	CODE CS	DOC. NUMBER ES	REV AX1
CHANGE by Lin, Bob	25-Nov-2009	SHEET 40 OF 61	

WWW.AliSaler.Com

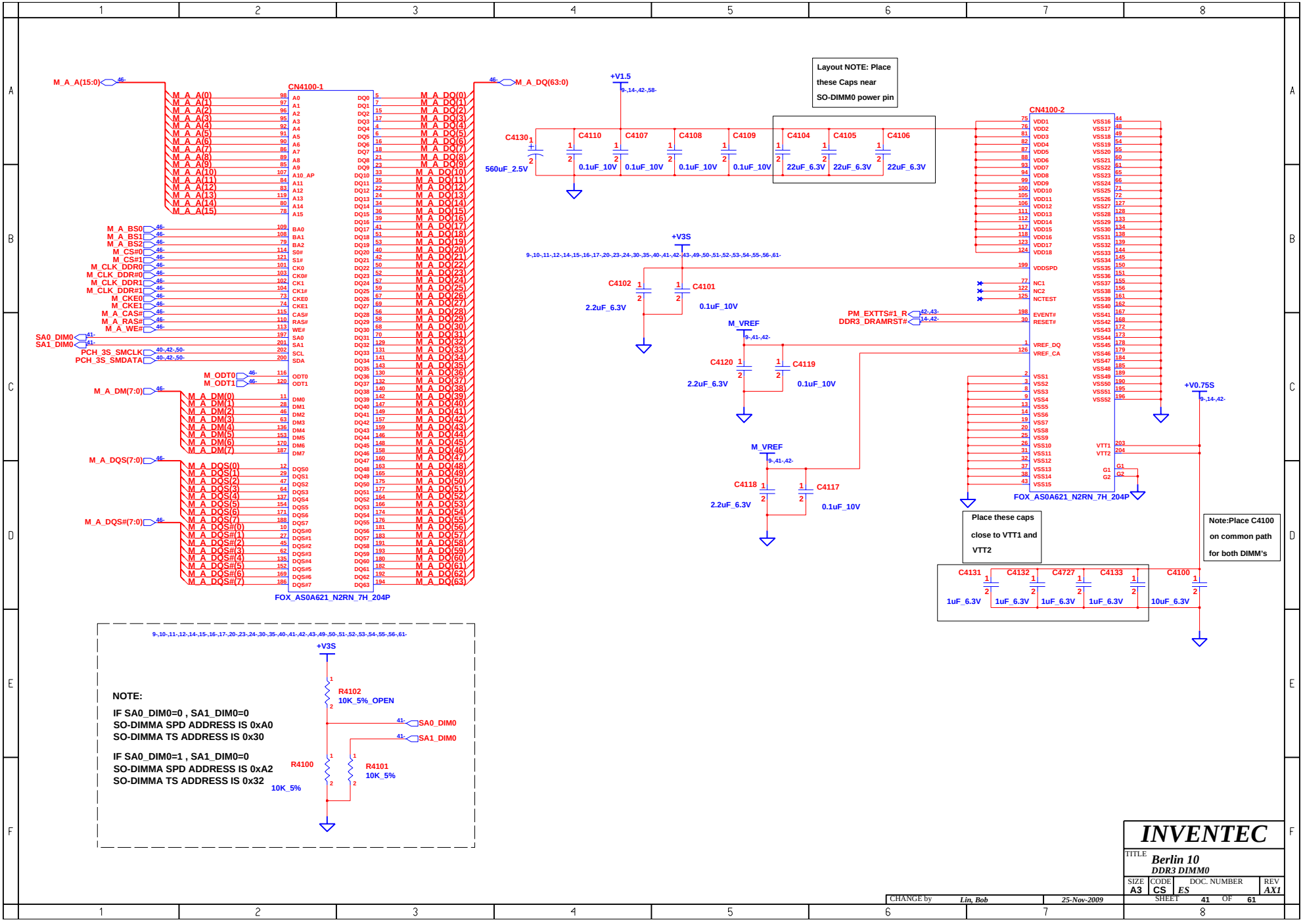

WWW.AliSaler.Com

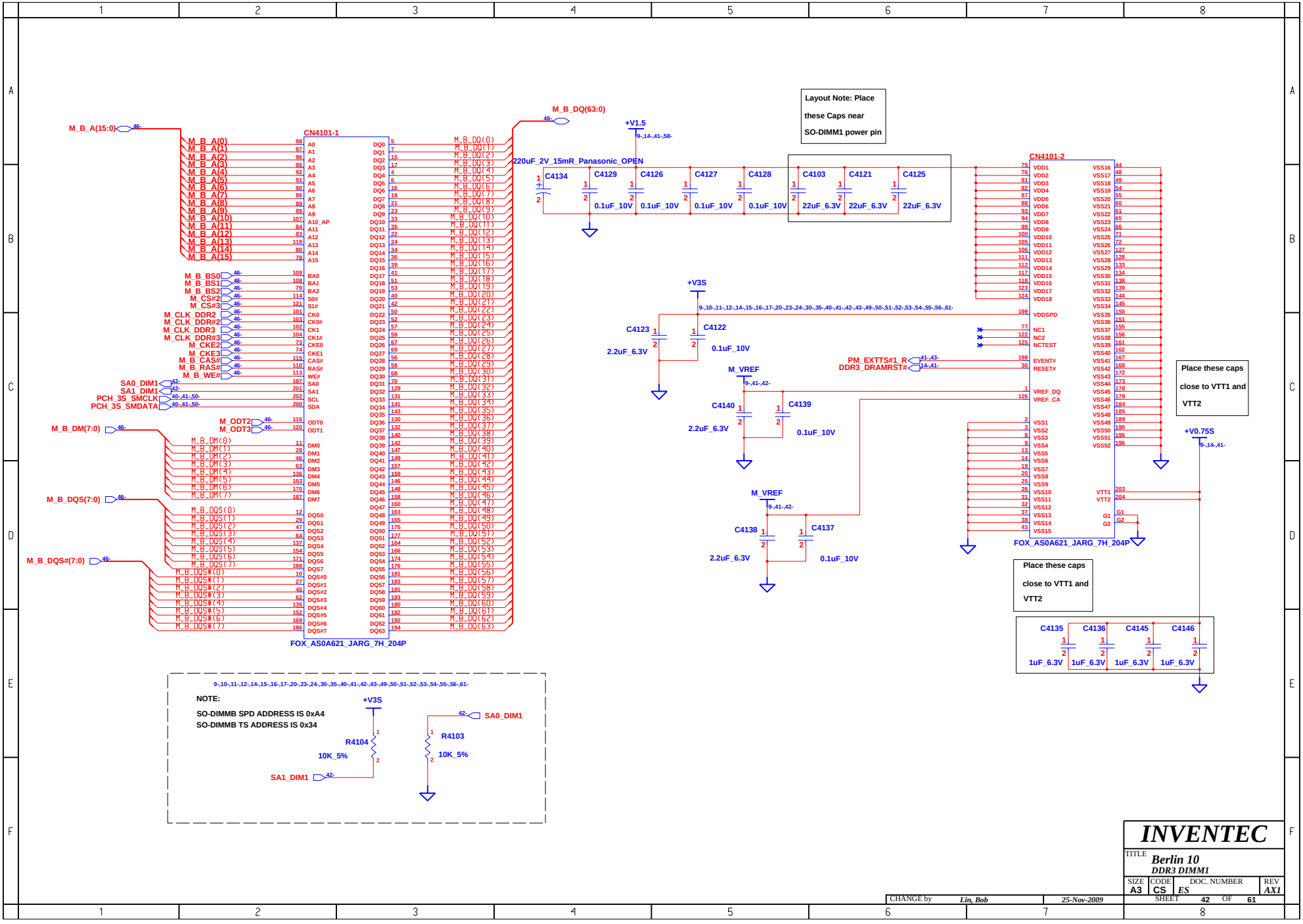

WWW.AliSaler.Com

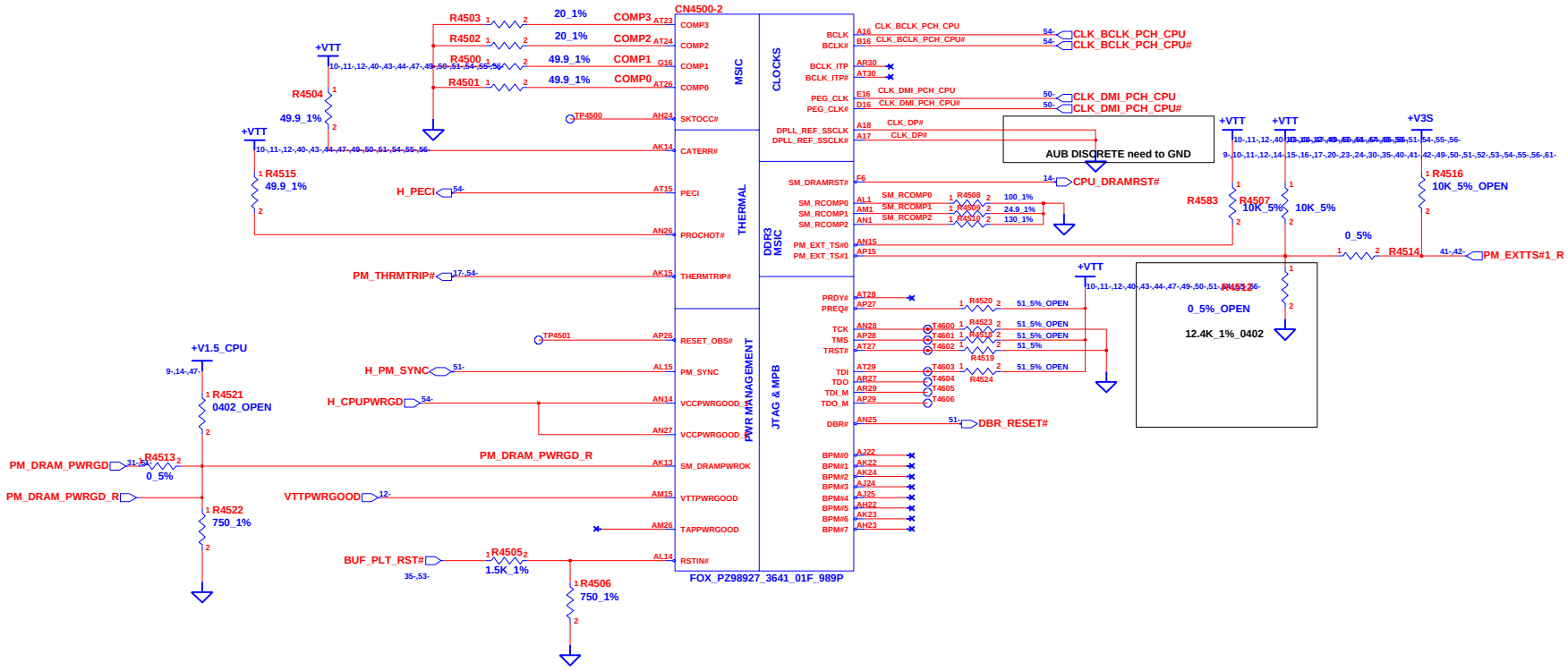

INVENTEC			
TITLE Berlin 10 CPU 1			
SIZE A3	CODE CS	DOC. NUMBER ES	REV AX1
CHANGE by Lin, Bob	25-Nov-2009	SHEET 43 OF 61	

WWW.AliSaler.Com

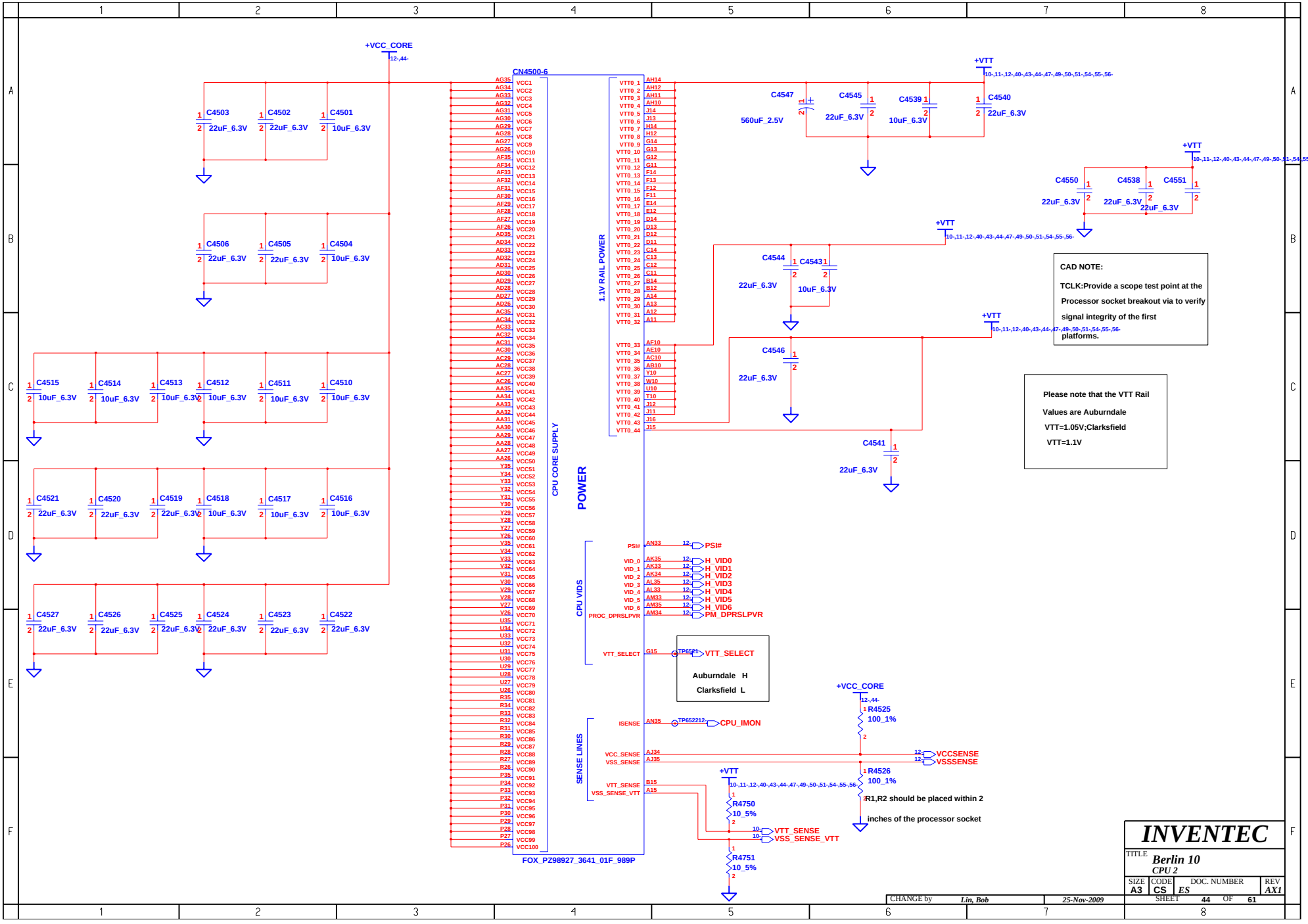

WWW.AliSaler.Com

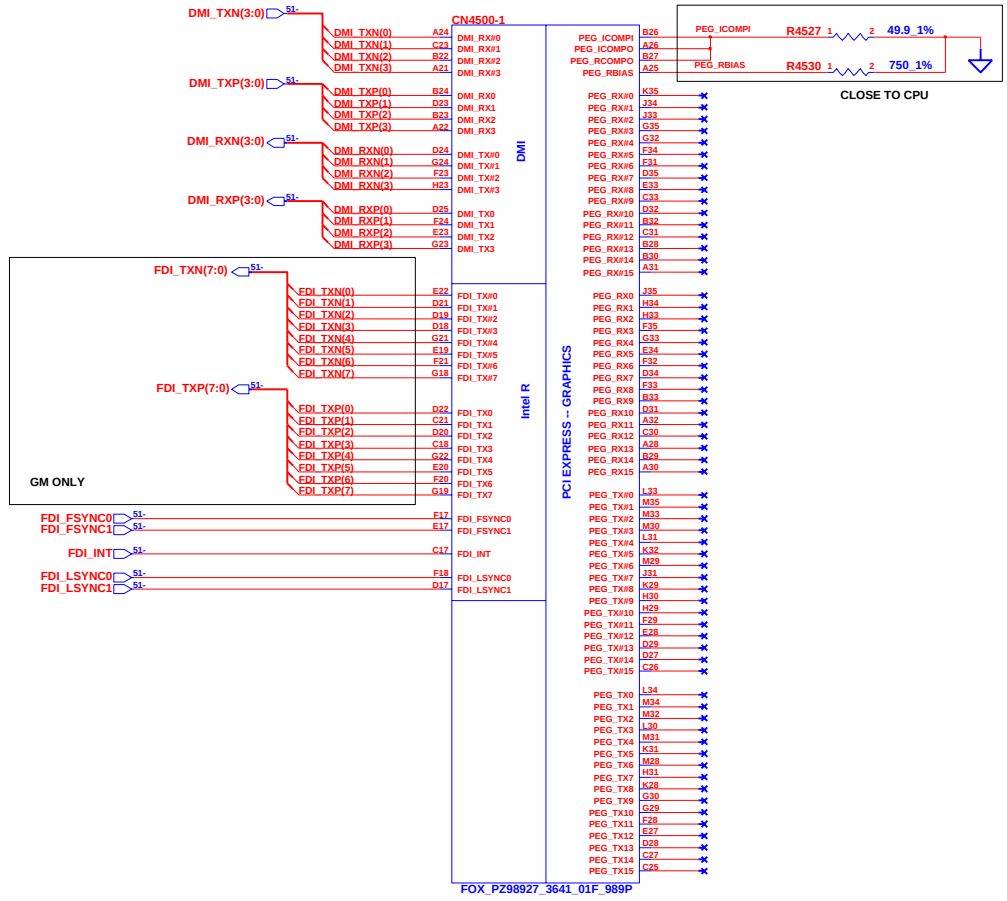

INVENTEC			
TITLE Berlin 10 CPU 3			
SIZE A3	CODE CS	DOC. NUMBER ES	REV AX1
CHANGE by Lin, Bob	25-Nov-2009	SHEET 45 OF 61	

WWW.AliSaler.Com

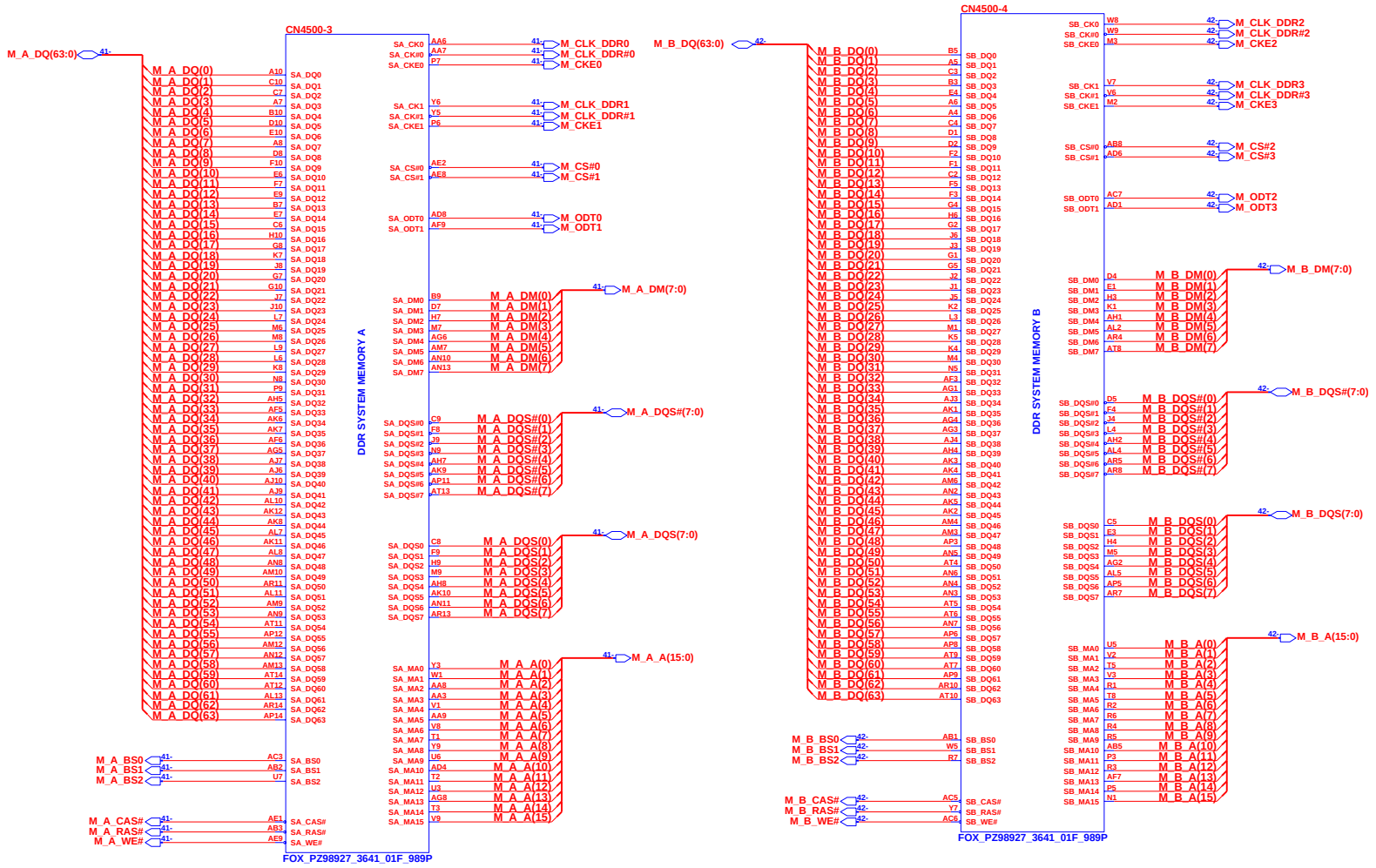

INVENTEC

TITLE **Berlin 10**
CPU 4

SIZE	CODE	DOC. NUMBER	REV
A3	CS	ES	AX1

CHANGE by *Lin, Bob* *25-Nov-2009*

SHEET 46 OF 61

WWW.AliSaler.Com

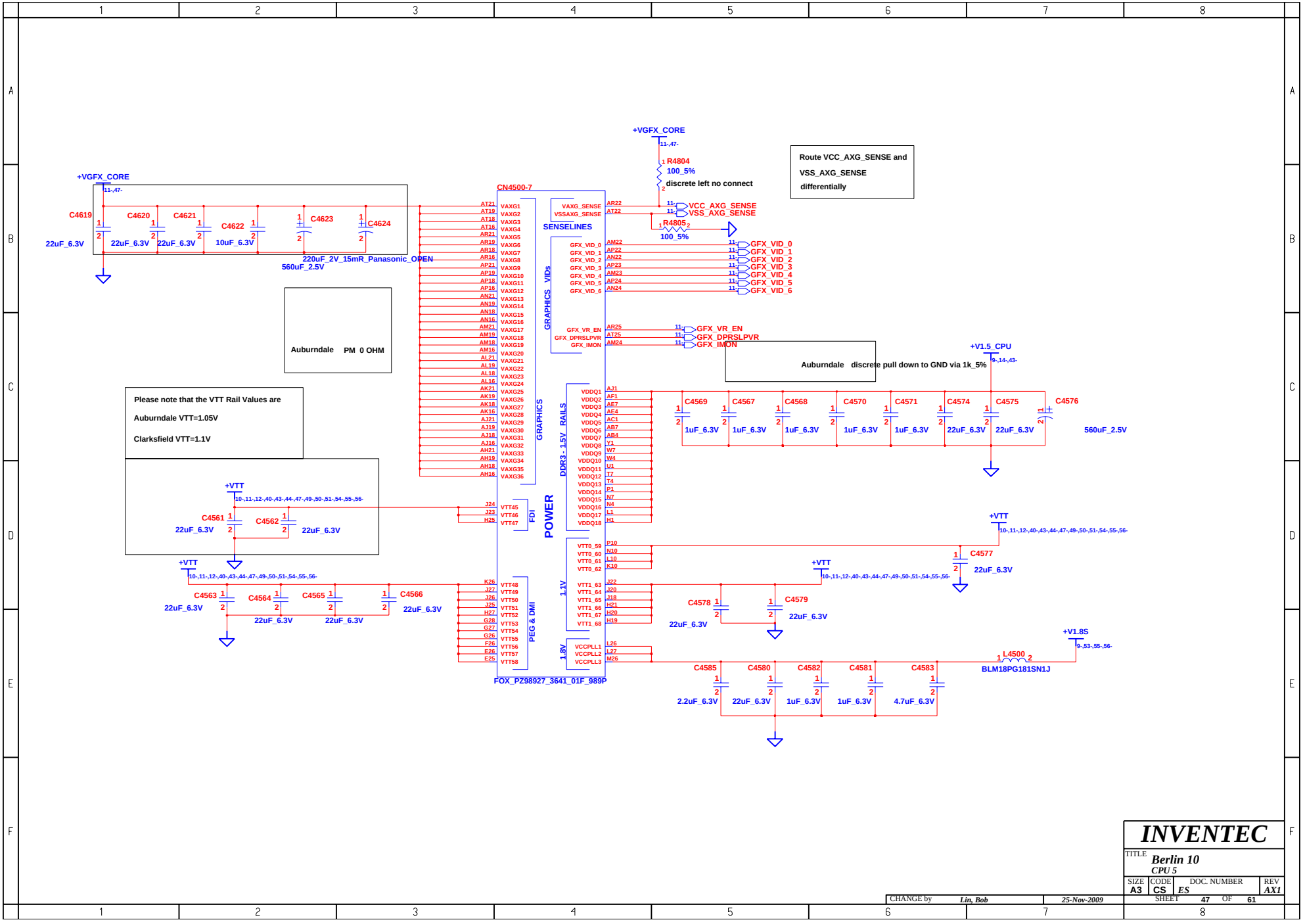

WWW.AliSaler.Com

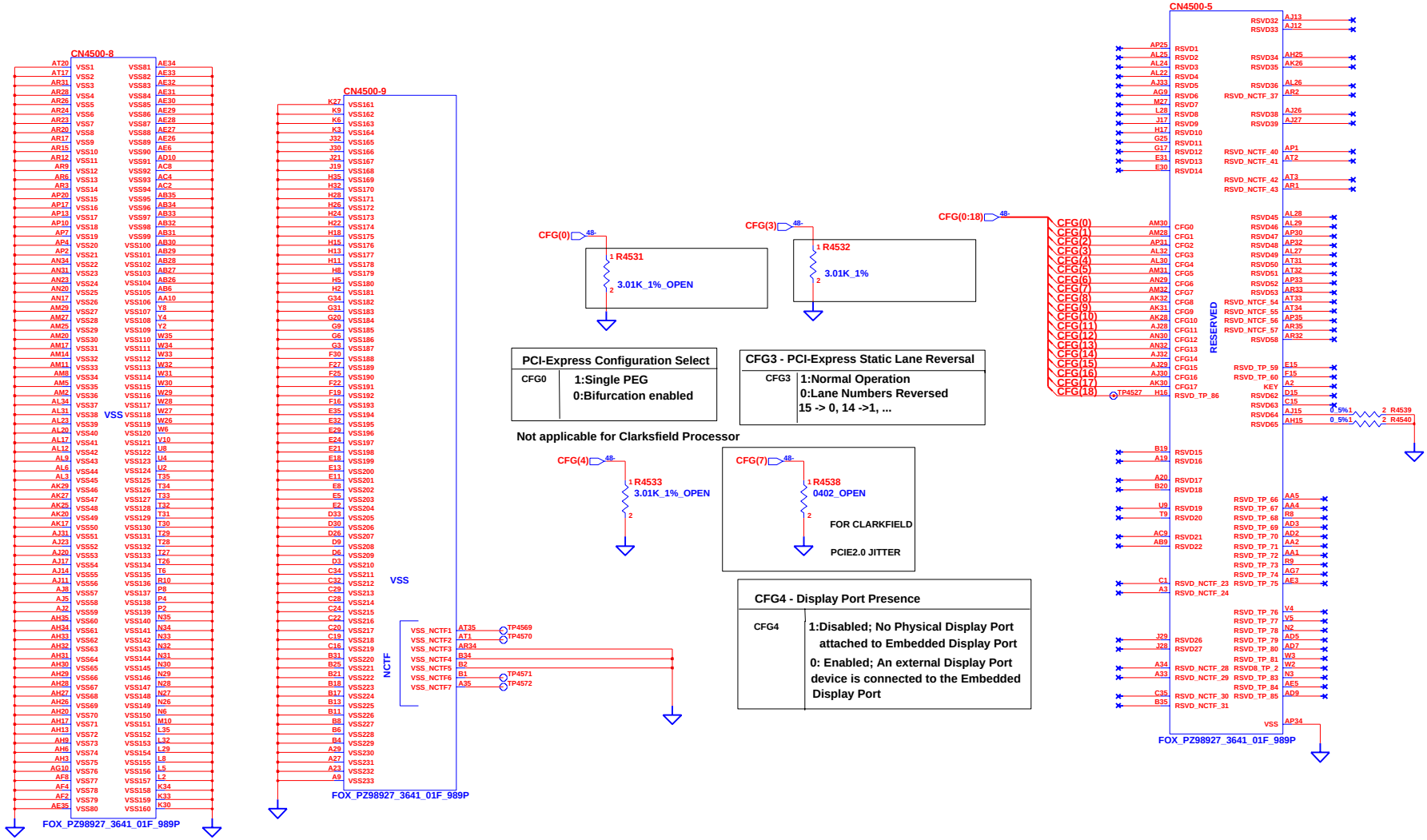

PCI-Express Configuration Select	
CFG0	1:Single PEG 0:Bifurcation enabled

Not applicable for Clarksfield Processor

CFG3 - PCI-Express Static Lane Reversal	
CFG3	1:Normal Operation 0:Lane Numbers Reversed 15 -> 0, 14 ->1, ...

CFG4 - Display Port Presence	
CFG4	1:Disabled; No Physical Display Port attached to Embedded Display Port 0: Enabled; An external Display Port device is connected to the Embedded Display Port

INVENTEC

TITLE Berlin 10
CPU 6

SIZE	CODE	DOC. NUMBER	REV
A3	CS	ES	AX1

SHEET 48 OF 61

CHANGE by Lin, Bob 25-Nov-2009

WWW.AliSaler.Com

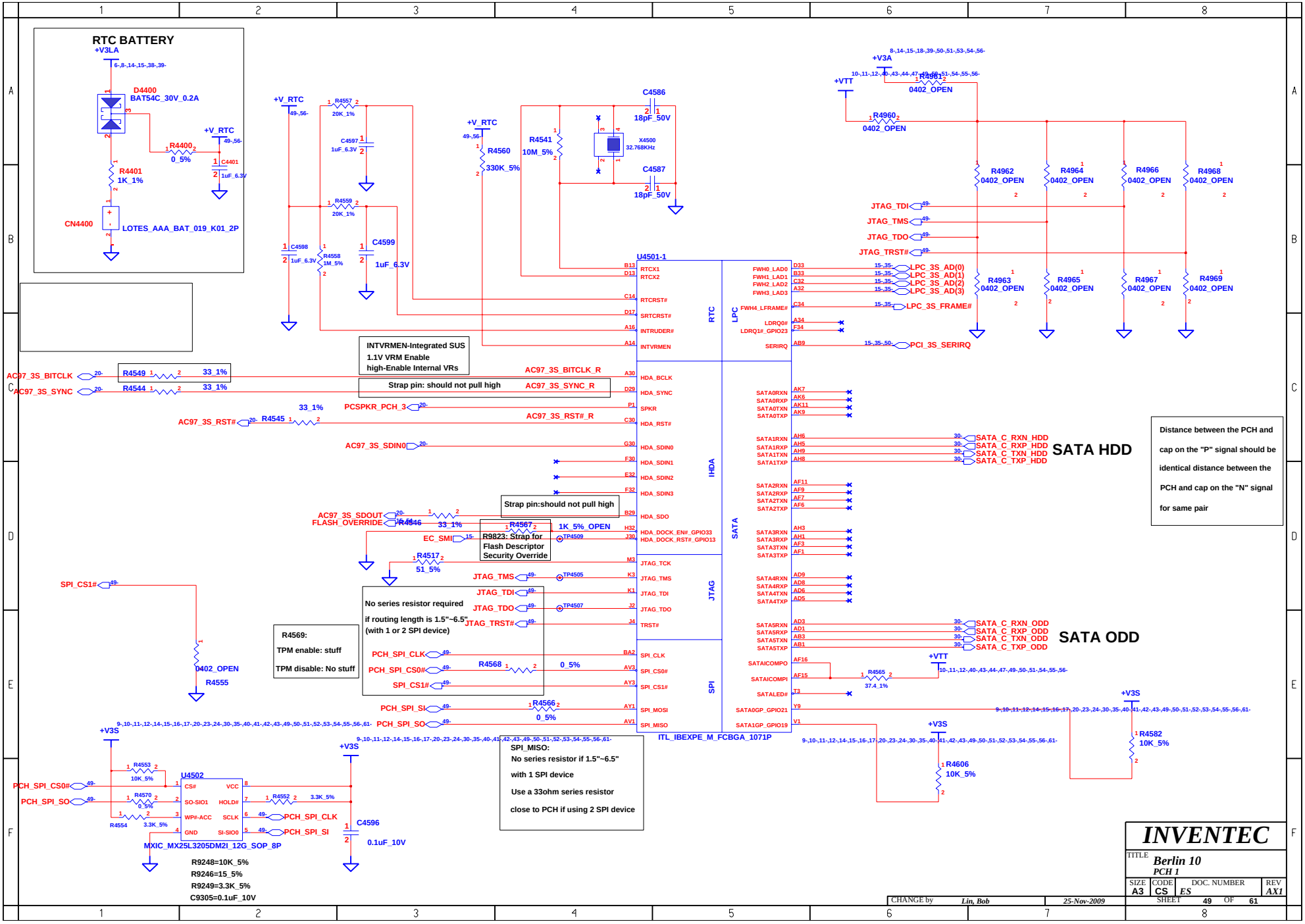

WWW.AliSaler.Com

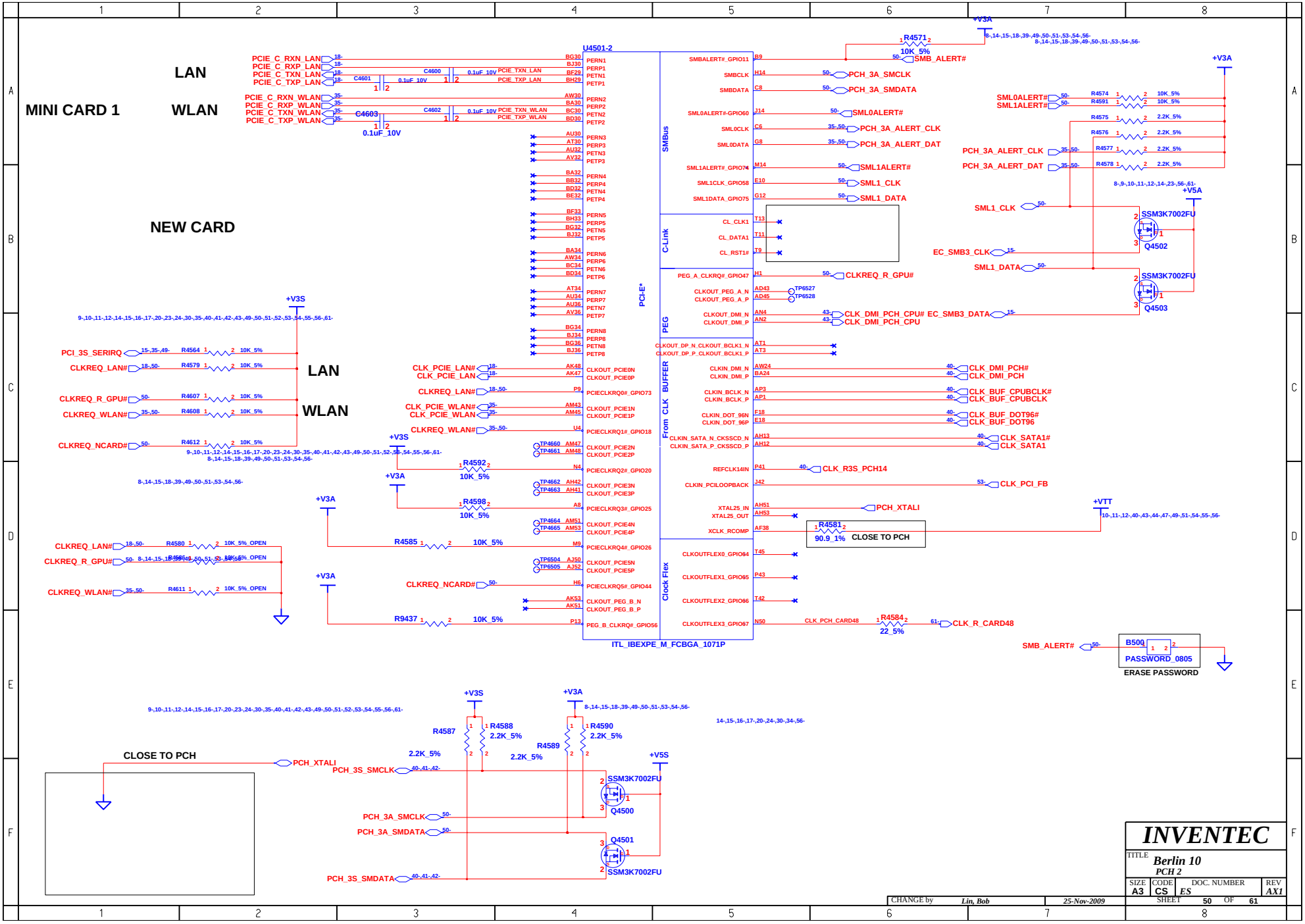

WWW.AliSaler.Com

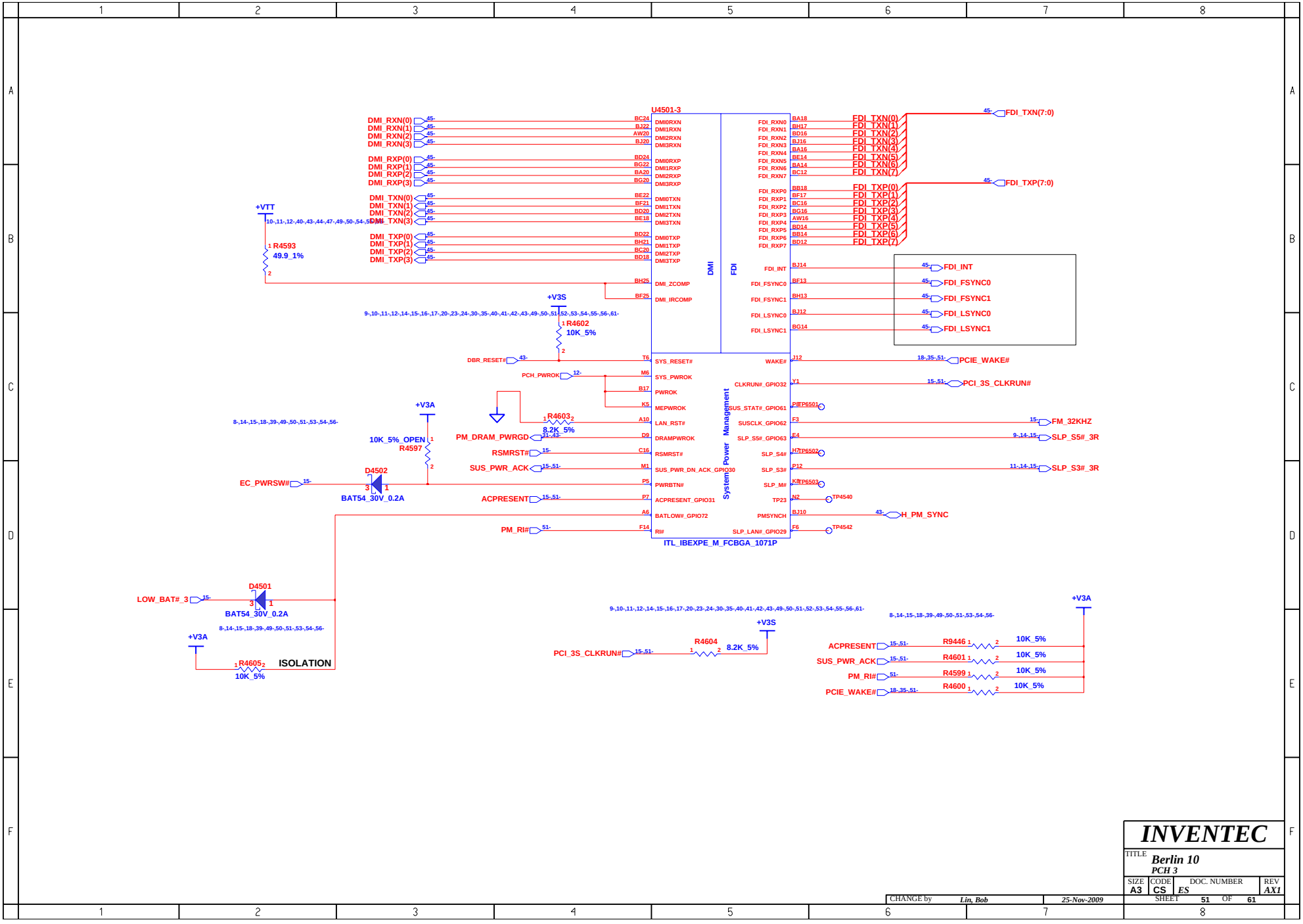

INVENTEC			
TITLE	Berlin 10 PCH 3		
SIZE A3	CODE CS	DOC. NUMBER ES	REV AX1
CHANGE by Lin, Bob	25-Nov-2009	SHEET 51 OF 61	

WWW.AliSaler.Com

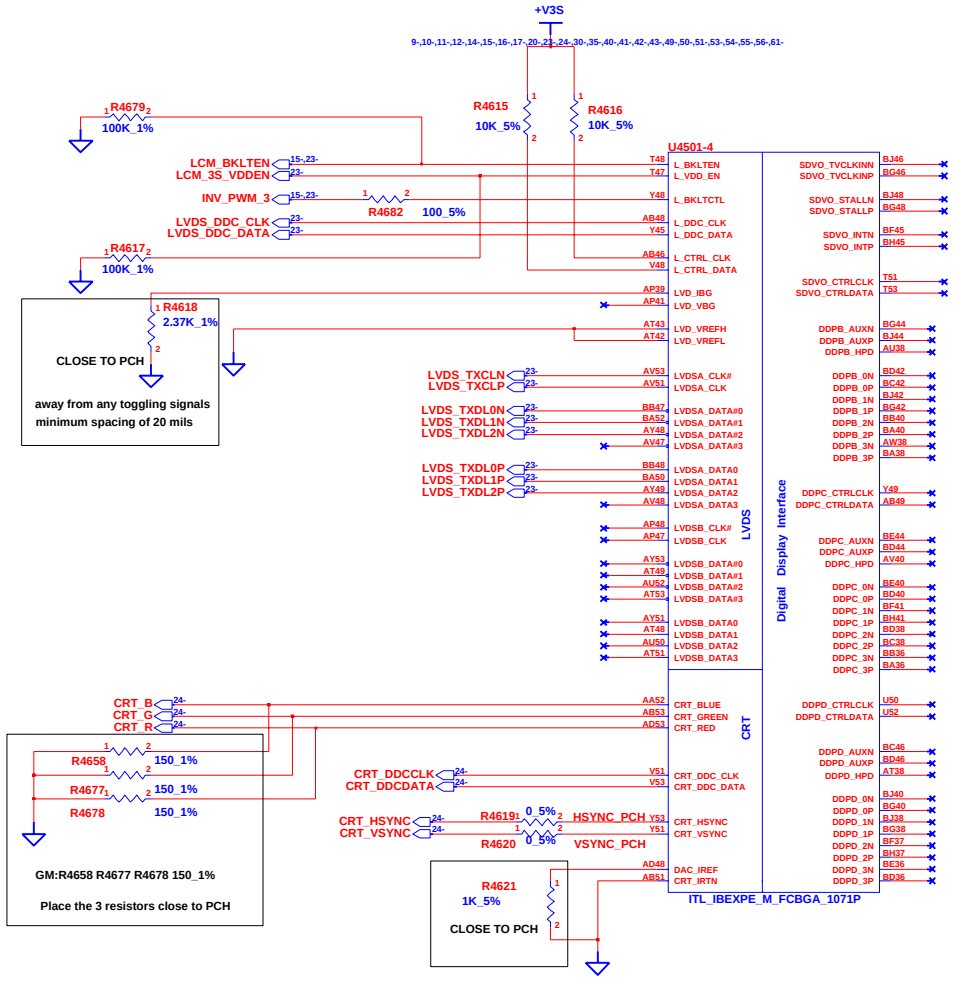

CHANGE by	Lin, Bob	25-Nov-2009	

INVENTEC

TITLE *Berlin 10*
PCH 4

SIZE	CODE	DOC. NUMBER	REV
A3	CS	ES	AX1

SHEET 52 OF 61

WWW.AliSaler.Com

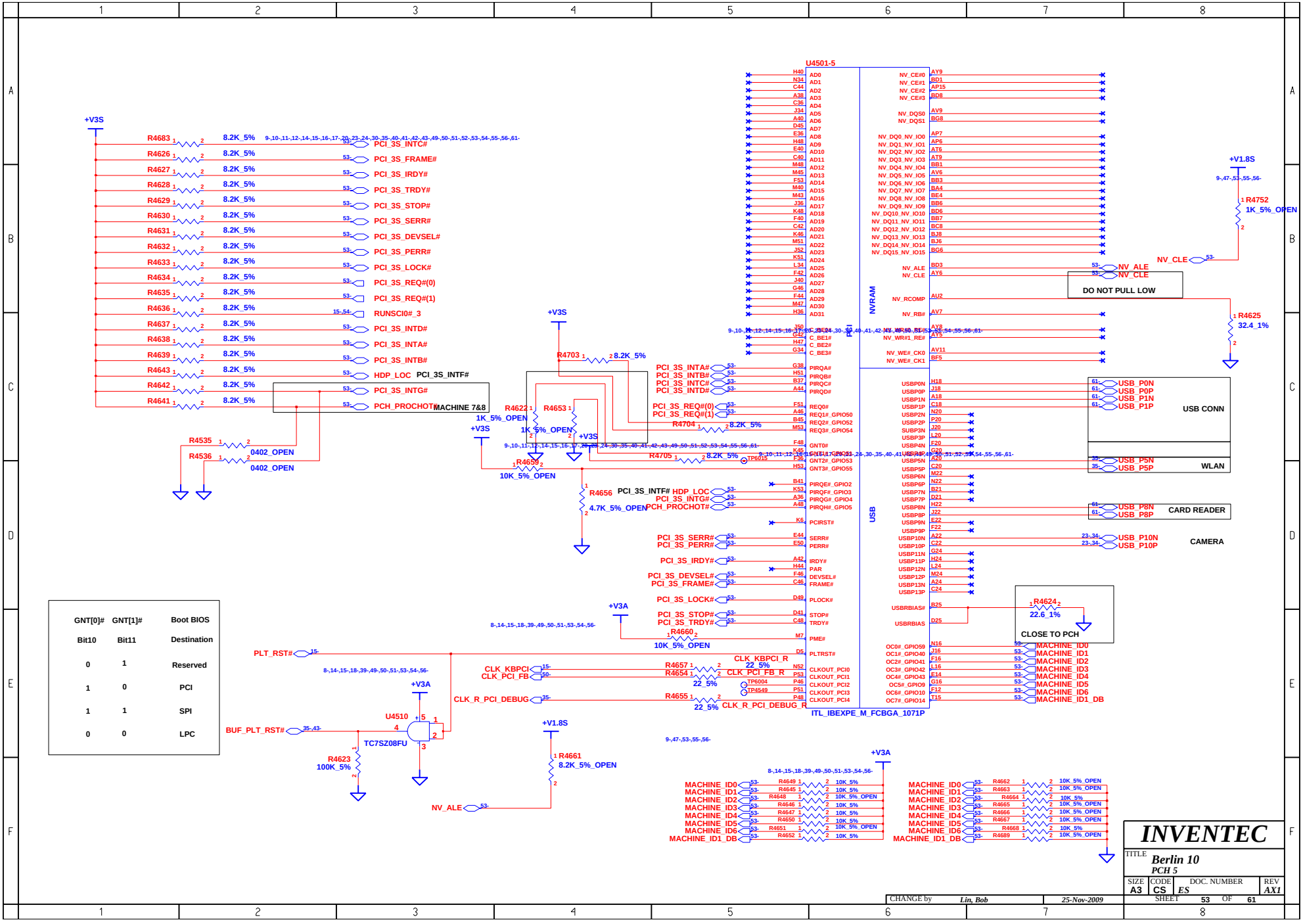

WWW.AliSaler.Com

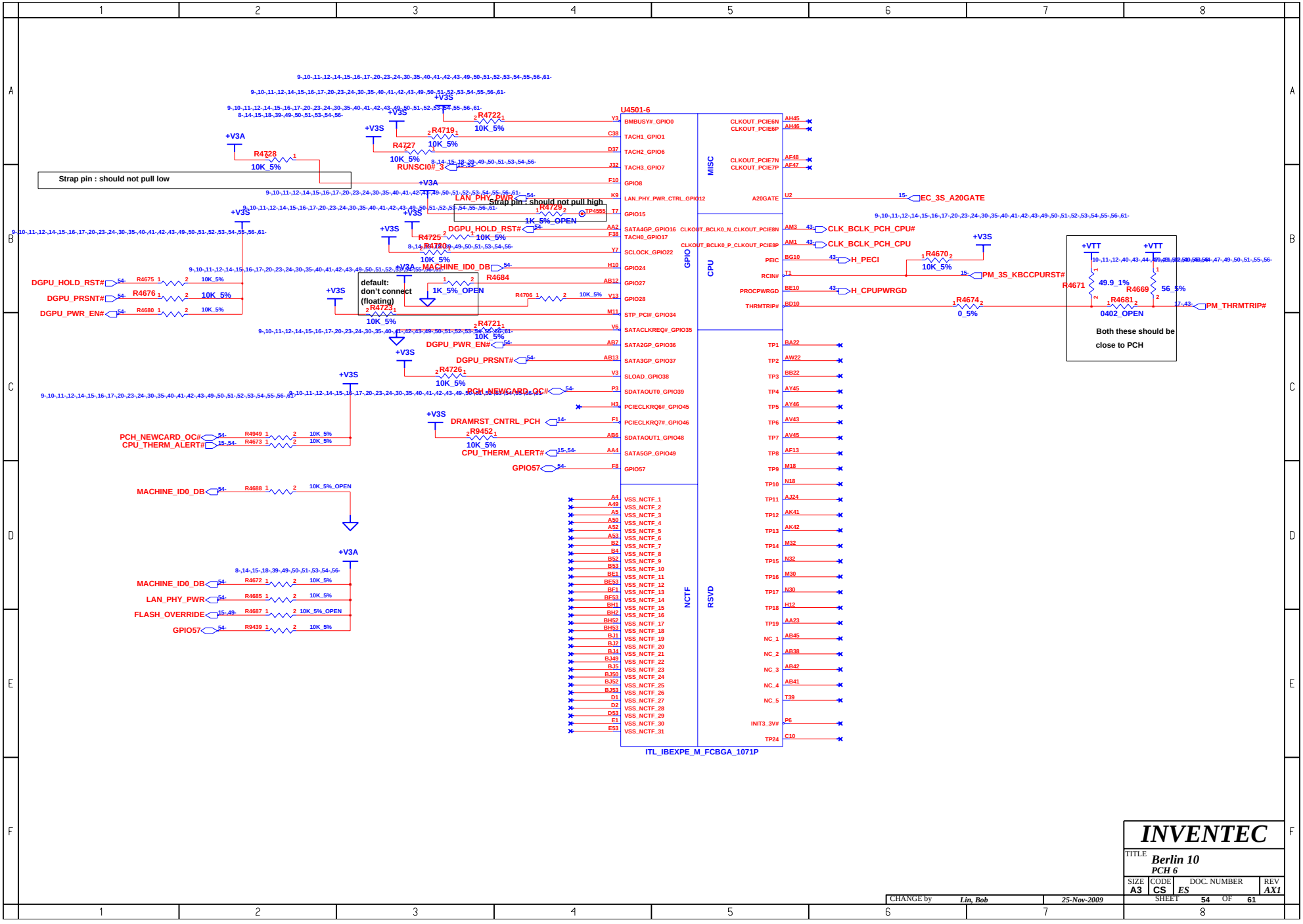

INVENTEC			
TITLE Berlin 10 PCH 6			
SIZE A3	CODE CS	DOC. NUMBER ES	REV AX1
CHANGE by Lin, Bob	25-Nov-2009	SHEET 54 OF 61	

WWW.AliSaler.Com

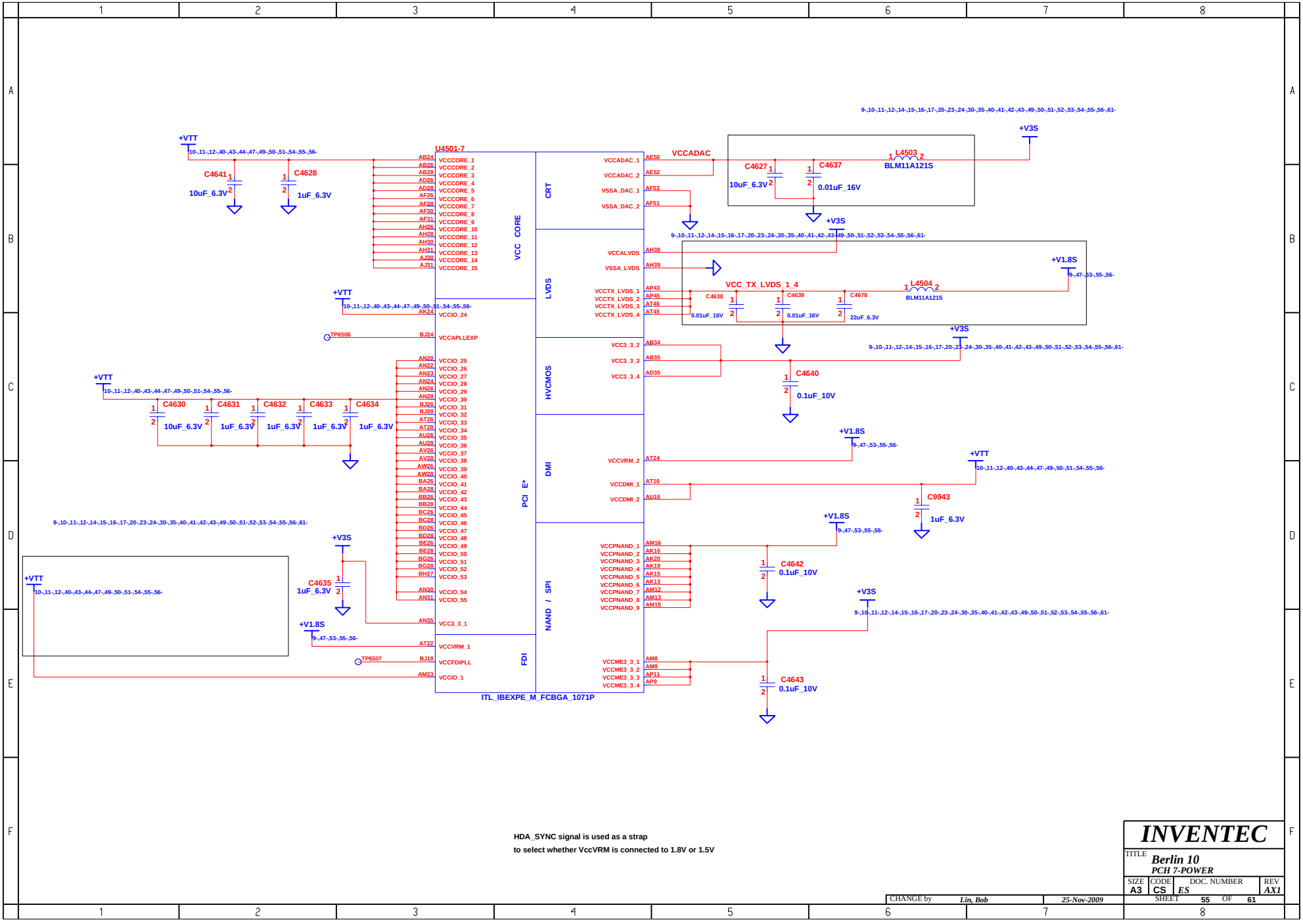

HDA_SYNC signal is used as a strap
to select whether VccVRM is connected to 1.8V or 1.5V

CHANGE by	Lin, Bob	25-Nov-2009	

INVENTEC

TITLE: *Berlin 10*
PCH 7-POWER

SIZE	CODE	DOC. NUMBER	REV
A3	CS	ES	AX1

SHEET 55 OF 61

WWW.AliSaler.Com

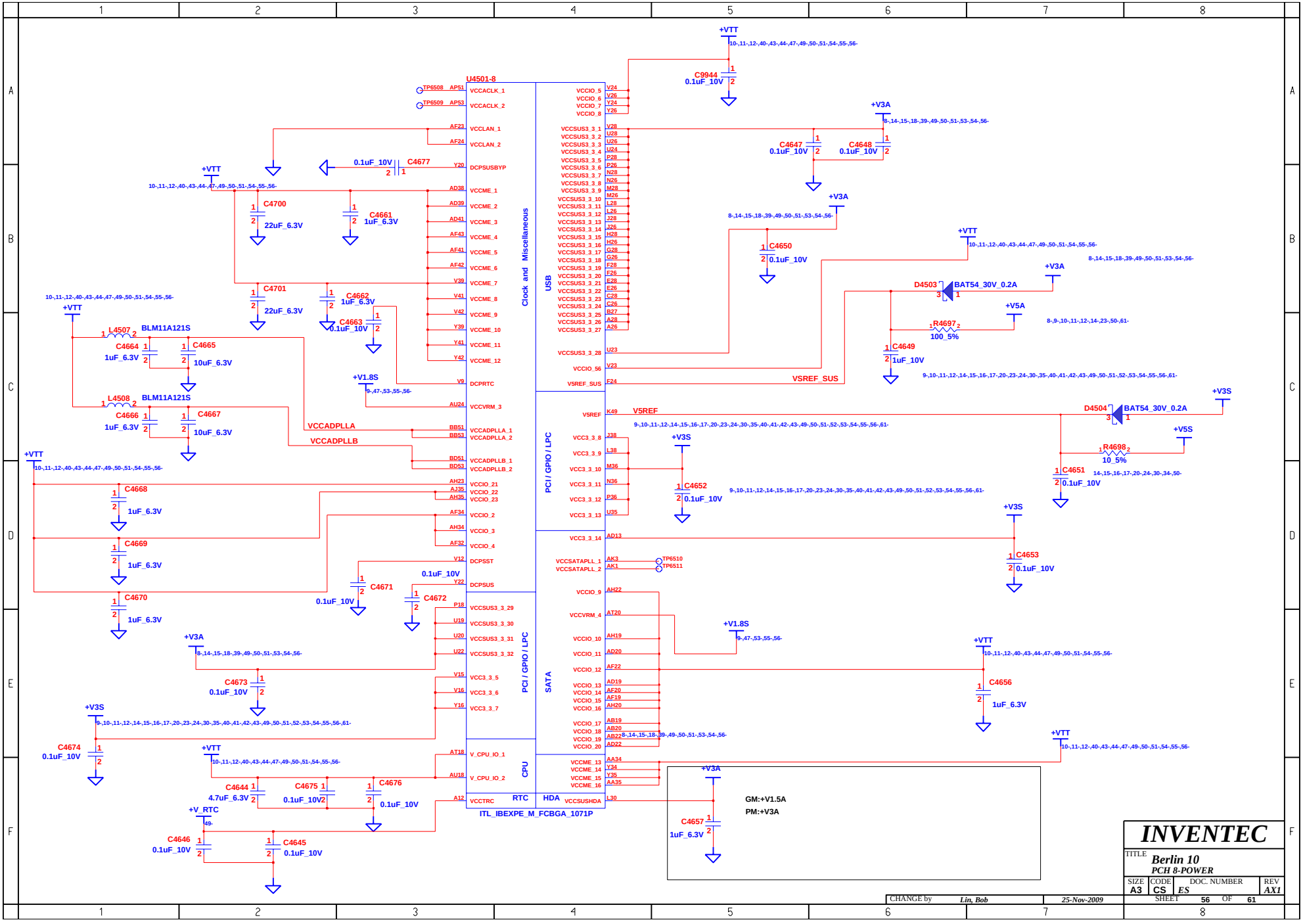

WWW.AliSaler.Com

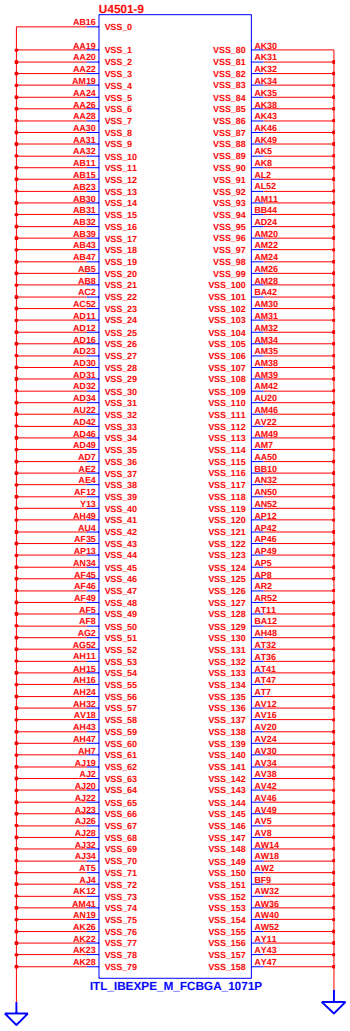

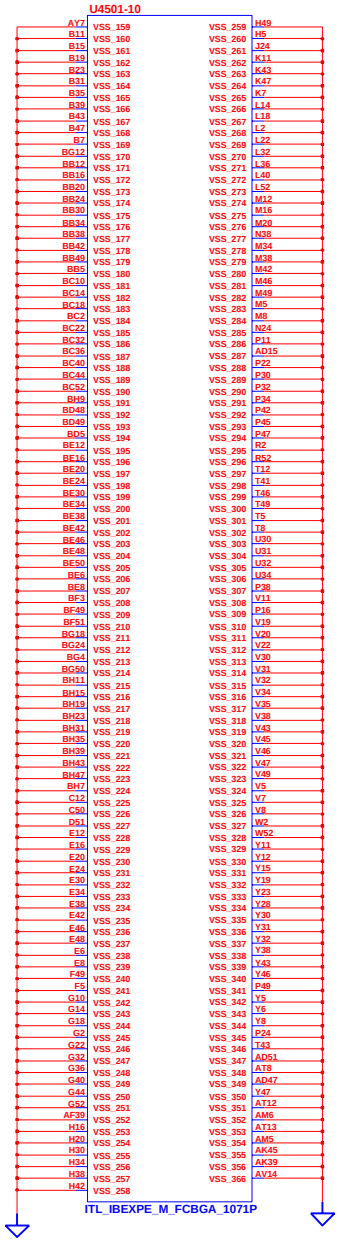

CHANGE by	*Lin, Bob*	*25-Nov-2009*	

INVENTEC

TITLE *Berlin 10*
PCH 9

SIZE	CODE	DOC. NUMBER	REV
A3	CS	*ES*	*AX1*

SHEET 57 OF 61

WWW.AliSaler.Com

PICK BUTTON and EMI

(For - Touchpad Module, Touchpad Switch)

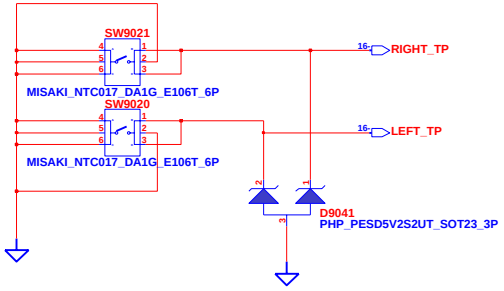

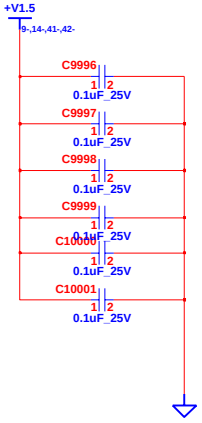

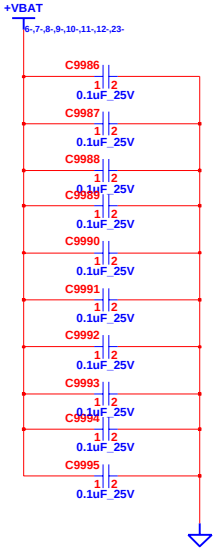

CHANGE by	Lin, Bob	7-Jan-2010	

INVENTEC

TITLE *Berlin 10*
Hot key board

SIZE	CODE	DOC. NUMBER	REV
A3	CS	ES	AX1

SHEET 58 OF 61

WWW.AliSaler.Com

INVENTEC	
TITLE	Berlin 10 Touch pad
SIZE A3	CODE CS
DOC. NUMBER	ES
REV	AX1
CHANGE by	Lin, Bob
	5-Jan-2010
SHEET	59 OF 61

WWW.AliSaler.Com

POWER BUTTON

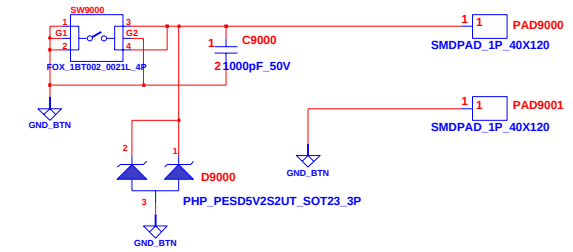

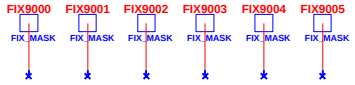

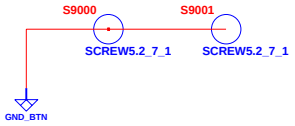

EMI

CHANGE by	Lin, Bob	17-Mar-2010	

INVENTEC

TITLE *Berlin 10*
EMI

SIZE	CODE	DOC. NUMBER	REV
A3	CS	ES	AX1

SHEET 60 OF 61

WWW.AliSaler.Com

CARD READER & USB

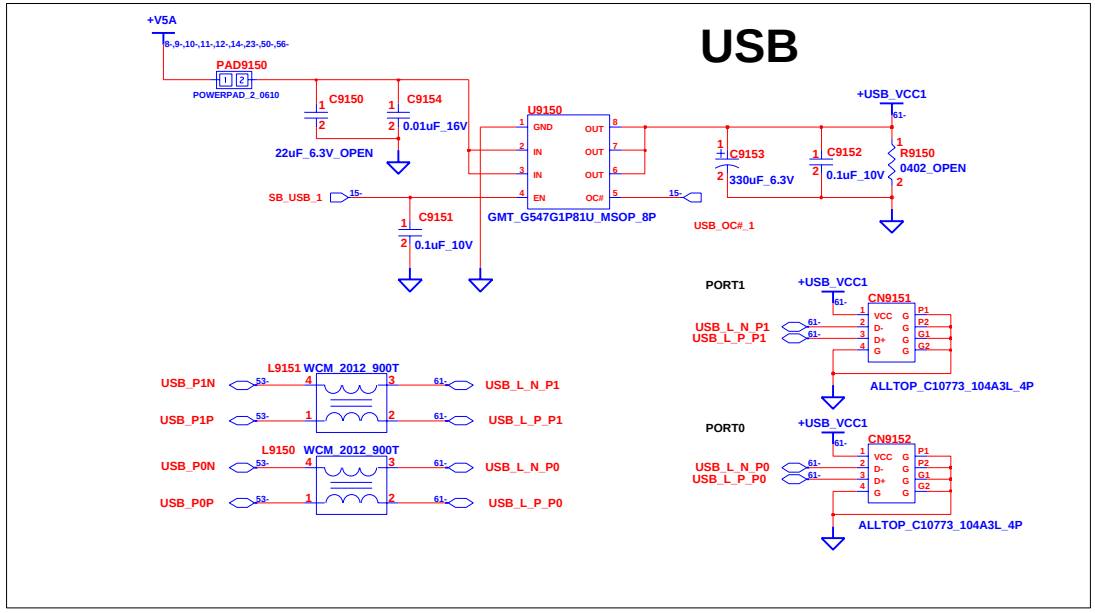

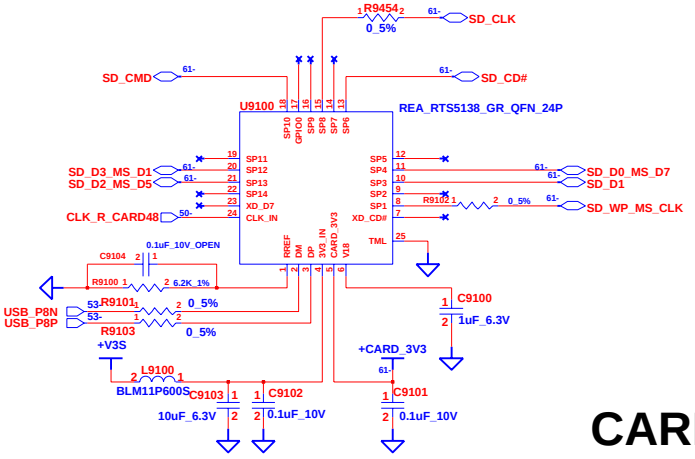

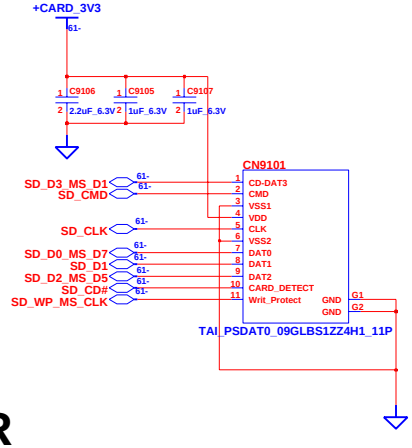

CARD READER

INVENTEC			
TITLE Berlin 10			
SIZE A3	CODE CS	DOC. NUMBER ES	REV AX1
CHANGE by Lin, Bob	25-Nov-2009	SHEET 61 OF 61	

WWW.AliSaler.Com