1. ALL RESISTANCE VALUES ARE IN OHMS, 0.1 WATT +/- 5%.
2. ALL CAPACITANCE VALUES ARE IN MICROFARADS.
3. ALL CRYSTALS & OSCILLATOR VALUES ARE IN HERTZ.

REV	ECN	DESCRIPTION OF REVISION	CK APPD / DATE
<REV>	<ECN>	<ECO_DESCRIPTION>	<ECODATE>

J43 MLB SCHEMATIC DVT
REV 6.5.0
4/09/13

Page (.csa)		Contents	Sync	Date
1	1	Table of Contents	MASTER	MASTER
2	2	BOM Configuration	J41_MLB	04/09/2013
3	3	BOM Variants	K21_MLB	11/16/2010
4	4	PD PARTS	MASTER	MASTER
5	5	CPU GFX/NCTF/RSVD	J41_MLB	02/06/2013
6	6	CPU Misc/JTAG/CFG/RSVD	J41_MLB	04/02/2013
7	7	CPU DDR3/LPDDR3 Interfaces	J41_MLB	02/06/2013
8	8	CPU/PCH POWER	J41_MLB	04/09/2013
9	9	CPU/PCH GROUNDS	J41_MLB	02/06/2013
10	10	CPU Decoupling	WILL_J43	01/08/2013
11	12	PCH Decoupling	J41_MLB	02/07/2013
12	13	PCH Audio/JTAG/SATA/CLK	J41_MLB	02/06/2013
13	14	PCH PM/PCI/GFX	J41_MLB	02/06/2013
14	15	PCH PCIe/USB/LPC/SPI/SMBus	J41_MLB	02/06/2013
15	16	PCH GPIO/MISC/LPIO	J41_MLB	04/02/2013
16	18	CPU/PCH Merged XDP	J41_MLB	02/06/2013
17	19	Chipset Support	J41_MLB	02/06/2013
18	20	Project Chipset Support	J41_MLB	02/15/2013
19	22	DDR3 VREF MARGINING	J41_MLB	02/12/2013
20	23	LPDDR3 DRAM Channel A (0-31)	J41_MLB	02/06/2013
21	24	LPDDR3 DRAM Channel A (32-63)	J41_MLB	02/06/2013
22	25	LPDDR3 DRAM Channel B (0-31)	J41_MLB	02/06/2013
23	26	LPDDR3 DRAM Channel B (32-63)	J41_MLB	02/06/2013
24	27	LPDDR3 DRAM Termination	J41_MLB	02/06/2013
25	28	Thunderbolt Host (1 of 2)	J41_MLB	02/06/2013
26	29	Thunderbolt Host (2 of 2)	J41_MLB	02/06/2013
27	30	TBT Power Support	J41_MLB	02/06/2013
28	32	Thunderbolt Connector A	J41_MLB	02/07/2013
29	35	Wireless Connector	J41_MLB	02/06/2013
30	37	SSD Connector	J41_MLB	04/09/2013
31	39	Camera 1 of 2	J41_MLB	04/02/2013
32	40	Camera 2 of 2	J41_MLB	03/20/2013
33	44	SD READER CONNECTOR	MASTER	07/01/2011
34	45	SD CONTROLLER (GL3219)	MASTER	10/11/2010
35	46	External A USB3 Connector	J41_MLB	02/07/2013
36	48	IPD Connector	J41_MLB	02/12/2013
37	50	SMC	J41_MLB	02/06/2013
38	51	SMC Shared Support	J41_MLB	02/06/2013
39	52	SMC Project Support	J41_MLB	02/06/2013
40	53	SMBus Connections	J41_MLB	02/06/2013
41	54	High Side Current Sensing	J41_MLB	03/28/2013
42	55	Voltage & Load Side Current Sensing	J41_MLB	03/28/2013
43	56	Debug Sensors 1	J41_MLB	03/28/2013
44	58	Thermal Sensors	J41_MLB	02/06/2013
45	60	Fan	J41_MLB	02/06/2013
46	61	LPC+SPI Debug Connector	J41_MLB	04/02/2013
47	64	Audio: Speaker Amp	J41_MLB	02/06/2013
48	69	Battery Connector	MASTER	MASTER
49	70	DC-In & G3H Supply	J41_MLB	02/06/2013
50	71	PBus Supply & Battery Charger	J41_MLB	02/09/2013
51	72	CPU VR12.6 VCC Regulator IC	J41_MLB	04/09/2013
52	73	CPU VR12.5 VCC Power Stage	J41_MLB	04/09/2013
53	74	LPDDR3 Supply	J41_MLB	02/09/2013
54	75	5V S4RS3 / 3.3V S5 Power Supply	J41_MLB	09/17/2012
55	76	1.05V S0 Power Supply	J41_MLB	03/28/2013
56	77	LCD/KBD Backlight Driver	J41_MLB	02/06/2013
57	78	Misc Power Supplies	J41_MLB	02/06/2013
58	80	Power FETs	J41_MLB	02/06/2013
59	81	Power Control	J41_MLB	02/06/2013
60	83	Internal DisplayPort Connector	J41_MLB	02/06/2013
61	95	Left I/O (LIO) Connector	CLEAN_J43	11/13/2012
62	100	Power Aliases	J41_MLB	01/30/2013
63	102	Signal Aliases	J41_MLB	08/30/2012
64	104	Func Test / No Test	J41_MLB	02/01/2013
65	105	Project FCT/NC/Aliases	J41_MLB	09/13/2012
66	110	PCB Rule Definitions	CONSTRAINTS	10/24/2012
67	111	CPU Constraints	CONSTRAINTS	09/25/2012
68	112	PCH Constraints 1	CLEAN_J43	11/13/2012
69	113	PCH Constraints 2	J41_MLB	12/14/2012
70	114	Memory Constraints	CONSTRAINTS	09/25/2012
71	115	Thunderbolt Constraints	CONSTRAINTS	09/25/2012
72	116	Camera Constraints	J41_MLB	01/30/2013
73	117	SMC Constraints	CONSTRAINTS	09/25/2012
74	118	Project Specific Constraints	J41_MLB	12/07/2012
75	119	Project Specific Constraints	CONSTRAINTS	09/25/2012
76	121	Reference	J41_MLB	07/03/2012

ALIASES RESOLVED

Schematic / PCB #'s

PART NUMBER	QTY	DESCRIPTION	REFERENCE DES	CRITICAL	BOM OPTION
051-9800	1	SCHEM,MLB,J43	SCH	CRITICAL	
820-3437	1	PCBF,MLB,J43	PCB	CRITICAL	

DRAWING
TITLE=MLB
ABBREV=DRAWING
LAST_MODIFIED=Tue Apr 9 20:06:04 2013

PRODUCT SAFETY REQUIREMENTS:
PCB, UL RECOGNIZED, MIN. 130-C TEMP. RATING AND V-0 FLAME RATING PER UL 796 & UL 94.
PCB TO BE SILK-SCREENED WITH UL/CUL RECOGNITION MARK, MANUFACTURER'S UL FILE NUMBER, UL PCB MATERIAL DESIGNATION, 130-C TEMP. RATING AND V-0 FLAME RATING.

DRAWING TITLE <PART_DESCRIPTION>

Apple Inc.

DRAWING NUMBER <SCH_NUM> SIZE D
REVISION <E4LABEL>
BRANCH <BRANCH>
PAGE 1 OF 121
SHEET 1 OF 76

NOTICE OF PROPRIETARY PROPERTY:
THE INFORMATION CONTAINED HEREIN IS THE PROPRIETARY PROPERTY OF APPLE INC.
THE POSESSOR AGREES TO THE FOLLOWING:
I TO MAINTAIN THIS DOCUMENT IN CONFIDENCE
II NOT TO REPRODUCE OR COPY IT
III NOT TO REVEAL OR PUBLISH IT IN WHOLE OR PART
IV ALL RIGHTS RESERVED

WWW.AliSaler.Com

BOM Groups

BOM GROUP	BOM OPTIONS
MLB_COMMON	ALTERNATE,COMMON,MLB_MISC,MLB_DEBUG:ENG,MLB_PROGPARTS
MLB_MISC	PP5V5_DCIN:NO,TBTHV:P15V,EDP,CAM_XTAL:NO,CAM_WAKE:NO,APCLKRQ:ISOL,TPAD_INTWAKE:SHARED,USB_PWR:S3,SD_ON_MLB,VCORE_FETS
MLB_DEVEL:ENG	ALTERNATE,BKLT:ENG,XDP_CONN,DDRVREF_DAC,S0PGOOD_ISL,DBGLED,ISNS:ENG
MLB_DEVEL:PVT	XDP_CONN
MLB_DEBUG:ENG	DEVEL_BOM,XDP,LPCPLUS
MLB_DEBUG:PVT	DEVEL_BOM,BKLT:PROD,XDP,LPCPLUS,ISNS:PROD
MLB_DEBUG:PROD	BKLT:PROD,LPCPLUS,XDP,ISNS:PROD

Current Sensor Configuration

BOM GROUP	BOM OPTIONS
ISNS:ENG	CPU_HS_ISNS:YES,CPUVR_ISNS:YES,DRAM_ISNS:YES,P1V05_ISNS:YES,AIRPORT_ISNS:YES,SSD_ISNS:YES,LCDBKLT_ISNS:YES,P3V3S5_ISNS:YES,3V3S0_ISNS:YES,OTHER_HS_ISNS:YES,CAM_ISNS:YES,CPUDDR_ISNS:YES,PANEL_ISNS:YES
ISNS:PROD	CPU_HS_ISNS:YES,CPUVR_ISNS:YES,DRAM_ISNS:YES,P1V05_ISNS:NO,AIRPORT_ISNS:NO,SSD_ISNS:YES,LCDBKLT_ISNS:NO,P3V3S5_ISNS:NO,3V3S0_ISNS:NO,OTHER_HS_ISNS:NO,CAM_ISNS:NO,CPUDDR_ISNS:NO,PANEL_ISNS:NO

CPU DRAM SPD Straps

BOM GROUP	BOM OPTIONS
DDR3:HYNIX_4GB	RAMCFG0:L,RAMCFG1:L,RAMCFG2:L,RAMCFG3:L,DRAM_TYPE:HYNIX_4GB
DDR3:HYNIX_8GB	RAMCFG0:L,RAMCFG1:L,RAMCFG2:H,RAMCFG3:L,DRAM_TYPE:HYNIX_8GB
DDR3:SAMSUNG_4GB	RAMCFG0:L,RAMCFG1:H,RAMCFG2:L,RAMCFG3:L,DRAM_TYPE:SAMSUNG_4GB
DDR3:SAMSUNG_8GB	RAMCFG0:L,RAMCFG1:H,RAMCFG2:H,RAMCFG3:L,DRAM_TYPE:SAMSUNG_8GB
DDR3:ELPIDA_4GB	RAMCFG0:H,RAMCFG1:H,RAMCFG2:L,RAMCFG3:L,DRAM_TYPE:ELPIDA_4GB
DDR3:ELPIDA_8GB	RAMCFG0:H,RAMCFG1:H,RAMCFG2:H,RAMCFG3:L,DRAM_TYPE:ELPIDA_8GB
DDR3:MICRON_4GB	RAMCFG0:H,RAMCFG1:L,RAMCFG2:L,RAMCFG3:L,DRAM_TYPE:MICRON_4GB

CPU DRAM CFG Chart

VENDOR	CFG 1	CFG 0
HYNIX	0	0
SAMSUNG	1	0
MICRON	0	1
ELPIDA	1	1

SIZE	CFG 2
4GB	0
8GB	1

DIE REV	CFG 3
A	0
B	1

Programmable Parts

PART NUMBER	QTY	DESCRIPTION	REFERENCE DES	CRITICAL	BOM OPTION
335S0865	1	EEPROM,256KBIT,SPI,5MHZ,1.8V,2X3QFN	U2890	CRITICAL	TBTROM:BLANK
341S3802	1	IC,EEPROM,C/R (V23.4) EVT,J41/J41	U2890	CRITICAL	TBTROM:PROG
338S1159	1	IC,SMC12-A3,40MHZ/50DMIPS MCU,9X9,157BGA	U5000	CRITICAL	SMC:BLANK
335S0809	1	64 MBIT SPI SERIAL DUAL I/O FLASH,8X6X0.8	U6100	CRITICAL	BOOTROM_MAC:BLANK
335S0803	1	64 MBIT SPI SERIAL DUAL I/O FLASH,8X6X0.8	U6100	CRITICAL	BOOTROM_NUM:BLANK
341S3809	1	IC,EFI ROM (V0071) DVT,J41/J43	U6100	CRITICAL	BOOTROM:PROG

Module Parts

PART NUMBER	QTY	DESCRIPTION	REFERENCE DES	CRITICAL	BOM OPTION
337S4525	1	HSW,SR16M,PRQ,C0,1.3,15W,2+3,1.0,3M,BGA	U0500	CRITICAL	CPU:1.3GHZ
337S4526	1	HSW,SR16L,PRQ,C0,1.4,15W,2+3,1.1,3M,BGA	U0500	CRITICAL	CPU:1.4GHZ
337S4528	1	HSW,SR16H,PRQ,C0,1.7,15W,2+3,1.1,4M,BGA	U0500	CRITICAL	CPU:1.7GHZ
338S1113	1	IC,TBT,CR-4C,B1,PRQ,CIO,288,12X12 FC-CSP	U2800	CRITICAL	
338S1186	1	IC,BCM15700A2,S2 PCIE CAMERA PROCESSOR	U3900	CRITICAL	
607-6811	1	ASSEMBLY,SUBASSY,PCBA,HALL EFFECT,K99	J6955	CRITICAL	J41_MLB
946-3892	1	J11/J13 MLB DYMAX ADHESIVE 29993-SC 0.4G	GLUE	CRITICAL	
825-7670	1	LABEL,TEXT,MLB,K21/K78	LABEL		
376S0964	2	MOSFET,N-CH,25V,30A,9.6M,8P 3.3X3.3 DFN	Q7310,Q7320	CRITICAL	VCORE_FET:REN
376S1104	2	MOSFET,N-CH,25V,30A,6.1M,8P 3.3X3.3 DFN	Q7311,Q7321	CRITICAL	VCORE_FET:REN
376S1173	2	MOSFET,N-CH,30V,15.3A,12M,8P 3.3X3.3 DFN	Q7310,Q7320	CRITICAL	VCORE_FET:VSHY
376S1174	2	MOSFET,N-CH,30V,22A,6.0M,8P 3.3X3.3 DFN	Q7311,Q7321	CRITICAL	VCORE_FET:VSHY
900-0090	1		SOLDERPASTE	CRITICAL	

DRAM Parts

PART NUMBER	QTY	DESCRIPTION	REFERENCE DES	CRITICAL	BOM OPTION
333S0677	4	IC,SDRAM,8Gb,LPDDR3-1600,178P FBGA	U2300,U2400,U2500,U2600	CRITICAL	DRAM_TYPE:HYNIX_4GB
333S0681	4	IC,SDRAM,16Gb,LPDDR3-1600,178P FBGA	U2300,U2400,U2500,U2600	CRITICAL	DRAM_TYPE:HYNIX_8GB
333S0676	4	IC,SDRAM,8Gb,LPDDR3-1600,178P FBGA	U2300,U2400,U2500,U2600	CRITICAL	DRAM_TYPE:SAMSUNG_4GB
333S0680	4	IC,SDRAM,16Gb,LPDDR3-1600,178P FBGA	U2300,U2400,U2500,U2600	CRITICAL	DRAM_TYPE:SAMSUNG_8GB
333S0678	4	IC,SDRAM,8Gb,LPDDR3-1600,178P FBGA	U2300,U2400,U2500,U2600	CRITICAL	DRAM_TYPE:ELPIDA_4GB
333S0666	4	IC,SDRAM,16Gb,LPDDR3-1600,178P FBGA	U2300,U2400,U2500,U2600	CRITICAL	DRAM_TYPE:ELPIDA_8GB
333S0679	4	IC,SDRAM,8Gb,LPDDR3-1600,178P FBGA	U2300,U2400,U2500,U2600	CRITICAL	DRAM_TYPE:MICRON_4GB

Alternate Parts

PART NUMBER	ALTERNATE FOR PART NUMBER	BOM OPTION	REF DES	COMMENTS:
376S1032	376S0855		ALL	Toshiba alt for Diodes dual
376S1129	376S0855		ALL	NXP alt for Diodes dual
376S1089	376S1128		ALL	NXP alt for Diodes single
138S0684	138S0660		ALL	Murata alt to Taiyo Yuden
138S0703	138S0648		ALL	Murata alt to Taiyo Yuden
152S0586	152S1301		ALL	Dale/Vishay alt to Cyntec
372S0186	372S0185		ALL	NXP alt to Diodes
197S0479	197S0478		ALL	200uW Epson alt to NDK
376S1053	376S0604		ALL	Diodes alt to Fairchild
371S0713	371S0558		ALL	Diodes alt to ST Micro
128S0371	128S0376		ALL	Kemet alt to Sanyo
128S0394	128S0415		ALL	NEC alt to Sanyo
152S1821	152S1757		ALL	Cyntec alt to NEC
197S0480	197S0343		ALL	NDK crystal alt to TXC
197S0481	197S0343		ALL	Epson crystal alt to TXC
107S0254	107S0241		ALL	Cyntec sense R alt to TFT
353S3452	353S1286		ALL	Maxim alt to Microchip
128S0386	128S0284		ALL	Kemet alt to Sanyo
128S0397	128S0325		ALL	Kemet alt to Sanyo
377S0155	377S0104		ALL	OnSemi alt to Infineon
128S0398	128S0220		ALL	Kemet alt to Sanyo
197S0542	197S0544		ALL	NDK alt to TXC
197S0545	197S0544		ALL	Epson alt to TXC
138S0681	138S0638		ALL	Taiyo alt to Samsung
138S0841	138S0638		ALL	Murata alt to Samsung
376S1180	376S0761		ALL	Renesas alt to Vishay
152S1876	152S1804		ALL	TDK alt to Toko
107S0255	107S0240		ALL	Cyntec alt to TFT
107S0250	107S0248		ALL	Cyntec alt to TFT

SYNC_MASTER=J41_MLB SYNC_DATE=04/09/2013

PAGE TITLE
BOM Configuration

Apple Inc.

DRAWING NUMBER <SCH_NUM> SIZE D

REVISION <E4LABEL>

BRANCH <BRANCH>

PAGE 2 OF 121

SHEET 2 OF 76

NOTICE OF PROPRIETARY PROPERTY:
THE INFORMATION CONTAINED HEREIN IS THE PROPRIETARY PROPERTY OF APPLE INC.
THE POSESSOR AGREES TO THE FOLLOWING:
I TO MAINTAIN THIS DOCUMENT IN CONFIDENCE
II NOT TO REPRODUCE OR COPY IT
III NOT TO REVEAL OR PUBLISH IT IN WHOLE OR PART
IV ALL RIGHTS RESERVED

WWW.AliSaler.Com

BOM Variants NOTE: All the "GOOD" BOM Configs have been de-activated

BOM NUMBER	BOM NAME	BOM OPTIONS
639-4146	PCBA,MLB,GOOD,HY-4GB,J43	MLB_CMNPTS,CPU:1.3GHZ,DDR3:HYNIX_4GB
639-4293	PCBA,MLB,GOOD,HY-8GB,J43	MLB_CMNPTS,CPU:1.3GHZ,DDR3:HYNIX_8GB
639-4294	PCBA,MLB,GOOD,EL-4GB,J43	MLB_CMNPTS,CPU:1.3GHZ,DDR3:ELPIDA_4GB
639-4295	PCBA,MLB,GOOD,EL-8GB,J43	MLB_CMNPTS,CPU:1.3GHZ,DDR3:ELPIDA_8GB
639-4745	PCBA,MLB,GOOD,MI-4GB,J43	MLB_CMNPTS,CPU:1.3GHZ,DDR3:MICRON_4GB
639-4445	PCBA,MLB,BETTER,HY-4GB,J43	MLB_CMNPTS,CPU:1.3GHZ,DDR3:HYNIX_4GB
639-4446	PCBA,MLB,BETTER,HY-8GB,J43	MLB_CMNPTS,CPU:1.3GHZ,DDR3:HYNIX_8GB
639-4447	PCBA,MLB,BETTER,EL-4GB,J43	MLB_CMNPTS,CPU:1.3GHZ,DDR3:ELPIDA_4GB
639-4448	PCBA,MLB,BETTER,EL-8GB,J43	MLB_CMNPTS,CPU:1.3GHZ,DDR3:ELPIDA_8GB
639-4746	PCBA,MLB,BETTER,MI-4GB,J43	MLB_CMNPTS,CPU:1.3GHZ,DDR3:MICRON_4GB
639-4755	PCBA,MLB,BEST,HY-4GB,J43	MLB_CMNPTS,CPU:1.7GHZ,DDR3:HYNIX_4GB
639-4756	PCBA,MLB,BEST,HY-8GB,J43	MLB_CMNPTS,CPU:1.7GHZ,DDR3:HYNIX_8GB
639-4757	PCBA,MLB,BEST,EL-4GB,J43	MLB_CMNPTS,CPU:1.7GHZ,DDR3:ELPIDA_4GB
639-4758	PCBA,MLB,BEST,EL-8GB,J43	MLB_CMNPTS,CPU:1.7GHZ,DDR3:ELPIDA_8GB
639-4759	PCBA,MLB,BEST,MI-4GB,J43	MLB_CMNPTS,CPU:1.7GHZ,DDR3:MICRON_4GB
685-0025	CMN PTS,PCBA,MLB,J43	MLB_COMMON
985-0018	J43 MLB DEVELOPMENT BOM	MLB_DEVEL:ENG
685-0064	VCORE FET,REN,J43	VCORE_FET:REN
685-0065	VCORE FET,VSHY,J43	VCORE_FET:VSHY

Alternate Parts

PART NUMBER	ALTERNATE FOR PART NUMBER	BOM OPTION	REF DES	COMMENTS:
685-0064	685-0065		ALL	Renesas alt for Vishay
333S0704	333S0700		ALL	Elpida CAM DRAM alt to Hynix

Programmable Parts

PART NUMBER	QTY	DESCRIPTION	REFERENCE DES	CRITICAL	BOM OPTION
341S3758	1	IC,SMC-A3 SCPL,EXT,V22.12a19,PROTO 1,J43	U5000	CRITICAL	SMC:PROG

BOM Groups

BOM GROUP	BOM OPTIONS
MLB_PROGPARTS	BOOTROM:PROG,SMC:PROG,TBTROM:PROG

Module Parts

PART NUMBER	QTY	DESCRIPTION	REFERENCE DES	CRITICAL	BOM OPTION
338S1215	1	IC,GL3219,USB3 SD CARD READER,46P,LQFN	U4500	CRITICAL	

Sub-BOMs

PART NUMBER	QTY	DESCRIPTION	REFERENCE DES	CRITICAL	BOM OPTION
985-0018	1	J43 MLB DEVELOPMENT BOM	DEVEL	CRITICAL	DEVEL_BOM
685-0025	1	CMN PTS,PCBA,MLB,J43	CMNPTS	CRITICAL	MLB_CMNPTS
685-0065	1	VCORE FET,VSHY,J43	VCOREFETS	CRITICAL	VCORE_FETS

SYNC_MASTER=K21_MLB SYNC_DATE=11/16/2010

PAGE TITLE
BOM Variants

Apple Inc.

DRAWING NUMBER <SCH_NUM> SIZE D
REVISION <E4LABEL>
BRANCH <BRANCH>
PAGE 3 OF 121
SHEET 3 OF 76

NOTICE OF PROPRIETARY PROPERTY:
THE INFORMATION CONTAINED HEREIN IS THE PROPRIETARY PROPERTY OF APPLE INC.
THE POSESSOR AGREES TO THE FOLLOWING:
I TO MAINTAIN THIS DOCUMENT IN CONFIDENCE
II NOT TO REPRODUCE OR COPY IT
III NOT TO REVEAL OR PUBLISH IT IN WHOLE OR PART
IV ALL RIGHTS RESERVED

WWW.AliSaler.Com

PD Module Parts

PART NUMBER	QTY	DESCRIPTION	REFERENCE DES	CRITICAL	BOM OPTION
806-5107	1	CAN,TOPSIDE,ALT,J41/J43	TBTTOPSIDE_2P_FENCE	CRITICAL	
806-5108	1	CAN,TOPSIDE,COVER,ALT,J41/J43	TBTTOPSIDE_2P_COVER	CRITICAL	
806-3142	1	CAN,TBT,J11/J13	TBTFENCE	CRITICAL	
806-3215	1	CAN,COVER,TBT,J11/J13	TBTCOVER	CRITICAL	
806-3216	1	CAN,MDP,J11/J13	MDPCAN	CRITICAL	
806-3083	1	SHLD,USB,MLB,J11/J13	USBCAN	CRITICAL	
725-1792	1	INSULATOR,CPU,J41/J43	CPU_INSULATOR	CRITICAL	

Plated Board Slot

SL0400
TH-NSP
SL-2.3X3.9-2.9X4.5

CPU Heat Sink Mounting Bosses

Z0413 STDOFF-4.5OD1.8H-SM
Z0410 STDOFF-4.5OD1.8H-SM
Z0411 STDOFF-4.5OD1.8H-SM
Z0412 STDOFF-4.5OD1.8H-SM
4x 860-1327

Fan Boss

Z0405
STDOFF-4.5OD1.8H-SM
860-1327

X21 Boss

Z0414
STDOFF-4.5OD1.9H-SM
860-1327

SSD Boss

Z0415
STDOFF-4.5OD1.9H-SM
860-1327

EMI I/O Pogo Pins

DisplayPort Pogo

CRITICAL
ZS0405
POGO-2.0OD-3.6H-K86-K87
SM
870-1938

USB/SD Card Pogo

CRITICAL
ZS0406
POGO-2.0OD-3.6H-K86-K87
SM
870-1938

Can Slots

SL0401
TH-NSP
SL-1.1X0.4-1.4X0.7

SL0402
TH-NSP
SL-1.1X0.4-1.4X0.7

2x TBT pin diodes

SL0403
TH-NSP
SL-1.1X0.4-1.4X0.7

SL0406
TH-NSP
SL-1.1X0.4-1.4X0.7

2x MDP Connector

SL0405
TH-NSP
SL-1.1X0.45-1.4X0.75

SL0407
TH-NSP
SL-1.1X0.45-1.4X0.75

2x TBT chip

SL0404
TH-NSP
SL-1.1X0.4-1.4X0.7

SL0408
TH-NSP
SL-1.1X0.4-1.4X0.7

2x USB Connector

SYNC_MASTER=MASTER SYNC_DATE=MASTER

PAGE TITLE
PD PARTS

Apple Inc.

DRAWING NUMBER <SCH_NUM> SIZE D
REVISION <E4LABEL>
BRANCH <BRANCH>
PAGE 4 OF 121
SHEET 4 OF 76

NOTICE OF PROPRIETARY PROPERTY:
THE INFORMATION CONTAINED HEREIN IS THE PROPRIETARY PROPERTY OF APPLE INC.
THE POSESSOR AGREES TO THE FOLLOWING:
I TO MAINTAIN THIS DOCUMENT IN CONFIDENCE
II NOT TO REPRODUCE OR COPY IT
III NOT TO REVEAL OR PUBLISH IT IN WHOLE OR PART
IV ALL RIGHTS RESERVED

WWW.AliSaler.Com

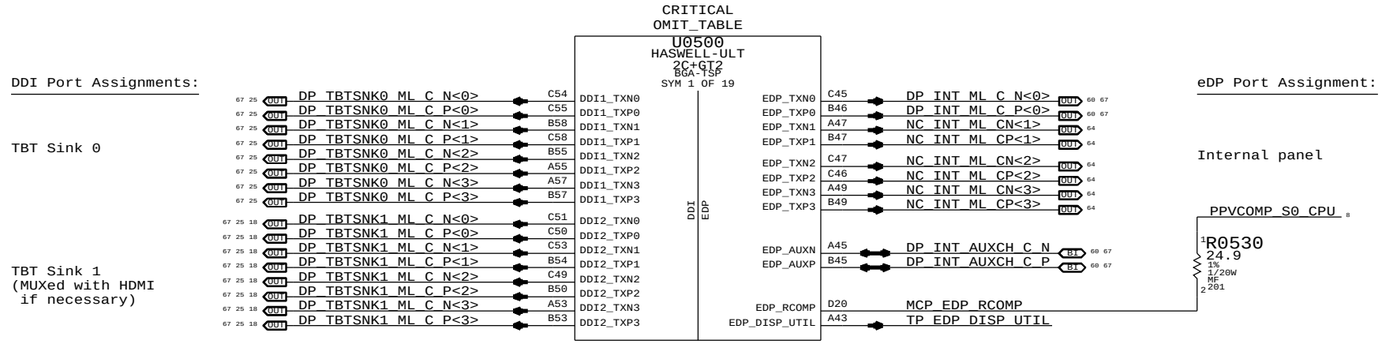

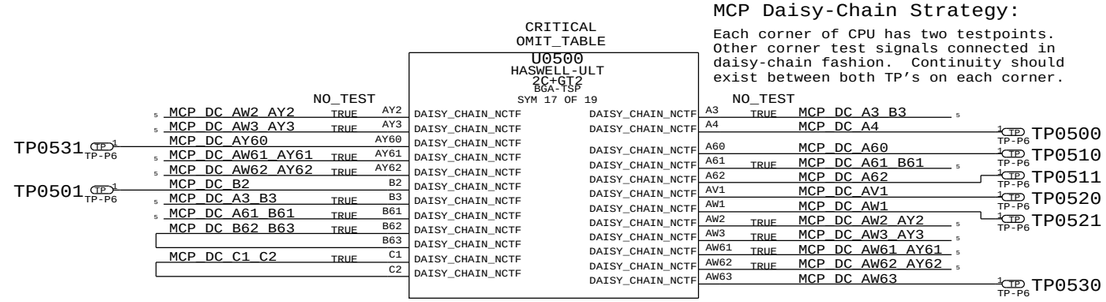

MCP Daisy-Chain Strategy:

Each corner of CPU has two testpoints.
Other corner test signals connected in
daisy-chain fashion. Continuity should
exist between both TP's on each corner.

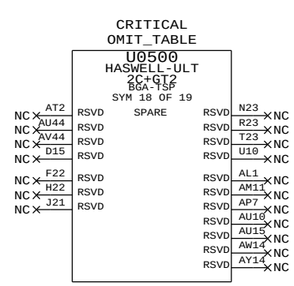

SYNC_MASTER=J41_MLB	SYNC_DATE=02/06/2013
PAGE TITLE	CPU GFX/NCTF/RSVD
Apple Inc.	DRAWING NUMBER <SCH_NUM> SIZE D
	REVISION <E4LABEL>
NOTICE OF PROPRIETARY PROPERTY:	BRANCH <BRANCH>
THE INFORMATION CONTAINED HEREIN IS THE PROPRIETARY PROPERTY OF APPLE INC. THE POSESSOR AGREES TO THE FOLLOWING: I TO MAINTAIN THIS DOCUMENT IN CONFIDENCE II NOT TO REPRODUCE OR COPY IT III NOT TO REVEAL OR PUBLISH IT IN WHOLE OR PART IV ALL RIGHTS RESERVED	PAGE 5 OF 121
	SHEET 5 OF 76

WWW.AliSaler.Com

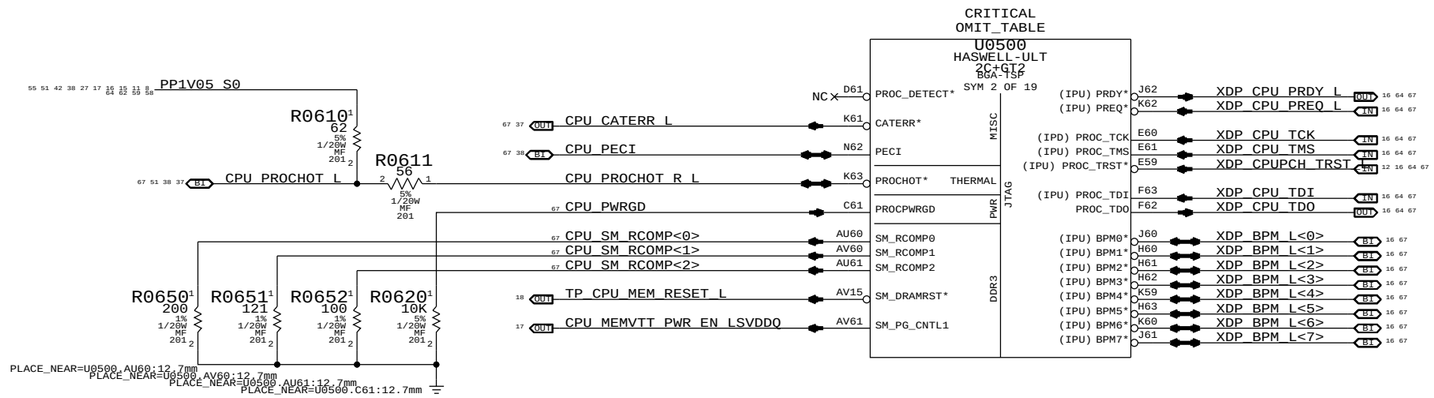

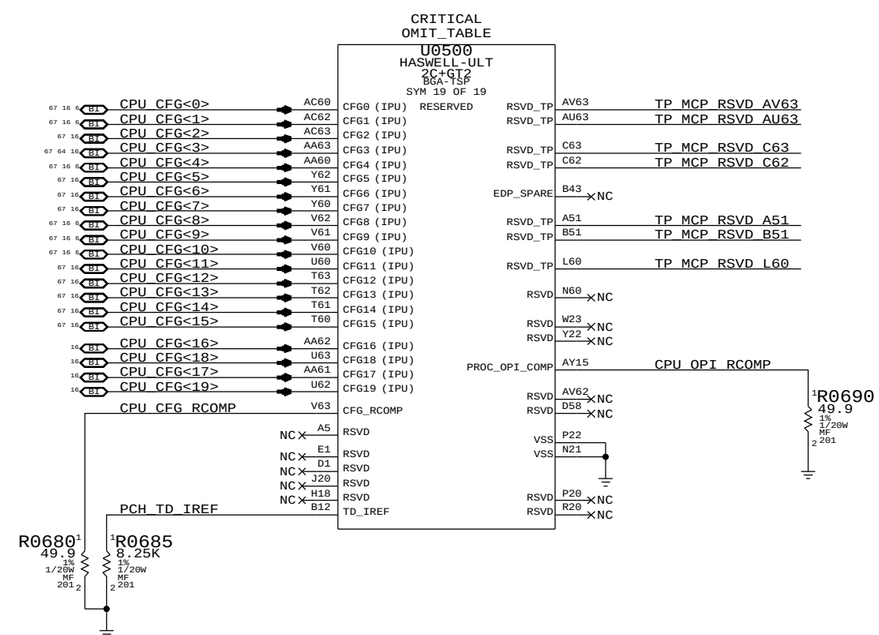

CFG<10>:	SAFE MODE BOOT	1 = NORMAL OPERATION	0 = POWER FEATURES NOT ACTIVE
CFG<9>:	NO SVID-CAPABLE VR	1 = VR SUPPORTS SVID	0 = VR DOES NOT SUPPORT SVID
CFG<8>:	ALLOW NOA ON LOCKED UNITS	1 = NORMAL OPERATION	0 = NOA ALWAYS UNLOCKED
CFG<4>:	eDP ENABLE/DISABLE	1 = DISABLED	0 = ENABLED
CFG<1>:	PCH-LESS MODE	1 = NORMAL OPERATION	0 = PCH-LESS MODE
CFG<0>:	RESET SEQUENCE STALL	1 = NORMAL OPERATION	0 = STALL AFTER PCU PLL LOCK

These can be placed close to J1800
and are only for debug access

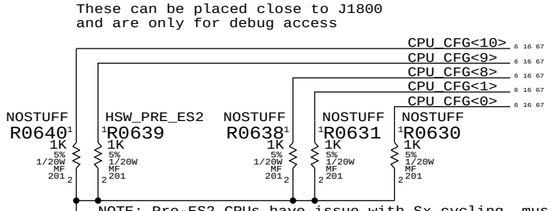

NOTE: Pre-ES2 CPUs have issue with Sx cycling, must set CFG<9> low to avoid issue, but this locks CPU VR at 1.7V Vboot (CPU Sighting #4391569).

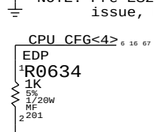

SYNC_MASTER=J41_MLB SYNC_DATE=04/02/2013

PAGE TITLE
CPU Misc/JTAG/CFG/RSVD

Apple Inc.

DRAWING NUMBER <SCH_NUM> SIZE D
REVISION <E4LABEL>
BRANCH <BRANCH>
PAGE 6 OF 121
SHEET 6 OF 76

NOTICE OF PROPRIETARY PROPERTY:
THE INFORMATION CONTAINED HEREIN IS THE PROPRIETARY PROPERTY OF APPLE INC.
THE POSESSOR AGREES TO THE FOLLOWING:
I TO MAINTAIN THIS DOCUMENT IN CONFIDENCE
II NOT TO REPRODUCE OR COPY IT
III NOT TO REVEAL OR PUBLISH IT IN WHOLE OR PART
IV ALL RIGHTS RESERVED

WWW.AliSaler.Com

CRITICAL
OMIT_TABLE

U0500
HASWELL-ULT
2C+GT2
BGA-TSP
SYM 3 OF 19

MEMORY CHANNEL A

MEM A DQ<0>	AH63	SA_DQ0			
MEM A DQ<1>	AH62	SA_DQ1			
MEM A DQ<2>	AK63	SA_DQ2			
MEM A DQ<3>	AK62	SA_DQ3			
MEM A DQ<4>	AH61	SA_DQ4			
MEM A DQ<5>	AH60	SA_DQ5			
MEM A DQ<6>	AK61	SA_DQ6			
MEM A DQ<7>	AK60	SA_DQ7			
MEM A DQ<8>	AM63	SA_DQ8			
MEM A DQ<9>	AM62	SA_DQ9			
MEM A DQ<10>	AP63	SA_DQ10			
MEM A DQ<11>	AP62	SA_DQ11			
MEM A DQ<12>	AM61	SA_DQ12			
MEM A DQ<13>	AM60	SA_DQ13			
MEM A DQ<14>	AP61	SA_DQ14			
MEM A DQ<15>	AP60	SA_DQ15			
MEM A DQ<16>	AP58	SA_DQ16			
MEM A DQ<17>	AR58	SA_DQ17			
MEM A DQ<18>	AM57	SA_DQ18			
MEM A DQ<19>	AK57	SA_DQ19			
MEM A DQ<20>	AL58	SA_DQ20			
MEM A DQ<21>	AK58	SA_DQ21			
MEM A DQ<22>	AR57	SA_DQ22			
MEM A DQ<23>	AN57	SA_DQ23			
MEM A DQ<24>	AP55	SA_DQ24			
MEM A DQ<25>	AR55	SA_DQ25			
MEM A DQ<26>	AM54	SA_DQ26			
MEM A DQ<27>	AK54	SA_DQ27			
MEM A DQ<28>	AL55	SA_DQ28			
MEM A DQ<29>	AK55	SA_DQ29			
MEM A DQ<30>	AR54	SA_DQ30			
MEM A DQ<31>	AN54	SA_DQ31			
MEM A DQ<32>	AY58	SA_DQ32			
MEM A DQ<33>	AW58	SA_DQ33			
MEM A DQ<34>	AY56	SA_DQ34			
MEM A DQ<35>	AW56	SA_DQ35			
MEM A DQ<36>	AV58	SA_DQ36			
MEM A DQ<37>	AU58	SA_DQ37			
MEM A DQ<38>	AV56	SA_DQ38			
MEM A DQ<39>	AU56	SA_DQ39			
MEM A DQ<40>	AY54	SA_DQ40			
MEM A DQ<41>	AW54	SA_DQ41			
MEM A DQ<42>	AY52	SA_DQ42			
MEM A DQ<43>	AW52	SA_DQ43			
MEM A DQ<44>	AV54	SA_DQ44			
MEM A DQ<45>	AU54	SA_DQ45			
MEM A DQ<46>	AV52	SA_DQ46			
MEM A DQ<47>	AU52	SA_DQ47			
MEM A DQ<48>	AK40	SA_DQ48			
MEM A DQ<49>	AK42	SA_DQ49			
MEM A DQ<50>	AM43	SA_DQ50			
MEM A DQ<51>	AM45	SA_DQ51			
MEM A DQ<52>	AM45	SA_DQ52			
MEM A DQ<53>	AK43	SA_DQ53			
MEM A DQ<54>	AM40	SA_DQ54			
MEM A DQ<55>	AM42	SA_DQ55			
MEM A DQ<56>	AM46	SA_DQ56			
MEM A DQ<57>	AK46	SA_DQ57			
MEM A DQ<58>	AM49	SA_DQ58			
MEM A DQ<59>	AK49	SA_DQ59			
MEM A DQ<60>	AM48	SA_DQ60			
MEM A DQ<61>	AK48	SA_DQ61			
MEM A DQ<62>	AM51	SA_DQ62			
MEM A DQ<63>	AK51	SA_DQ63			

		SA_CLK0*	AU37	MEM A CLK N<0>	20 24 70
		SA_CLK0	AV37	MEM A CLK P<0>	20 24 70
		SA_CLK1*	AW36	MEM A CLK N<1>	21 24 70
		SA_CLK1	AY36	MEM A CLK P<1>	21 24 70
		SA_CKE0	AU43	MEM A CKE<0>	20 24 70
		SA_CKE1	AW43	MEM A CKE<1>	20 24 70
		SA_CKE2	AY42	MEM A CKE<2>	21 24 70
		SA_CKE3	AY43	MEM A CKE<3>	21 24 70
		SA_CS0*	AP33	MEM A CS L<0>	20 21 24 70
		SA_CS1*	AR32	MEM A CS L<1>	20 21 24 70
		SA_ODT0	AP32	MEM A ODT<0>	20 21 24 63 70
LPDDR3					
CAB3	SA_RAS*		AY34	=MEM A RAS L	63
CAB2	SA_WE*		AW34	=MEM A WE L	63
CAB1	SA_CAS*		AU34	=MEM A CAS L	63
CAB4	SA_BA0		AU35	=MEM A BA<0>	63
CAB6	SA_BA1		AV35	MEM A CAB<6>	21 24 63 70
CAA5	SA_BA2		AY41	=MEM A BA<2>	63
CAB9	SA_MA0		AU36	=MEM A A<0>	63
CAB8	SA_MA1		AY37	=MEM A A<1>	63
CAB5	SA_MA2		AR38	=MEM A A<2>	63
RSVD1	SA_MA3		AP36	TP_LPDDR3_RSVD1	63
RSVD2	SA_MA4		AU39	TP_LPDDR3_RSVD2	63
CAA0	SA_MA5		AR36	=MEM A A<5>	63
CAA2	SA_MA6		AV40	=MEM A A<6>	63
CAA4	SA_MA7		AW39	=MEM A A<7>	63
CAA3	SA_MA8		AY39	=MEM A A<8>	63
CAA1	SA_MA9		AU40	=MEM A A<9>	63
CAB7	SA_MA10		AP35	=MEM A A<10>	63
CAA7	SA_MA11		AW41	=MEM A A<11>	63
CAA6	SA_MA12		AU41	MEM A CAA<6>	20 24 63 70
CAB0	SA_MA13		AR35	=MEM A A<13>	63
CAA9	SA_MA14		AV42	=MEM A A<14>	63
CAA8	SA_MA15		AU42	=MEM A A<15>	63
		SA_DQSN0	AJ61	MEM A DQS N<0>	63 70
		SA_DQSN1	AN62	MEM A DQS N<1>	63 70
		SA_DQSN2	AM58	MEM A DQS N<2>	63 70
		SA_DQSN3	AM55	MEM A DQS N<3>	63 70
		SA_DQSN4	AV57	MEM A DQS N<4>	63 70
		SA_DQSN5	AV53	MEM A DQS N<5>	63 70
		SA_DQSN6	AL43	MEM A DQS N<6>	21 63 70
		SA_DQSN7	AL48	MEM A DQS N<7>	63 70
		SA_DQSP0	AJ62	MEM A DQS P<0>	63 70
		SA_DQSP1	AN61	MEM A DQS P<1>	63 70
		SA_DQSP2	AN58	MEM A DQS P<2>	63 70
		SA_DQSP3	AN55	MEM A DQS P<3>	63 70
		SA_DQSP4	AW57	MEM A DQS P<4>	63 70
		SA_DQSP5	AW53	MEM A DQS P<5>	63 70
		SA_DQSP6	AL42	MEM A DQS P<6>	21 63 70
		SA_DQSP7	AL49	MEM A DQS P<7>	63 70
		SM_VREF_CA	AP49	CPU_DIMM_VREFCA	19
		SM_VREF_DQ0	AR51	CPU_DIMMA_VREFDQ	19
		SM_VREF_DQ1	AP51	CPU_DIMMB_VREFDQ	19

CRITICAL
OMIT_TABLE

U0500
HASWELL-ULT
2C+GT2
BGA-TSP
SYM 4 OF 19

MEMORY CHANNEL B

MEM B DQ<0>	AY31	SB_DQ0			
MEM B DQ<1>	AW31	SB_DQ1			
MEM B DQ<2>	AY29	SB_DQ2			
MEM B DQ<3>	AW29	SB_DQ3			
MEM B DQ<4>	AV31	SB_DQ4			
MEM B DQ<5>	AU31	SB_DQ5			
MEM B DQ<6>	AV29	SB_DQ6			
MEM B DQ<7>	AU29	SB_DQ7			
MEM B DQ<8>	AY27	SB_DQ8			
MEM B DQ<9>	AW27	SB_DQ9			
MEM B DQ<10>	AY25	SB_DQ10			
MEM B DQ<11>	AW25	SB_DQ11			
MEM B DQ<12>	AV27	SB_DQ12			
MEM B DQ<13>	AU27	SB_DQ13			
MEM B DQ<14>	AV25	SB_DQ14			
MEM B DQ<15>	AU25	SB_DQ15			
MEM B DQ<16>	AM29	SB_DQ16			
MEM B DQ<17>	AK29	SB_DQ17			
MEM B DQ<18>	AL28	SB_DQ18			
MEM B DQ<19>	AK28	SB_DQ19			
MEM B DQ<20>	AR29	SB_DQ20			
MEM B DQ<21>	AN29	SB_DQ21			
MEM B DQ<22>	AR28	SB_DQ22			
MEM B DQ<23>	AP28	SB_DQ23			
MEM B DQ<24>	AN26	SB_DQ24			
MEM B DQ<25>	AR26	SB_DQ25			
MEM B DQ<26>	AR25	SB_DQ26			
MEM B DQ<27>	AP25	SB_DQ27			
MEM B DQ<28>	AK26	SB_DQ28			
MEM B DQ<29>	AM26	SB_DQ29			
MEM B DQ<30>	AK25	SB_DQ30			
MEM B DQ<31>	AL25	SB_DQ31			
MEM B DQ<32>	AY23	SB_DQ32			
MEM B DQ<33>	AW23	SB_DQ33			
MEM B DQ<34>	AY21	SB_DQ34			
MEM B DQ<35>	AW21	SB_DQ35			
MEM B DQ<36>	AV23	SB_DQ36			
MEM B DQ<37>	AU23	SB_DQ37			
MEM B DQ<38>	AV21	SB_DQ38			
MEM B DQ<39>	AU21	SB_DQ39			
MEM B DQ<40>	AY19	SB_DQ40			
MEM B DQ<41>	AW19	SB_DQ41			
MEM B DQ<42>	AY17	SB_DQ42			
MEM B DQ<43>	AW17	SB_DQ43			
MEM B DQ<44>	AV19	SB_DQ44			
MEM B DQ<45>	AU19	SB_DQ45			
MEM B DQ<46>	AV17	SB_DQ46			
MEM B DQ<47>	AU17	SB_DQ47			
MEM B DQ<48>	AR21	SB_DQ48			
MEM B DQ<49>	AR22	SB_DQ49			
MEM B DQ<50>	AL21	SB_DQ50			
MEM B DQ<51>	AM22	SB_DQ51			
MEM B DQ<52>	AN22	SB_DQ52			
MEM B DQ<53>	AP21	SB_DQ53			
MEM B DQ<54>	AK21	SB_DQ54			
MEM B DQ<55>	AK22	SB_DQ55			
MEM B DQ<56>	AN20	SB_DQ56			
MEM B DQ<57>	AR20	SB_DQ57			
MEM B DQ<58>	AK18	SB_DQ58			
MEM B DQ<59>	AL18	SB_DQ59			
MEM B DQ<60>	AK20	SB_DQ60			
MEM B DQ<61>	AM20	SB_DQ61			
MEM B DQ<62>	AR18	SB_DQ62			
MEM B DQ<63>	AP18	SB_DQ63			

		SB_CK0*	AM38	MEM B CLK N<0>	22 24 70
		SB_CK0	AN38	MEM B CLK P<0>	22 24 70
		SB_CK1*	AK38	MEM B CLK N<1>	23 24 70
		SB_CK1	AL38	MEM B CLK P<1>	23 24 70
		SB_CKE0	AY49	MEM B CKE<0>	22 24 70
		SB_CKE1	AU50	MEM B CKE<1>	22 24 70
		SB_CKE2	AW49	MEM B CKE<2>	23 24 70
		SB_CKE3	AV50	MEM B CKE<3>	23 24 70
		SB_CS0*	AM32	MEM B CS L<0>	22 23 24 70
		SB_CS1*	AK32	MEM B CS L<1>	22 23 24 70
		SB_ODT0	AL32	MEM B ODT<0>	22 23 24 63 70
LPDDR3					
CAB3	SB_RAS*		AM35	=MEM B RAS L	63
CAB2	SB_WE*		AK35	=MEM B WE L	63
CAB1	SB_CAS*		AM33	=MEM B CAS L	63
CAB4	SB_BA0		AL35	=MEM B BA<0>	63
CAB6	SB_BA1		AM36	MEM B CAB<6>	23 24 63 70
CAA5	SB_BA2		AU49	=MEM B BA<2>	63
CAB9	SB_MA0		AP40	=MEM B A<0>	63
CAB8	SB_MA1		AR40	=MEM B A<1>	63
CAB5	SB_MA2		AP42	=MEM B A<2>	63
RSVD3	SB_MA3		AR42	TP_LPDDR3_RSVD3	63
RSVD4	SB_MA4		AR45	TP_LPDDR3_RSVD4	63
CAA0	SB_MA5		AP45	=MEM B A<5>	63
CAA2	SB_MA6		AW46	=MEM B A<6>	63
CAA4	SB_MA7		AY46	=MEM B A<7>	63
CAA3	SB_MA8		AY47	=MEM B A<8>	63
CAA1	SB_MA9		AU46	=MEM B A<9>	63
CAB7	SB_MA10		AK36	=MEM B A<10>	63
CAA7	SB_MA11		AV47	=MEM B A<11>	63
CAA6	SB_MA12		AU47	MEM B CAA<6>	22 24 63 70
CAB0	SB_MA13		AK33	=MEM B A<13>	63
CAA9	SB_MA14		AR46	=MEM B A<14>	63
CAA8	SB_MA15		AP46	=MEM B A<15>	63
		SB_DQSN0	AW30	MEM B DQS N<0>	63 70
		SB_DQSN1	AV26	MEM B DQS N<1>	63 70
		SB_DQSN2	AN28	MEM B DQS N<2>	63 70
		SB_DQSN3	AN25	MEM B DQS N<3>	63 70
		SB_DQSN4	AW22	MEM B DQS N<4>	63 70
		SB_DQSN5	AV18	MEM B DQS N<5>	63 70
		SB_DQSN6	AN21	MEM B DQS N<6>	23 63 70
		SB_DQSN7	AN18	MEM B DQS N<7>	63 70
		SB_DQSP0	AV30	MEM B DQS P<0>	63 70
		SB_DQSP1	AW26	MEM B DQS P<1>	63 70
		SB_DQSP2	AM28	MEM B DQS P<2>	63 70
		SB_DQSP3	AM25	MEM B DQS P<3>	63 70
		SB_DQSP4	AV22	MEM B DQS P<4>	63 70
		SB_DQSP5	AW18	MEM B DQS P<5>	63 70
		SB_DQSP6	AM21	MEM B DQS P<6>	23 63 70
		SB_DQSP7	AM18	MEM B DQS P<7>	63 70

SYNC_MASTER=J41_MLB SYNC_DATE=02/06/2013

PAGE TITLE
CPU DDR3/LPDDR3 Interfaces

Apple Inc.

DRAWING NUMBER <SCH_NUM> SIZE D
REVISION <E4LABEL>
BRANCH <BRANCH>
PAGE 7 OF 121
SHEET 7 OF 76

NOTICE OF PROPRIETARY PROPERTY:
THE INFORMATION CONTAINED HEREIN IS THE PROPRIETARY PROPERTY OF APPLE INC.
THE POSESSOR AGREES TO THE FOLLOWING:
I TO MAINTAIN THIS DOCUMENT IN CONFIDENCE
II NOT TO REPRODUCE OR COPY IT
III NOT TO REVEAL OR PUBLISH IT IN WHOLE OR PART
IV ALL RIGHTS RESERVED

WWW.AliSaler.Com

HSW-ULT current estimates from Haswell Mobile ULT Processor EDS vol 1, doc #502406, v0.9.
LPT-LP current estimates from Lynx Point-LP PCH EDS, doc #503118, v1.0.
Note [1] current numbers from clarification email, from Srini, dated 9/10/2012 2:11pm.

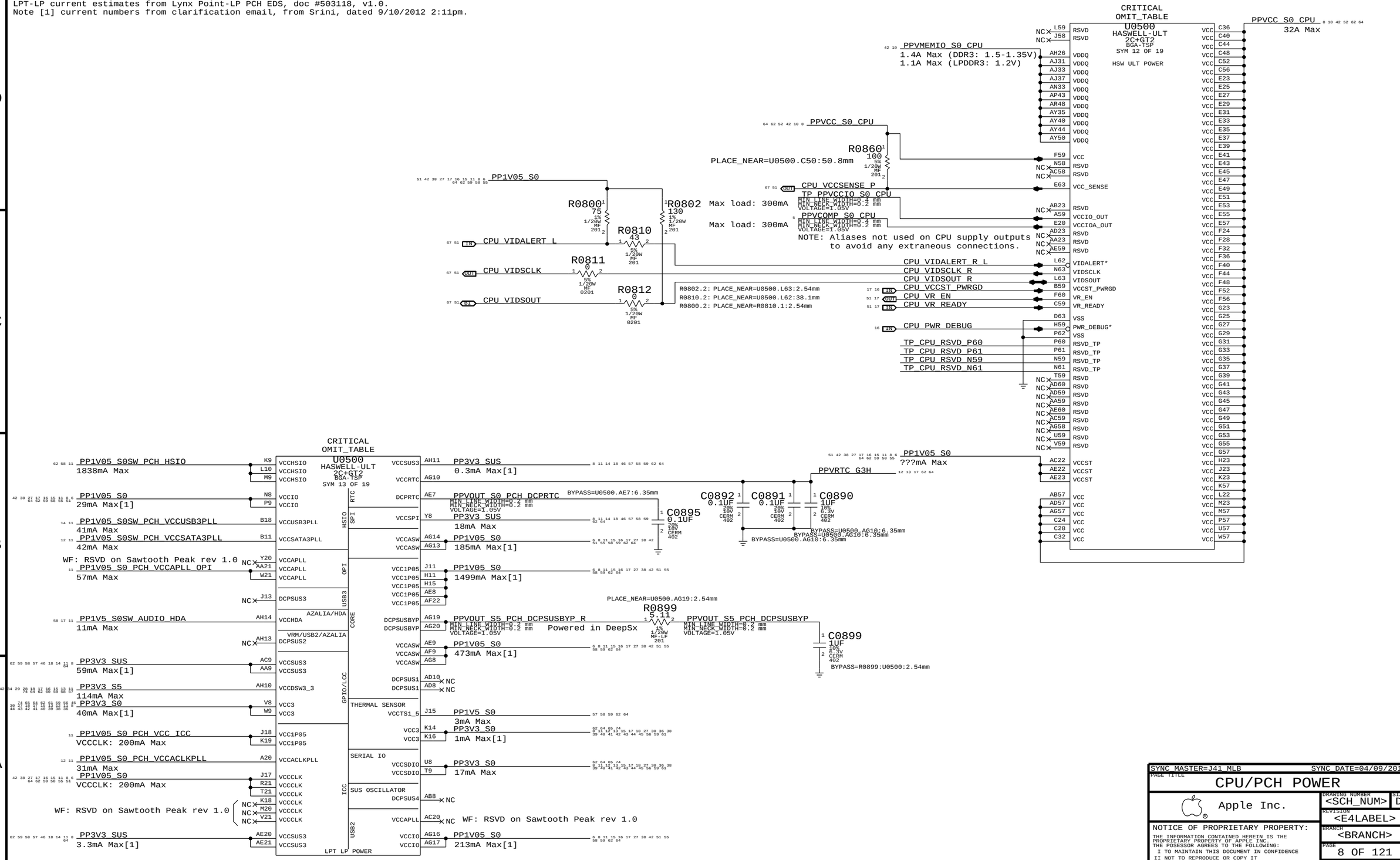

SYNC_MASTER=J41_MLB SYNC_DATE=04/09/2013

PAGE TITLE
CPU/PCH POWER

Apple Inc.

DRAWING NUMBER <SCH_NUM> SIZE D
REVISION <E4LABEL>
BRANCH <BRANCH>
PAGE 8 OF 121
SHEET 8 OF 76

NOTICE OF PROPRIETARY PROPERTY:
THE INFORMATION CONTAINED HEREIN IS THE PROPRIETARY PROPERTY OF APPLE INC.
THE POSESSOR AGREES TO THE FOLLOWING:
I TO MAINTAIN THIS DOCUMENT IN CONFIDENCE
II NOT TO REPRODUCE OR COPY IT
III NOT TO REVEAL OR PUBLISH IT IN WHOLE OR PART
IV ALL RIGHTS RESERVED

WWW.AliSaler.Com

CRITICAL
OMIT_TABLE

U0500
HASWELL-ULT
2C+GT2
BGA-TSP
SYM 14 OF 19

A11	VSS	VSS	AJ35
A14	VSS	VSS	AJ39
A18	VSS	VSS	AJ41
A24	VSS	VSS	AJ43
A28	VSS	VSS	AJ45
A32	VSS	VSS	AJ47
A36	VSS	VSS	AJ50
A40	VSS	VSS	AJ52
A44	VSS	VSS	AJ54
A48	VSS	VSS	AJ56
A52	VSS	VSS	AJ58
A56	VSS	VSS	AJ60
AA1	VSS	VSS	AJ63
AA58	VSS	VSS	AK23
AB10	VSS	VSS	AK3
AB20	VSS	VSS	AK52
AB22	VSS	VSS	AL10
AB7	VSS	VSS	AL13
AC61	VSS	VSS	AL17
AD21	VSS	VSS	AL20
AD3	VSS	VSS	AL22
AD63	VSS	VSS	AL23
AE10	VSS	VSS	AL26
AE5	VSS	VSS	AL29
AE58	VSS	VSS	AL31
AF11	VSS	VSS	AL33
AF12	VSS	VSS	AL36
AF14	VSS	VSS	AL39
AF15	VSS	VSS	AL40
AF17	VSS	VSS	AL45
AF18	VSS	VSS	AL46
AG1	VSS	VSS	AL51
AG11	VSS	VSS	AL52
AG21	VSS	VSS	AL54
AG23	VSS	VSS	AL57
AG60	VSS	VSS	AL60
AG61	VSS	VSS	AL61
AG62	VSS	VSS	AM1
AG63	VSS	VSS	AM17
AH17	VSS	VSS	AM23
AH19	VSS	VSS	AM31
AH20	VSS	VSS	AM52
AH22	VSS	VSS	AN17
AH24	VSS	VSS	AN23
AH28	VSS	VSS	AN31
AH30	VSS	VSS	AN32
AH32	VSS	VSS	AN35
AH34	VSS	VSS	AN36
AH36	VSS	VSS	AN39
AH38	VSS	VSS	AN40
AH40	VSS	VSS	AN42
AH42	VSS	VSS	AN43
AH44	VSS	VSS	AN45
AH49	VSS	VSS	AN46
AH51	VSS	VSS	AN48
AH53	VSS	VSS	AN49
AH55	VSS	VSS	AN51
AH57	VSS	VSS	AN52
AJ13	VSS	VSS	AN60
AJ14	VSS	VSS	AN63
AJ23	VSS	VSS	AN7
AJ25	VSS	VSS	AP10
AJ27	VSS	VSS	AP17
AJ29	VSS	VSS	AP20

CRITICAL
OMIT_TABLE

U0500
HASWELL-ULT
2C+GT2
BGA-TSP
SYM 15 OF 19

AP22	VSS	VSS	AV59
AP23	VSS	VSS	AV8
AP26	VSS	VSS	AW16
AP29	VSS	VSS	AW24
AP3	VSS	VSS	AW33
AP31	VSS	VSS	AW35
AP38	VSS	VSS	AW37
AP39	VSS	VSS	AW4
AP48	VSS	VSS	AW40
AP52	VSS	VSS	AW42
AP54	VSS	VSS	AW44
AP57	VSS	VSS	AW47
AR11	VSS	VSS	AW50
AR15	VSS	VSS	AW51
AR17	VSS	VSS	AW59
AR23	VSS	VSS	AW60
AR31	VSS	VSS	AY11
AR33	VSS	VSS	AY16
AR39	VSS	VSS	AY18
AR43	VSS	VSS	AY22
AR49	VSS	VSS	AY24
AR5	VSS	VSS	AY26
AR52	VSS	VSS	AY30
AT13	VSS	VSS	AY33
AT35	VSS	VSS	AY4
AT37	VSS	VSS	AY51
AT40	VSS	VSS	AY53
AT42	VSS	VSS	AY57
AT43	VSS	VSS	AY59
AT46	VSS	VSS	AY6
AT49	VSS	VSS	B20
AT61	VSS	VSS	B24
AT62	VSS	VSS	B26
AT63	VSS	VSS	B28
AU1	VSS	VSS	B32
AU16	VSS	VSS	B36
AU18	VSS	VSS	B4
AU20	VSS	VSS	B40
AU22	VSS	VSS	B44
AU24	VSS	VSS	B48
AU26	VSS	VSS	B52
AU28	VSS	VSS	B56
AU30	VSS	VSS	B60
AU33	VSS	VSS	C11
AU51	VSS	VSS	C14
AU53	VSS	VSS	C18
AU55	VSS	VSS	C20
AU57	VSS	VSS	C25
AU59	VSS	VSS	C27
AV14	VSS	VSS	C38
AV16	VSS	VSS	C39
AV20	VSS	VSS	C57
AV24	VSS	VSS	D12
AV28	VSS	VSS	D14
AV33	VSS	VSS	D18
AV34	VSS	VSS	D2
AV36	VSS	VSS	D21
AV39	VSS	VSS	D23
AV41	VSS	VSS	D25
AV43	VSS	VSS	D26
AV46	VSS	VSS	D27
AV49	VSS	VSS	D29
AV51	VSS	VSS	D30
AV55	VSS	VSS	D31

CRITICAL
OMIT_TABLE

U0500
HASWELL-ULT
2C+GT2
BGA-TSP
SYM 16 OF 19

D33	VSS	VSS	H17
D34	VSS	VSS	H57
D35	VSS	VSS	J10
D37	VSS	VSS	J22
D38	VSS	VSS	J59
D39	VSS	VSS	J63
D41	VSS	VSS	K1
D42	VSS	VSS	K12
D43	VSS	VSS	L13
D45	VSS	VSS	L15
D46	VSS	VSS	L17
D47	VSS	VSS	L18
D49	VSS	VSS	L20
D5	VSS	VSS	L58
D50	VSS	VSS	L61
D51	VSS	VSS	L7
D53	VSS	VSS	M22
D54	VSS	VSS	N10
D55	VSS	VSS	N3
D57	VSS	VSS	P59
D59	VSS	VSS	P63
D62	VSS	VSS	R10
D8	VSS	VSS	R22
E11	VSS	VSS	R8
E17	VSS	VSS	T1
F20	VSS	VSS	T58
F26	VSS	VSS	U20
F30	VSS	VSS	U22
F34	VSS	VSS	U61
F38	VSS	VSS	U9
F42	VSS	VSS	V10
F46	VSS	VSS	V3
F50	VSS	VSS	V7
F54	VSS	VSS	W20
F58	VSS	VSS	W22
F61	VSS	VSS	Y10
G18	VSS	VSS	Y59
G22	VSS	VSS	Y63
G3	VSS	VSS	V58
G5	VSS	VSS	AH46
G6	VSS	VSS	V23
G8	VSS	VSS	E62
H13	VSS	VSS_SENSE	AH16

CPU_VCCSENSE_N — OUT 51 67

R0960
100
5%
1/20W
MF
201

PLACE_NEAR=U0500.E62:50.8mm

SYNC_MASTER=J41_MLB SYNC_DATE=02/06/2013

PAGE TITLE
CPU/PCH GROUNDS

Apple Inc.

DRAWING NUMBER <SCH_NUM> SIZE D
REVISION <E4LABEL>
BRANCH <BRANCH>
PAGE 9 OF 121
SHEET 9 OF 76

NOTICE OF PROPRIETARY PROPERTY:
THE INFORMATION CONTAINED HEREIN IS THE PROPRIETARY PROPERTY OF APPLE INC.
THE POSESSOR AGREES TO THE FOLLOWING:
I TO MAINTAIN THIS DOCUMENT IN CONFIDENCE
II NOT TO REPRODUCE OR COPY IT
III NOT TO REVEAL OR PUBLISH IT IN WHOLE OR PART
IV ALL RIGHTS RESERVED

WWW.AliSaler.Com

All Intel recommendations from Intel doc #503160 Shark Bay Ultrabook P[redacted]n Power Delivery Design Guide Rev 1.0 unless stated otherwise

CPU VCC D[redacted]oupling

Intel recommendat[redacted] (Table 5-1): 23x 22uF 0805 stuff, 7x 22uF 0805 nostuff
Apple implementat[redacted] : 18x 10uF 0402 mirrored stuff, 1x 470uF stuff, 50x 10uF mirrored no stuff, 50x 10uF single sided no stuff

64 62 52 42 8 PPVCC_S0_CPU

CRITICAL C1000 10UF 20% 4V X6S 0402
CRI[redacted] C1[redacted] 10UF 20% 4V X6S 0402
[redacted] CRITICAL C1002 10UF 20% 4V X6S 0402
NO STUFF C1003 10UF 20% 4V X6S 0402
CRITICAL C1004 10UF 20% 4V X6S 0402
NO STUFF C1005 10UF 20% 4V X6S 0402
NO STUFF C1006 10UF 20% 4V X6S 0402
CRITICAL C1007 10UF 20% 4V X6S 0402
NO STUFF C1008 10UF 20% 4V X6S 0402
NO STUFF C1009 10UF 20% 4V X6S 0402
CRITICAL C1010 10UF 20% 4V X6S 0402
NO STUFF C1011 10UF 20% 4V X6S 0402
CRITICAL C1012 10UF 20% 4V X6S 0402
NO STUFF C1013 10UF 20% 4V X6S 0402
CRITICAL C1014 10UF 20% 4V X6S 0402
NO STUFF C105A 10UF 20% 4V X6S 0402
NO STUFF C105B 10UF 20% 4V X6S 0402
NO STUFF C105C 10UF 20% 4V X6S 0402
NO STUFF C105D 10UF 20% 4V X6S 0402
NO STUFF C105E 10UF 20% 4V X6S 0402
NO STUFF C105F 10UF 20% 4V X6S 0402

NO STUFF C1015 10UF 20% 4V X6S 0402
CRI[redacted] C1[redacted] 10UF 20% 4V X6S 0402
[redacted] CRITICAL C1017 10UF 20% 4V X6S 0402
CRITICAL C1018 10UF 20% 4V X6S 0402
NO STUFF C1019 10UF 20% 4V X6S 0402
NO STUFF C1020 10UF 20% 4V X6S 0402
CRITICAL C1021 10UF 20% 4V X6S 0402
NO STUFF C1030 10UF 20% 4V X6S 0402
NO STUFF C104A 10UF 20% 4V X6S 0402
NO STUFF C104B 10UF 20% 4V X6S 0402
NO STUFF C104C 10UF 20% 4V X6S 0402
NO STUFF C104D 10UF 20% 4V X6S 0402
NO STUFF C104E 10UF 20% 4V X6S 0402
NO STUFF C104F 10UF 20% 4V X6S 0402
NO STUFF C106A 10UF 20% 4V X6S 0402
NO STUFF C106B 10UF 20% 4V X6S 0402
NO STUFF C106C 10UF 20% 4V X6S 0402
NO STUFF C106D 10UF 20% 4V X6S 0402
NO STUFF C106E 10UF 20% 4V X6S 0402

NO STUFF C1070 10UF 20% 4V X6S 0402
NO [redacted] C1[redacted] 10UF 20% 4V X6S 0402
[redacted] NO STUFF C1072 10UF 20% 4V X6S 0402
NO STUFF C1073 10UF 20% 4V X6S 0402
NO STUFF C1074 10UF 20% 4V X6S 0402
NO STUFF C1075 10UF 20% 4V X6S 0402
CRITICAL C1076 10UF 20% 4V X6S 0402
CRITICAL C1077 10UF 20% 4V X6S 0402
NO STUFF C1078 10UF 20% 4V X6S 0402
NO STUFF C1079 10UF 20% 4V X6S 0402
NO STUFF C1080 10UF 20% 4V X6S 0402
NO STUFF C1081 10UF 20% 4V X6S 0402
NO STUFF C1082 10UF 20% 4V X6S 0402
CRITICAL C1083 10UF 20% 4V X6S 0402
CRITICAL C1084 10UF 20% 4V X6S 0402

NO STUFF C1085 10UF 20% 4V X6S 0402
NO [redacted] C1[redacted] 10UF 20% 4V X6S 0402
[redacted] NO STUFF C1087 10UF 20% 4V X6S 0402
CRITICAL C1088 10UF 20% 4V X6S 0402
CRITICAL C1089 10UF 20% 4V X6S 0402
NO STUFF C1090 10UF 20% 4V X6S 0402
NO STUFF C1091 10UF 20% 4V X6S 0402
NO STUFF C1092 10UF 20% 4V X6S 0402
NO STUFF C1093 10UF 20% 4V X6S 0402
NO STUFF C1094 10UF 20% 4V X6S 0402
NO STUFF C1095 10UF 20% 4V X6S 0402
NO STUFF C1096 10UF 20% 4V X6S 0402
NO STUFF C1097 10UF 20% 4V X6S 0402

NO STUFF C1022 10UF 20% 4V X6S 0402
NO [redacted] C1[redacted] 10UF 20% 4V X6S 0402
[redacted] NO STUFF C1024 10UF 20% 4V X6S 0402
NO STUFF C1025 10UF 20% 4V X6S 0402
NO STUFF C1026 10UF 20% 4V X6S 0402
NO STUFF C1027 10UF 20% 4V X6S 0402
NO STUFF C1028 10UF 20% 4V X6S 0402
NO STUFF C1029 10UF 20% 4V X6S 0402
NO STUFF C1032 10UF 20% 4V X6S 0402
NO STUFF C1033 10UF 20% 4V X6S 0402
NO STUFF C1034 10UF 20% 4V X6S 0402
NO STUFF C1035 10UF 20% 4V X6S 0402
NO STUFF C1036 10UF 20% 4V X6S 0402
NO STUFF C1037 10UF 20% 4V X6S 0402
NO STUFF C1038 10UF 20% 4V X6S 0402

NO STUFF C1039 10UF 20% 4V X6S 0402
NO [redacted] C1[redacted] 10UF 20% 4V X6S 0402
[redacted] NO STUFF C1045 10UF 20% 4V X6S 0402
NO STUFF C1046 10UF 20% 4V X6S 0402
NO STUFF C1047 10UF 20% 4V X6S 0402
NO STUFF C1048 10UF 20% 4V X6S 0402
NO STUFF C1049 10UF 20% 4V X6S 0402

NO STUFF C1056 10UF 20% 4V X6S 0402
NO [redacted] C1[redacted] 10UF 20% 4V X6S 0402
[redacted] NO STUFF C1058 10UF 20% 4V X6S 0402
NO STUFF C1059 10UF 20% 4V X6S 0402
NO STUFF C1062 10UF 20% 4V X6S 0402
NO STUFF C1063 10UF 20% 4V X6S 0402
NO STUFF C1064 10UF 20% 4V X6S 0402
NO STUFF C1065 10UF 20% 4V X6S 0402
NO STUFF C1066 10UF 20% 4V X6S 0402
NO STUFF C1067 10UF 20% 4V X6S 0402
NO STUFF C1068 10UF 20% 4V X6S 0402
NO STUFF C1069 10UF 20% 4V X6S 0402
NO STUFF C1098 10UF 20% 4V X6S 0402
NO STUFF C1099 10UF 20% 4V X6S 0402
NO STUFF C109A 10UF 20% 4V X6S 0402

NO STUFF C109B 10UF 20% 4V X6S 0402
NO [redacted] C1[redacted] 10UF 20% 4V X6S 0402
[redacted] NO STUFF C109D 10UF 20% 4V X6S 0402
NO STUFF C109E 10UF 20% 4V X6S 0402
NO STUFF C109F 10UF 20% 4V X6S 0402
NO STUFF C108A 10UF 20% 4V X6S 0402
NO STUFF C108B 10UF 20% 4V X6S 0402
NO STUFF C108C 10UF 20% 4V X6S 0402
NO STUFF C108D 10UF 20% 4V X6S 0402
NO STUFF C108E 10UF 20% 4V X6S 0402
NO STUFF C108F 10UF 20% 4V X6S 0402
NO STUFF C107A 10UF 20% 4V X6S 0402
NO STUFF C107B 10UF 20% 4V X6S 0402

CRITICAL C1031 470UF-0.0045OH 20% 2.5V POLY-TANT SM

CPU VDDQ D[redacted]OUPLING

Intel recommendat[redacted] Table 5-4): 4x 2.2uF 0402, 6x 10uF 0603
Apple implementat[redacted] : 4x 2.2uF 0402, 6x 10uF 0402, 2x 270uF B2 no stuff

42 8 PPVMEMIO_S0_CPU

C1040 2.2UF 20% 6.3V CERM 402-LF
C10[redacted] 2.2U[redacted] 20% 6.3V CERM 402-LF
[redacted] C1042 2.2UF 20% 6.3V CERM 402-LF
C1043 2.2UF 20% 6.3V CERM 402-LF

C1050 10UF 20% 6.3V CERM-X5R 0402-1
C1051 10UF 20% 6.3V CERM-X5R 0402-1
C1052 10UF 20% 6.3V CERM-X5R 0402-1
C1053 10UF 20% 6.3V CERM-X5R 0402-1
C1054 10UF 20% 6.3V CERM-X5R 0402-1
C1055 10UF 20% 6.3V CERM-X5R 0402-1

C1060 270UF 20% 2V TANT CASE-B2-SM
NO STUFF C1061 270UF 20% 2V TANT CASE-B2-SM

2x Bulk nostuff per Harris Beach v1.0 schematic

SYNC_MASTER=WILL_J43 SYNC_DATE=01/08/2013
PAGE TITLE: CPU Decoupling
Apple Inc.
DRAWING NUMBER: <SCH_NUM> SIZE: D
REVISION: <E4LABEL>
BRANCH: <BRANCH>
PAGE: 10 OF 121
SHEET: 10 OF 76

NOTICE OF PROPRIETARY PROPERTY:
THE INFORMATION CONTAINED HEREIN IS THE PROPRIETARY PROPERTY OF APPLE INC.
THE POSESSOR AGREES TO THE FOLLOWING:
I TO MAINTAIN THIS DOCUMENT IN CONFIDENCE
II NOT TO REPRODUCE OR COPY IT
III NOT TO REVEAL OR PUBLISH IT IN WHOLE OR PART
IV ALL RIGHTS RESERVED

WWW.AliSaler.Com

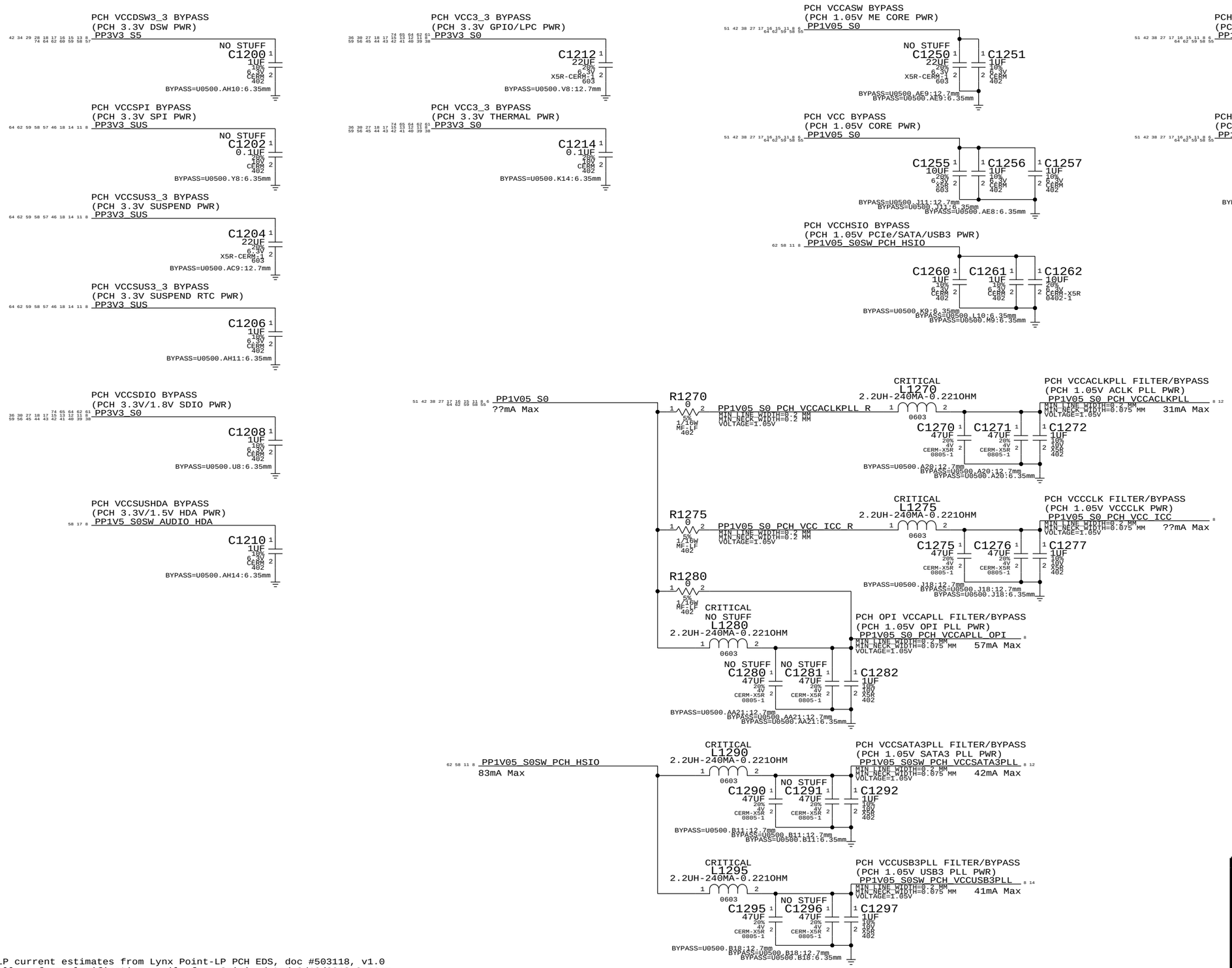

LPT-LP current estimates from Lynx Point-LP PCH EDS, doc #503118, v1.0
as well as from clarification email, from Srini, dated 9/10/2012 2:11pm.

SYNC_MASTER=J41_MLB SYNC_DATE=02/07/2013

PAGE TITLE
PCH Decoupling

Apple Inc.

DRAWING NUMBER <SCH_NUM> SIZE D
REVISION <E4LABEL>
BRANCH <BRANCH>
PAGE 12 OF 121
SHEET 11 OF 76

NOTICE OF PROPRIETARY PROPERTY:
THE INFORMATION CONTAINED HEREIN IS THE PROPRIETARY PROPERTY OF APPLE INC.
THE POSESSOR AGREES TO THE FOLLOWING:
I TO MAINTAIN THIS DOCUMENT IN CONFIDENCE
II NOT TO REPRODUCE OR COPY IT
III NOT TO REVEAL OR PUBLISH IT IN WHOLE OR PART
IV ALL RIGHTS RESERVED

WWW.AliSaler.Com

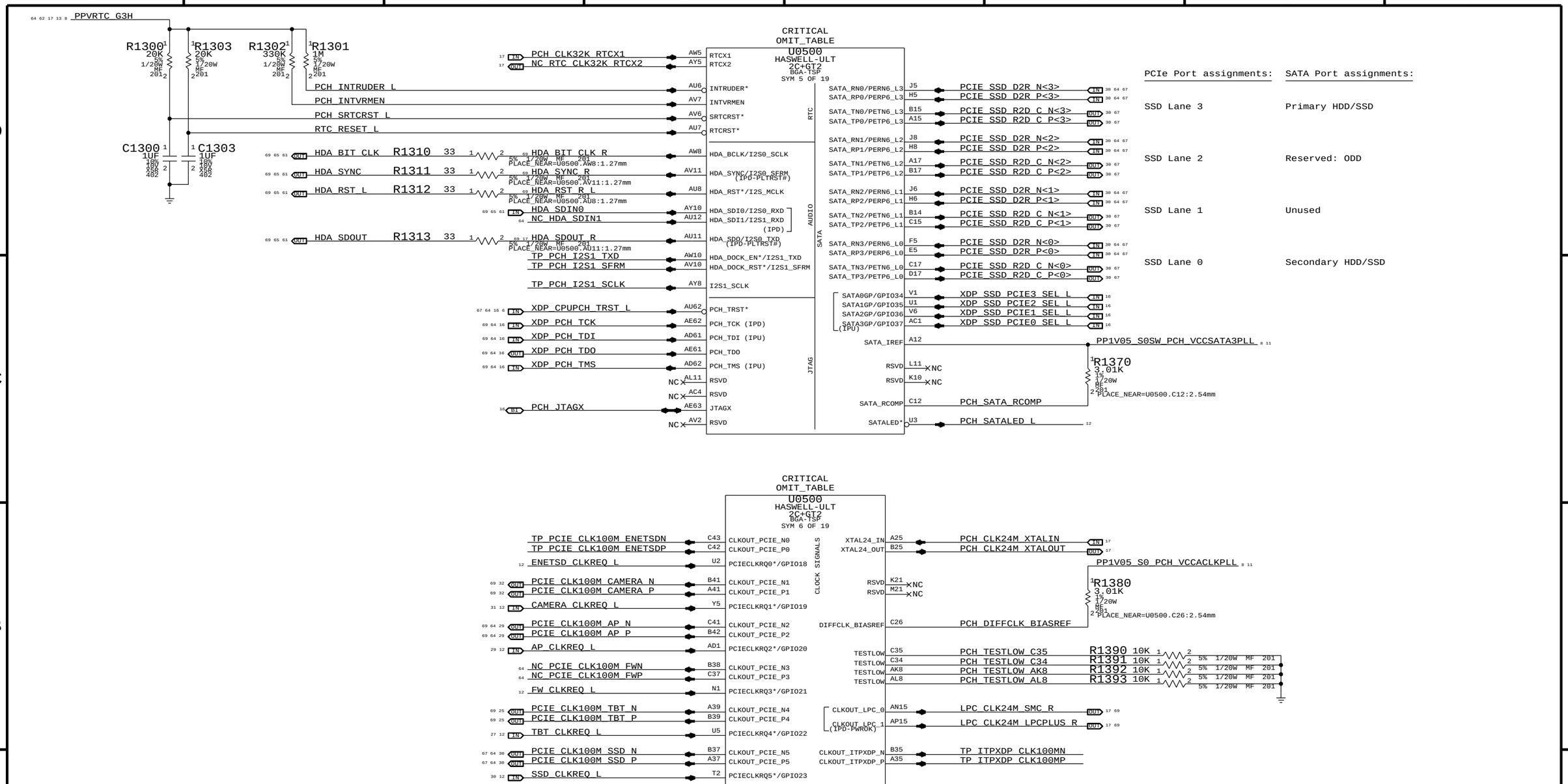

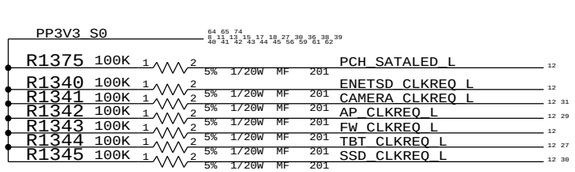

SYNC_MASTER=J41_MLB SYNC_DATE=02/06/2013

PAGE TITLE
PCH Audio/JTAG/SATA/CLK

Apple Inc.

DRAWING NUMBER <SCH_NUM> SIZE D

REVISION <E4LABEL>

BRANCH <BRANCH>

PAGE 13 OF 121

SHEET 12 OF 76

NOTICE OF PROPRIETARY PROPERTY:
THE INFORMATION CONTAINED HEREIN IS THE PROPRIETARY PROPERTY OF APPLE INC.
THE POSESSOR AGREES TO THE FOLLOWING:
I TO MAINTAIN THIS DOCUMENT IN CONFIDENCE
II NOT TO REPRODUCE OR COPY IT
III NOT TO REVEAL OR PUBLISH IT IN WHOLE OR PART
IV ALL RIGHTS RESERVED

WWW.AliSaler.Com

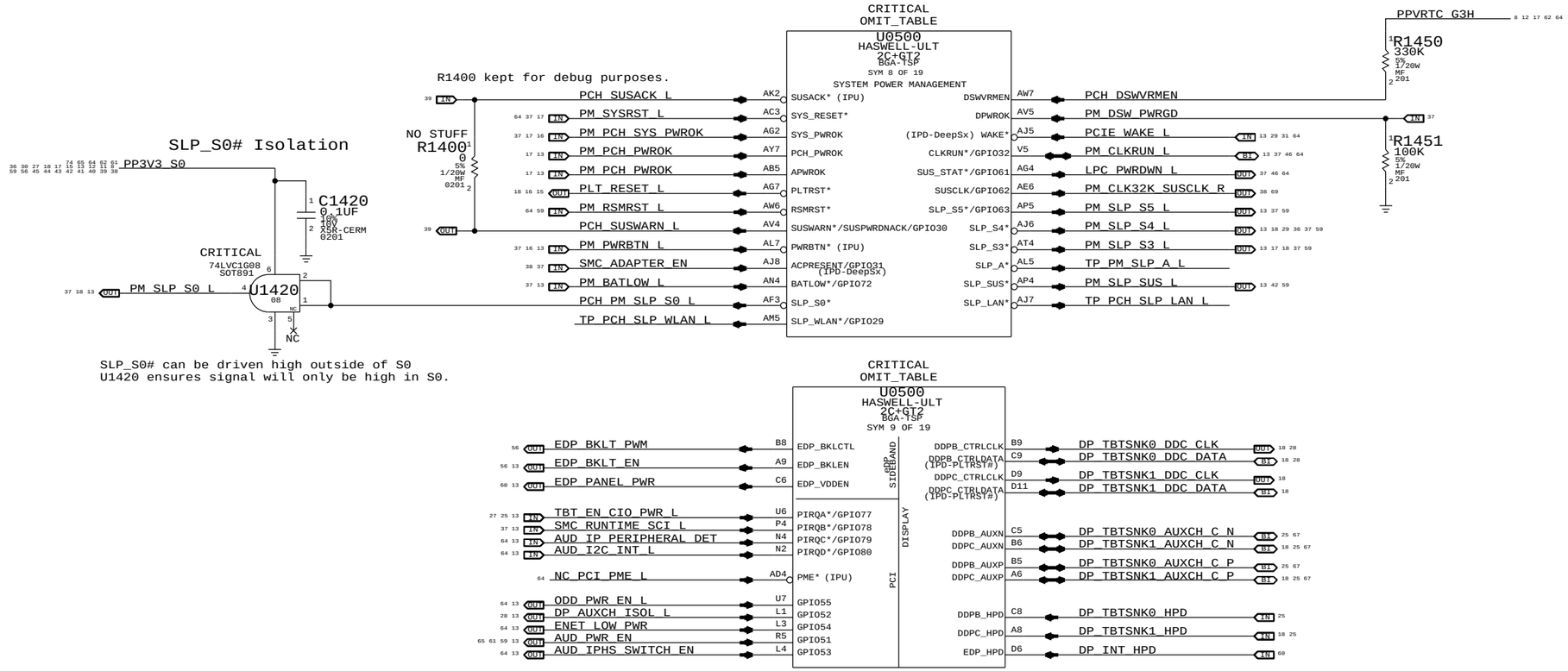

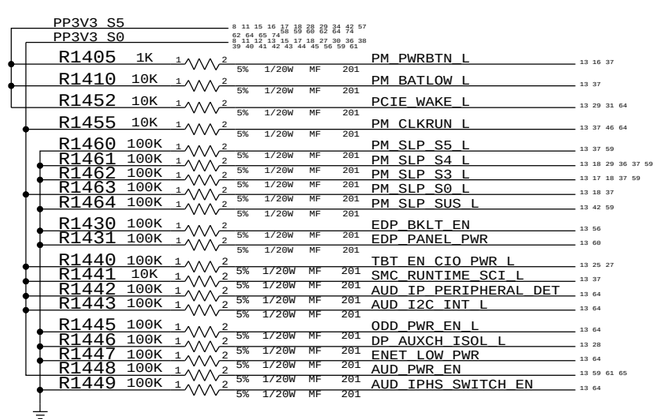

SYNC_MASTER=J41_MLB SYNC_DATE=02/06/2013

PAGE TITLE: PCH PM/PCI/GFX

Apple Inc.

DRAWING NUMBER: <SCH_NUM> SIZE: D

REVISION: <E4LABEL>

BRANCH: <BRANCH>

PAGE: 14 OF 121

SHEET: 13 OF 76

NOTICE OF PROPRIETARY PROPERTY:
THE INFORMATION CONTAINED HEREIN IS THE PROPRIETARY PROPERTY OF APPLE INC.
THE POSESSOR AGREES TO THE FOLLOWING:
I TO MAINTAIN THIS DOCUMENT IN CONFIDENCE
II NOT TO REPRODUCE OR COPY IT
III NOT TO REVEAL OR PUBLISH IT IN WHOLE OR PART
IV ALL RIGHTS RESERVED

WWW.AliSaler.Com

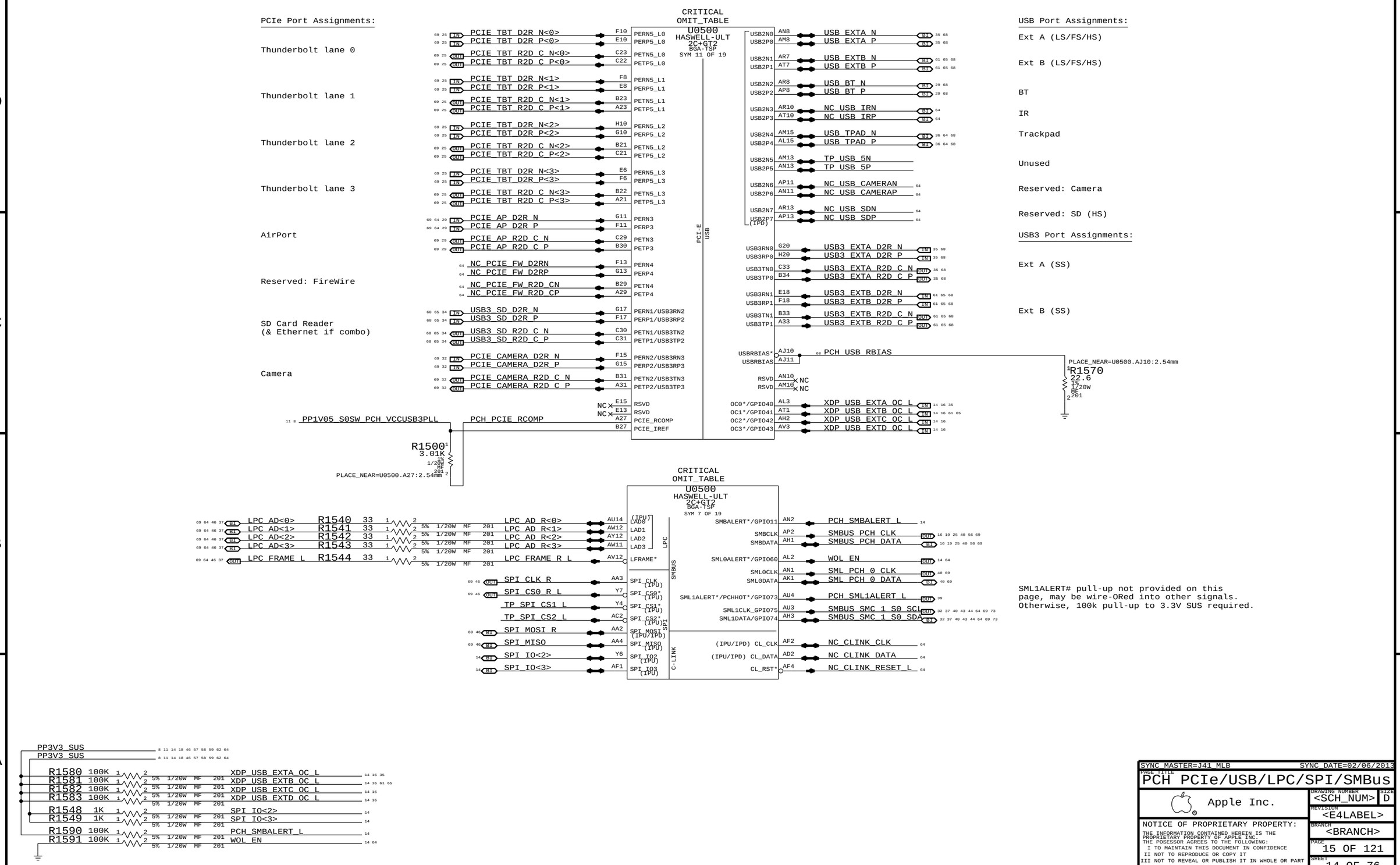

SYNC_MASTER=J41_MLB SYNC_DATE=02/06/2013

PAGE TITLE
PCH PCIe/USB/LPC/SPI/SMBus

Apple Inc.

DRAWING NUMBER <SCH_NUM> SIZE D

REVISION <E4LABEL>

BRANCH <BRANCH>

PAGE 15 OF 121

SHEET 14 OF 76

NOTICE OF PROPRIETARY PROPERTY:
THE INFORMATION CONTAINED HEREIN IS THE PROPRIETARY PROPERTY OF APPLE INC.
THE POSESSOR AGREES TO THE FOLLOWING:
I TO MAINTAIN THIS DOCUMENT IN CONFIDENCE
II NOT TO REPRODUCE OR COPY IT
III NOT TO REVEAL OR PUBLISH IT IN WHOLE OR PART
IV ALL RIGHTS RESERVED

WWW.AliSaler.Com

BOM GROUP	BOM OPTIONS
RAMCFG_SLOT	RAMCFG3:H,RAMCFG2:H,RAMCFG1:H,RAMCFG0:H

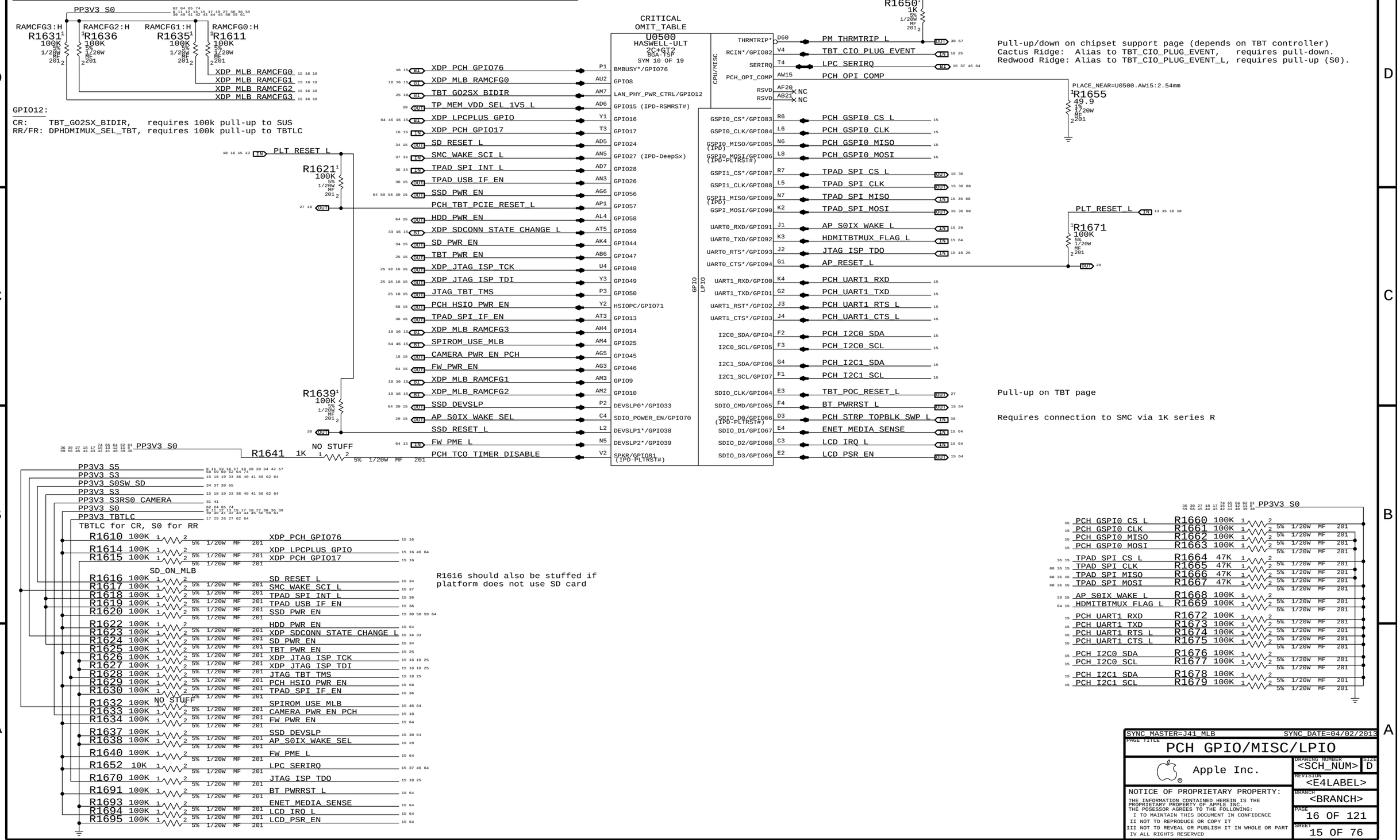

SYNC MASTER=J41 MLB SYNC DATE=04/02/2013

PAGE TITLE
PCH GPIO/MISC/LPIO

Apple Inc.

DRAWING NUMBER <SCH_NUM> SIZE D
REVISION <E4LABEL>
BRANCH <BRANCH>
PAGE 16 OF 121
SHEET 15 OF 76

NOTICE OF PROPRIETARY PROPERTY:
THE INFORMATION CONTAINED HEREIN IS THE PROPRIETARY PROPERTY OF APPLE INC.
THE POSESSOR AGREES TO THE FOLLOWING:
I TO MAINTAIN THIS DOCUMENT IN CONFIDENCE
II NOT TO REPRODUCE OR COPY IT
III NOT TO REVEAL OR PUBLISH IT IN WHOLE OR PART
IV ALL RIGHTS RESERVED

WWW.AliSaler.Com

Merged (CPU/PCH) Micro2-XDP

Extra BPM Testpoints

XDP_BPM_L<2> — TP1802
XDP_BPM_L<3> — TP1803
XDP_BPM_L<4> — TP1804
XDP_BPM_L<5> — TP1805
XDP_BPM_L<6> — TP1806
XDP_BPM_L<7> — TP1807

PP1V05_S0

CRITICAL
XDP_CONN
J1800
DF40RC-60DP-0.4V
M-ST-SM1

NOTE: This is not the standard XDP pinout.
Use with 921-0133 Adapter Flex to
support chipset debug.

R1830 150 5% 1/16W MF-LF 402

Signal	Pin	Pin	Signal
XDP_CPU_PREQ_L	OBSFN_A0	OBSFN_C0	CPU_CFG<17>
XDP_CPU_PRDY_L	OBSFN_A1	OBSFN_C1	CPU_CFG<16>
CPU_CFG<0>	OBSDATA_A0	OBSDATA_C0	CPU_CFG<8>
CPU_CFG<1>	OBSDATA_A1	OBSDATA_C1	CPU_CFG<9>
CPU_CFG<2>	OBSDATA_A2	OBSDATA_C2	CPU_CFG<10>
CPU_CFG<3>	OBSDATA_A3	OBSDATA_C3	CPU_CFG<11>
XDP_BPM_L<0>	OBSFN_B0	OBSFN_D0	CPU_CFG<19>
XDP_BPM_L<1>	OBSFN_B1	OBSFN_D1	CPU_CFG<18>
CPU_CFG<4>	OBSDATA_B0	OBSDATA_D0	CPU_CFG<12>
CPU_CFG<5>	OBSDATA_B1	OBSDATA_D1	CPU_CFG<13>
CPU_CFG<6>	OBSDATA_B2	OBSDATA_D2	CPU_CFG<14>
CPU_CFG<7>	OBSDATA_B3	OBSDATA_D3	CPU_CFG<15>
XDP_CPU_VCCST_PWRGD	PWRGD/HOOK0	ITPCLK/HOOK4	NC
XDP_CPU_PWRBTN_L	HOOK1	ITPCLK#/HOOK5	NC
	VCC_OBS_AB	VCC_OBS_CD	
CPU_PWR_DEBUG	HOOK2	RESET#/HOOK6	XDP_CPURST_L
XDP_SYS_PWROK	HOOK3	DBR#/HOOK7	XDP_DBRESET_L
SMBUS_PCH_DATA	SDA	TDO	XDP_PCH_TDO
SMBUS_PCH_CLK	SCL	TRSTn	XDP_TRST_L
XDP_PCH_TCK	TCK1	TDI	XDP_PCH_TDI
	TCK0	TMS	XDP_PCH_TMS
		XDP_PRESENT#	

518S0847

XDP_CPU_PRESENT_L

NOTE: XDP_DBRESET_L pulled-up to 3.3V on PCH Support Page

XDP_CPU_TDO — R1810 51 5% 1/20W MF 201 — PLACE_NEAR=U0500.F62:28mm
XDP_CPU_TCK — R1813 51 5% 1/20W MF 201 — PLACE_NEAR=U0500.E60:28mm

TDI and TMS are terminated in CPU.

CPU_VCCST_PWRGD — R1800 1K 5% 1/20W MF 201 — PLACE_NEAR=U0500.C61:2.54mm
PM_PWRBTN_L — R1802 0 5% 1/20W MF 0201 — PLACE_NEAR=U5000.J3:2.54mm
PM_PCH_SYS_PWROK — R1804 0 5% 1/16W MF-LF 402
XDP_CPU_TCK
PCH_JTAGX — R1835 0 5% 1/20W MF 0201 — PLACE_NEAR=J1800.58:28mm

R1805 1K 5% 1/20W MF 201 — PLT_RESET_L — PLACE_NEAR=U0500.AG7:2.54mm

C1804 0.1UF 10% 6.3V CERM-X5R 0201
R1831 1K 5% 1/16W MF-LF 402
C1800 0.1UF 10% 6.3V CERM-X5R 0201
C1801 0.1UF 10% 6.3V CERM-X5R 0201
C1806 0.1UF 10% 6.3V CERM-X5R 0201

CRITICAL XDP Q1840 DMN5L06VK-7 SOT-563 — PLACE_NEAR=J1800.51:28mm — XDP_CPU_TDO
CRITICAL XDP Q1840 DMN5L06VK-7 SOT-563 — PLACE_NEAR=J1800.53:28mm — XDP_CPUPCH_TRST_L (MAKE_BASE=TRUE) — XDP_CPUPCH_TRST_L — XDP_CPUPCH_TRST_L
CRITICAL XDP Q1842 DMN5L06VK-7 SOT-563 — PLACE_NEAR=J1800.55:28mm — XDP_CPU_TDI
CRITICAL XDP Q1842 DMN5L06VK-7 SOT-563 — PLACE_NEAR=J1800.57:28mm — XDP_CPU_TMS

PCH XDP Signals

These signals do not connect to XDP connector in this architecture, only accessible via Top-Side Probe. Nets are listed here to show XDP associations and to make clear what restrictions exist on PCH GPIOs when Top-Side Probe is used for PCH debug.

PCH/XDP Signals		Non-XDP Signals
XDP_MLB_RAMCFG0	TP1870	
XDP_USB_EXTA_OC_L	MAKE_BASE=TRUE	XDP_USB_EXTA_OC_L
XDP_USB_EXTB_OC_L	MAKE_BASE=TRUE	XDP_USB_EXTB_OC_L
XDP_USB_EXTC_OC_L	TP1873	
XDP_USB_EXTD_OC_L	TP1874	
XDP_SDCONN_STATE_CHANGE_L	MAKE_BASE=TRUE	XDP_SDCONN_STATE_CHANGE_L
XDP_MLB_RAMCFG1	TP1876	
XDP_MLB_RAMCFG2	TP1877	
XDP_MLB_RAMCFG3	TP1878	
XDP_JTAG_ISP_TCK	MAKE_BASE=TRUE	XDP_JTAG_ISP_TCK
XDP_SSD_PCIE3_SEL_L	R1881 1K 5% 1/20W MF 201	
XDP_SSD_PCIE2_SEL_L	R1882 1K 5% 1/20W MF 201	NOTE: Must not short XDP pins together!
XDP_SSD_PCIE1_SEL_L	R1883 1K 5% 1/20W MF 201	
XDP_SSD_PCIE0_SEL_L	R1884 1K 5% 1/20W MF 201	SSD_PCIE_SEL_L
XDP_LPCPLUS_GPIO	MAKE_BASE=TRUE	XDP_LPCPLUS_GPIO
XDP_PCH_GPIO17	TP1886	
XDP_PCH_GPIO76	TP1887	
XDP_JTAG_ISP_TDI	MAKE_BASE=TRUE	XDP_JTAG_ISP_TDI

Unused & MLB_RAMCFGx GPIOs have TPs.
USB Overcurrents are aliased, do not cause USB OC# events during PCH debug.
SDCONN_STATE_CHANGE_L is aliased, do not plug/unplug SD Cards during PCH debug.
JTAG_ISP (non-TMS) nets are aliased, do not attempt bit-banged JTAG during PCH debug.
NOTE: Should force PCH GPIO47 high to ensure TBT router powered to avoid leakage/clamping of signals.
SSD_PCIEx_SEL_L straps are connected via 1K to common net.
LPCPLUS_GPIO is aliased, do not attempt use during PCH debug.

CPU JTAG Isolation

PP5V_S0
PP3V3_S5
C1845 0.1UF 10% 10V X5R-CERM 0201
U1845 74LVC1G07GF SOT891 (VCC, GND)
R1845 330K 5% 1/20W MF 201
ALL_SYS_PWRGD
XDP_JTAG_CPU_ISOL_L

PP1V05_SUS

PCH_JTAGX	R1899 1K	NO STUFF
XDP_PCH_TDO	R1890 51	XDP
XDP_PCH_TDI	R1891 51	XDP
XDP_PCH_TMS	R1892 51	XDP
XDP_PCH_TCK	R1896 51	NO STUFF
XDP_CPUPCH_TRST	R1897 51	NO STUFF

5% 1/20W MF 201 — PLACE_NEAR=U0500.AE63:28mm / AE61:28mm / AD61:28mm / AD62:28mm / AE62:28mm / AG62:28mm

SYNC_MASTER=J41_MLB SYNC_DATE=02/06/2013

PAGE TITLE: CPU/PCH Merged XDP

Apple Inc.

DRAWING NUMBER: <SCH_NUM> SIZE: D
REVISION: <E4LABEL>
BRANCH: <BRANCH>
PAGE: 18 OF 121
SHEET: 16 OF 76

NOTICE OF PROPRIETARY PROPERTY:
THE INFORMATION CONTAINED HEREIN IS THE PROPRIETARY PROPERTY OF APPLE INC.
THE POSESSOR AGREES TO THE FOLLOWING:
I TO MAINTAIN THIS DOCUMENT IN CONFIDENCE
II NOT TO REPRODUCE OR COPY IT
III NOT TO REVEAL OR PUBLISH IT IN WHOLE OR PART
IV ALL RIGHTS RESERVED

WWW.AliSaler.Com

System RTC Power Source & 32kHz / 25MHz Clock Generator

Chipset uses 24MHz crystal, GreenCLK kept to save 1x 25MHz crystal & 1x 32kHz crystal

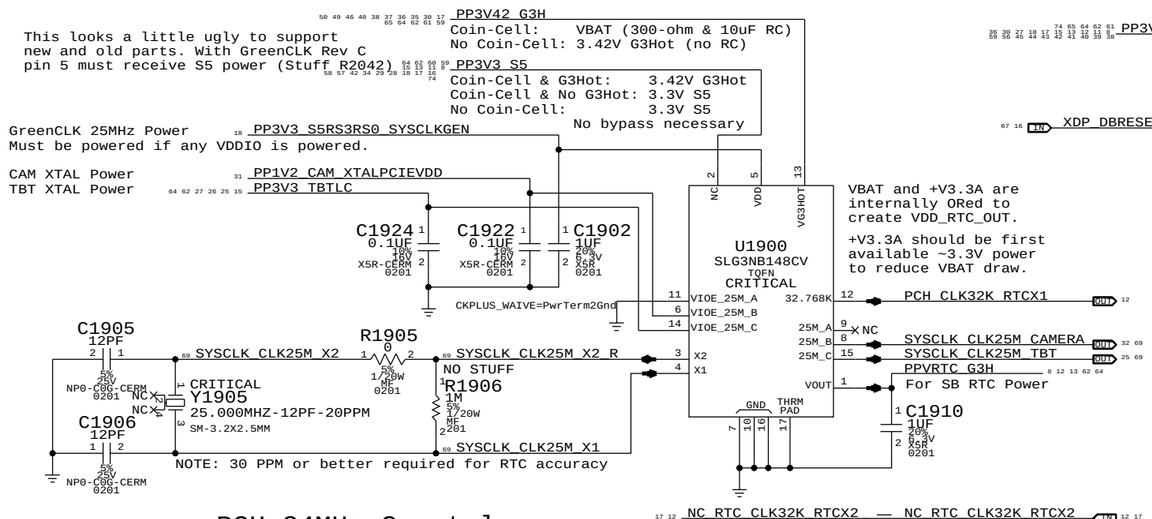

PCH Reset Button

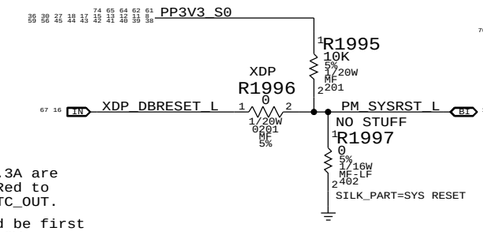

Memory VTT Enable Level-Shifter

CPU output is on VDDQ rail (1.2V), TPS51916 has 1.8V Vih(min).

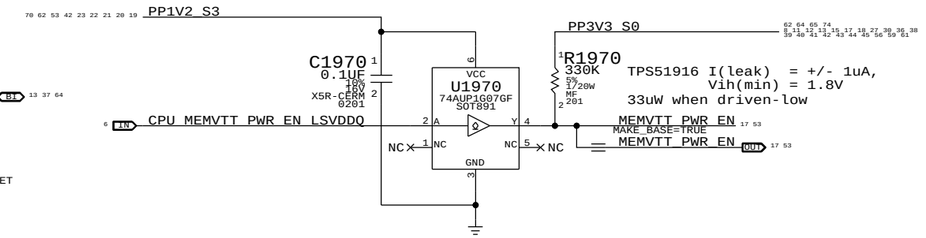

PCH ME Disable Strap

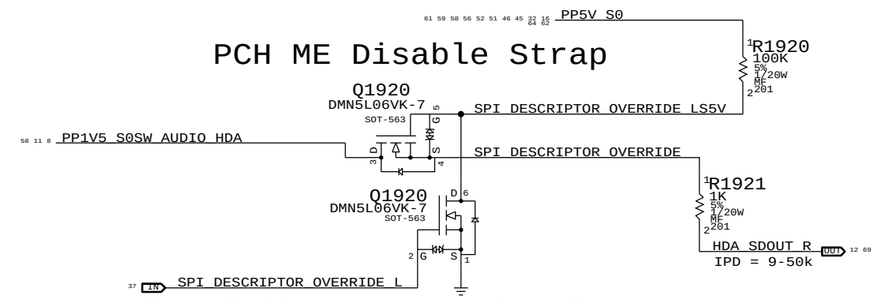

PCH uses HDA_SDO as a power-up strap. If low, ME functions normally.
If high, ME is disabled. This allows for full re-flashing of SPI ROM.
SMC controls strap enable to allow in-field control of strap setting.
Q1920 & 5V pull-up allows circuit to work regardless of HDA voltage.

PCH 24MHz Crystal

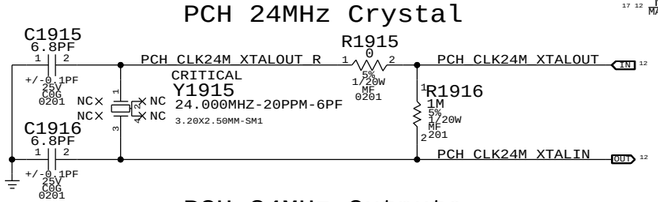

VCCST (1.05V S0) PWRGD

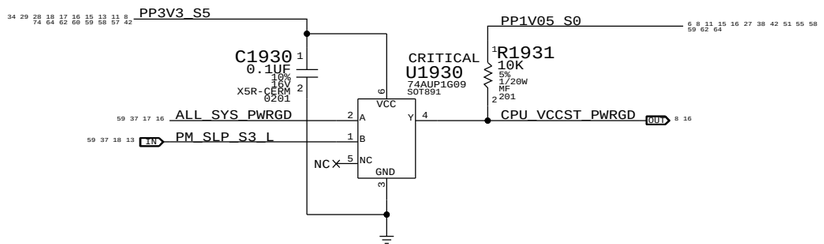

PCH 24MHz Outputs

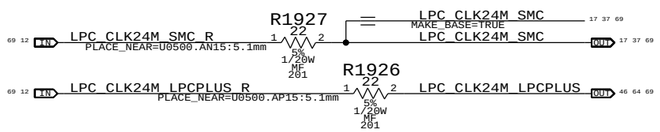

PCH PWROK Generation

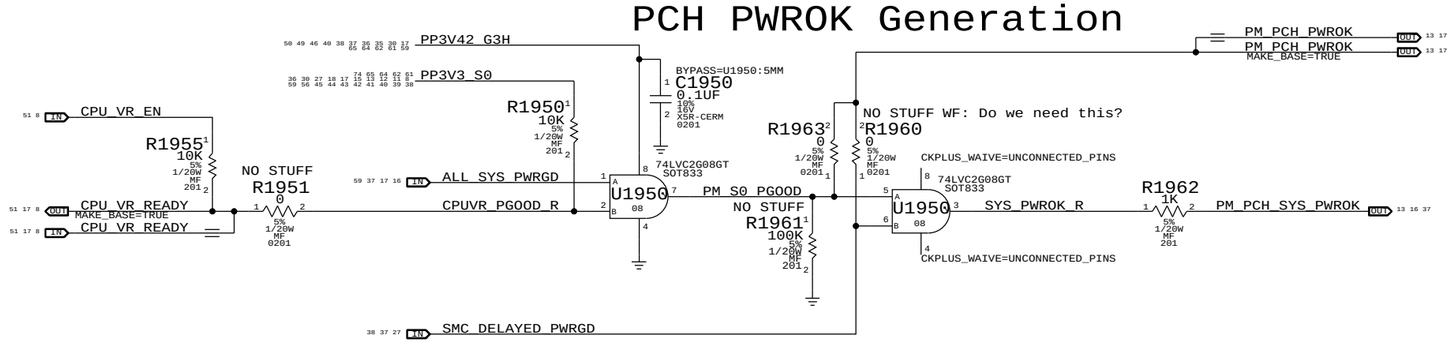

SYNC_MASTER=J41_MLB	SYNC_DATE=02/06/2013
PAGE TITLE: Chipset Support	
Apple Inc.	DRAWING NUMBER: <SCH_NUM> SIZE: D
	REVISION: <E4LABEL>
NOTICE OF PROPRIETARY PROPERTY: THE INFORMATION CONTAINED HEREIN IS THE PROPRIETARY PROPERTY OF APPLE INC. THE POSESSOR AGREES TO THE FOLLOWING: I TO MAINTAIN THIS DOCUMENT IN CONFIDENCE II NOT TO REPRODUCE OR COPY IT III NOT TO REVEAL OR PUBLISH IT IN WHOLE OR PART IV ALL RIGHTS RESERVED	BRANCH: <BRANCH>
	PAGE: 19 OF 121
	SHEET: 17 OF 76

WWW.AliSaler.Com

Platform Reset Connections

Unbuffered

PLT_RESET_L → R2081 33 5% 1/20W MF 201 → LPCPLUS_RESET_L
PLT_RESET_L → R2071 0 5% 1/20W MF 0201 → PCA9557D_RESET_L

Scrub for Layout Optimization

Buffered

PP3V3_S0 → C2071 0.1UF 10% 16V X5R-CERM 0201
PP3V3_S0 → U2071 CRITICAL MC74VHC1G08 SC70-HF
PLT_RST_BUF_L → R2070 100K 5% 1/20W MF 201
PLT_RST_BUF_L → R2072 0 5% 1/20W MF 0201 → SMC_LRESET_L
PLT_RST_BUF_L → R2088 0 5% 1/20W MF 0201 → BKLT_PLT_RST_L
PLT_RST_BUF_L → R2089 0 5% 1/20W MF 0201 → CAM_PCIE_RESET_L

PCH_TBT_PCIE_RESET_L (MAKE_BASE=TRUE) — PCH_TBT_PCIE_RESET_L

GreenCLK 25MHz Power

PP3V3_S3 → NO STUFF R2040 0 5% 1/20W MF 0201 → PP3V3_S5RS3RS0_SYSCLKGEN
PP3V3_S5RS3RS0_SYSCLKGEN (MIN_LINE_WIDTH=0.5 MM, MIN_NECK_WIDTH=0.2 MM, VOLTAGE=3V, MAKE_BASE=TRUE)
PP3V3_S0 → NO STUFF R2041 0 5% 1/20W MF 0201
PP3V3_S5 → R2042 0 5% 1/20W MF 0201

R2041/2 should be stuffed for GreekCLK A or B depending on S2 rail

R2042 should be stuffed for GreenCLK C

DDC Pull-Ups

2.2k pull-ups are required by PCH to indicate active display interface.

DP++ spec violation, should remove!

PP3V3_S0 → NO STUFF R2020 2.2K 5% 1/20W MF 201; R2021 2.2K 5% 1/20W MF 201; NO STUFF R2022 2.2K 5% 1/20W MF 201; R2023 2.2K 5% 1/20W MF 201

DP_TBTSNK0_DDC_CLK
DP_TBTSNK0_DDC_DATA
DP_TBTSNK1_DDC_CLK
DP_TBTSNK1_DDC_DATA

TBTSNK1_DDC is pulled-up just to indicate that DP port is used. No DDC on this port, AUX-only.

NOTE: Only DDC_DATA is sensed by PCH, so DDC_CLK pull-ups are unstuffed.

Thunderbolt Pull-up/downs

Cactus Ridge GO2SX signal pulled-up to SUS rail

PP3V3_SUS → R2013 10K 5% 1/20W MF 201

TBT_GO2SX_BIDIR — (MAKE_BASE TRUE) — TBT_GO2SX_BIDIR

Cactus Ridge PLUG_EVENT is active-high, always driven (pull-down)

TBT_CIO_PLUG_EVENT — (TRUE) — TBT_CIO_PLUG_EVENT

Required for unused second TBT port

TBT_B_CIO_SEL
DP_TBTPB_HPD
TBT_B_CONFIG2_RC
TBT_B_CONFIG1_BUF
TBT_B_LSRX

R2015 100K 5% 1/20W MF 201
R2016 10K 5% 1/20W MF 201; R2017 10K 5% 1/20W MF 201; R2018 10K 5% 1/20W MF 201; R2019 10K 5% 1/20W MF 201; R2014 10K 5% 1/20W MF 201

PP3V3_S5 → NOSTUFF C2030 0.1UF 10% 16V X5R-CERM 0201 (BYPASS=U2030:3mm)

PM_SLP_S4_L
CAMERA_PWR_EN_PCH
NOSTUFF CRITICAL U2030 74LVC1G08 SOT891 → CAMERA_PWR_EN
NC

R2030 0 5% 1/20W MF 0201

Power State Debug LEDs

(For development only)

PP3V3_S5 → R2094 DBGLED 0 5% 1/16W MF-LF 402 (PLACE_SIDE=BOTTOM) → PP3V3_S5_DBGLED (MIN_LINE_WIDTH=0.5 MM, MIN_NECK_WIDTH=0.25 MM, VOLTAGE=3.3V)

R2090 DBGLED 20K 5% 1/20W MF 201	R2091 DBGLED 20K 5% 1/20W MF 201	R2092 DBGLED 20K 5% 1/20W MF 201	R2093 DBGLED 20K 5% 1/20W MF 201	R2095 DBGLED 20K 5% 1/20W MF 201
DBGLED_S5	DBGLED_S4	DBGLED_S3	DBGLED_S0I3	DBGLED_S0
D2090 GREEN-56MCD-2MA-2.65V LTQH9G-SM (PLACE_SIDE=BOTTOM, SILK_PART=S5_ON)	D2091 GREEN-56MCD-2MA-2.65V LTQH9G-SM (PLACE_SIDE=BOTTOM, SILK_PART=S4BY_ON)	D2092 GREEN-56MCD-2MA-2.65V LTQH9G-SM (PLACE_SIDE=BOTTOM, SILK_PART=S3_ON)	D2093 GREEN-56MCD-2MA-2.65V LTQH9G-SM (PLACE_SIDE=BOTTOM, SILK_PART=S0I3_ON)	D2095 GREEN-56MCD-2MA-2.65V LTQH9G-SM (PLACE_SIDE=BOTTOM, SILK_PART=S0_ON)
DBGLED_S4_D		DBGLED_S3_D	DBGLED_S0I3_D	DBGLED_S0_D
Q2090 DMN5L06VK-7 SOT-563		Q2090 DMN5L06VK-7 SOT-563	Q2091 DMN5L06VK-7 SOT-563	Q2091 DMN5L06VK-7 SOT-563

S4_PWR_EN
PM_SLP_S4_L
PM_SLP_S3_L
PM_SLP_S0_L

TBT Aliases

(MAKE_BASE TRUE)

DP_TBTSNK0_DDC_CLK — DP_TBTSNK0_DDC_CLK
DP_TBTSNK0_DDC_DATA — DP_TBTSNK0_DDC_DATA

(MAKE_BASE TRUE)

DP_TBTSNK1_HPD — DP_TBTSNK1_HPD
=DP_TBTSNK1_ML_C_P<3..0> — DP_TBTSNK1_ML_C_P<3..0>
=DP_TBTSNK1_ML_C_N<3..0> — DP_TBTSNK1_ML_C_N<3..0>
DP_TBTSNK1_AUXCH_C_P — DP_TBTSNK1_AUXCH_C_P
DP_TBTSNK1_AUXCH_C_N — DP_TBTSNK1_AUXCH_C_N
DP_TBTSNK1_DDC_CLK — DP_TBTSNK1_DDC_CLK
DP_TBTSNK1_DDC_DATA — DP_TBTSNK1_DDC_DATA

Single-port TBT implementation does not require DDC Crossbar

(MAKE_BASE TRUE, MAKE_BASE)

JTAG_ISP_TDO — JTAG_ISP_TDO
XDP_JTAG_ISP_TCK — XDP_JTAG_ISP_TCK
XDP_JTAG_ISP_TDI — XDP_JTAG_ISP_TDI
JTAG_TBT_TMS — JTAG_TBT_TMS

No MAKE_BASE on TCK/TDI as these are provided on XDP page.

RAM Configuration Straps

Pull-downs for chip-down RAM systems

XDP_MLB_RAMCFG0
XDP_MLB_RAMCFG1
XDP_MLB_RAMCFG2
XDP_MLB_RAMCFG3

RAMCFG3:L	RAMCFG2:L	RAMCFG1:L	RAMCFG0:L
R2050 10K 5% 1/20W MF 201	R2051 10K 5% 1/20W MF 201	R2052 10K 5% 1/20W MF 201	R2053 10K 5% 1/20W MF 201

LPDDR3 Alias Support

TP_CPU_MEM_RESET_L — TP_CPU_MEM_RESET_L (MAKE_BASE=TRUE)
TP_MEM_VDD_SEL_1V5_L — TP_MEM_VDD_SEL_1V5_L (MAKE_BASE=TRUE)
PP0V6_S3_MEM_VREFDQ_A — PP0V6_S3_MEM_VREFDQ_A (MAKE_BASE=TRUE VOLTAGE=0.6V)
PP0V6_S3_MEM_VREFCA_A — PP0V6_S3_MEM_VREFCA_A (MAKE_BASE=TRUE VOLTAGE=0.6V)
PP0V6_S3_MEM_VREFDQ_B — PP0V6_S3_MEM_VREFDQ_B (MAKE_BASE=TRUE VOLTAGE=0.6V)
PP0V6_S3_MEM_VREFCA_B — PP0V6_S3_MEM_VREFCA_B (MAKE_BASE=TRUE VOLTAGE=0.6V)

SYNC_MASTER=J41_MLB SYNC_DATE=02/15/2013

PAGE TITLE: Project Chipset Support

Apple Inc.

DRAWING NUMBER: <SCH_NUM> SIZE: D
REVISION: <E4LABEL>
BRANCH: <BRANCH>
PAGE: 20 OF 121
SHEET: 18 OF 76

NOTICE OF PROPRIETARY PROPERTY:
THE INFORMATION CONTAINED HEREIN IS THE PROPRIETARY PROPERTY OF APPLE INC.
THE POSESSOR AGREES TO THE FOLLOWING:
I TO MAINTAIN THIS DOCUMENT IN CONFIDENCE
II NOT TO REPRODUCE OR COPY IT
III NOT TO REVEAL OR PUBLISH IT IN WHOLE OR PART
IV ALL RIGHTS RESERVED

WWW.AliSaler.Com

Page Notes

Power aliases required by this page:
- =PP3V3_S3_VREFMRGN
- =PPDDR_S3_MEMVREF

Signal aliases required by this page:
- =I2C_VREFDACS_SCL
- =I2C_VREFDACS_SDA
- =I2C_PCA9557D_SCL
- =I2C_PCA9557D_SDA

BOM options provided by this page:
- DDRVREF_DAC - Stuffs DAC margining circuit.

CPU-Based Margining

FETs for CPU isolation during DAC margining

CPU_DIMMA_VREFDQ → CRITICAL Q2220 DMN5L06VK-7 SOT-563

CPU_DIMMB_VREFDQ → CRITICAL Q2260 DMN5L06VK-7 SOT-563

CPU_DIMM_VREFCA → CRITICAL Q2220 DMN5L06VK-7 SOT-563; CRITICAL Q2260 DMN5L06VK-7 SOT-563

NOTE: CPU DAC output step sizes:
DDR3 (1.5V) 7.70mV per step
DDR3L (1.35V) 6.99mV per step
LPDDR3 (1.2V) ?.??mV per step

NOTE: CPU has single output for VREFCA. Split into two signals for independent DAC margining support. When DAC margining VREFCA ensure VREFMRGN_CPU_EN is low to remove short due to CPU.

CPU MEM VREFDQ A ISOL — DDRVREF_DAC R2225 100K 5% 1/20W MF 201; DDRVREF_DAC R2201 100K 5% 1/20W MF 201; VREFMRGN_DQ_A_EN_RC; DDRVREF_DAC C2225 0.1UF 10% 6.3V CERM-X5R 0201; CRITICAL DDRVREF_DAC Q2225 DMN5L06VK-7 SOT-563

CPU MEM VREFDQ B ISOL — DDRVREF_DAC R2245 100K 5% 1/20W MF 201; DDRVREF_DAC R2202 100K 5% 1/20W MF 201; VREFMRGN_DQ_B_EN_RC; DDRVREF_DAC C2245 0.1UF 10% 6.3V CERM-X5R 0201; CRITICAL DDRVREF_DAC Q2265 DMN5L06VK-7 SOT-563

CPU MEM VREFCA A ISOL — DDRVREF_DAC R2265 100K 5% 1/20W MF 201; DDRVREF_DAC R2215 100K 5% 1/20W MF 201; VREFMRGN_CA_A_EN_RC; DDRVREF_DAC C2265 0.1UF 10% 6.3V CERM-X5R 0201; CRITICAL DDRVREF_DAC Q2225 DMN5L06VK-7 SOT-563

CPU MEM VREFCA B ISOL — DDRVREF_DAC R2285 100K 5% 1/20W MF 201; DDRVREF_DAC R2207 100K 5% 1/20W MF 201; VREFMRGN_CA_B_EN_RC; DDRVREF_DAC C2285 0.1UF 10% 6.3V CERM-X5R 0201; CRITICAL DDRVREF_DAC Q2265 DMN5L06VK-7 SOT-563

EN RC's to avoid drain glitches
May not be necessary due to C22x0

Q2225 pin 6: PLACE_NEAR=Q2220.6:2.54mm

Q2265 pin 6: PLACE_NEAR=Q2260.6:2.54mm

R22x6 pin 2:
PLACE_NEAR=Q2225.1:2.54mm
PLACE_NEAR=Q2265.1:2.54mm
PLACE_NEAR=Q2225.4:2.54mm
PLACE_NEAR=Q2265.4:2.54mm

VRef Dividers

Always used, regardless of margining option.

PP1V2_S3

R2223 10 1% 1/20W MF 201	PLACE_NEAR=Q2220.6:2mm	C2220 0.022UF 10% 6.3V X5R-CERM 0201	MEM_VREFDQ_A_RC	R2220 24.9 1% 1/20W MF 201
R2243 10 1% 1/20W MF 201	PLACE_NEAR=Q2260.6:2mm	C2240 0.022UF 10% 6.3V X5R-CERM 0201	MEM_VREFDQ_B_RC	R2240 24.9 1% 1/20W MF 201
R2263 10 1% 1/20W MF 201	PLACE_NEAR=Q2220.3:2mm	C2260 0.022UF 10% 6.3V X5R-CERM 0201	MEM_VREFCA_A_RC	R2260 24.9 1% 1/20W MF 201
R2283 10 1% 1/20W MF 201	PLACE_NEAR=Q2260.3:2mm	C2280 0.022UF 10% 6.3V X5R-CERM 0201	MEM_VREFCA_B_RC	R2280 24.9 1% 1/20W MF 201

R2221 8.2K 1% 1/20W MF 201	PLACE_NEAR=Q2220.6:3mm	PP0V6_S3_MEM_VREFDQ_A	MIN_LINE_WIDTH=0.3 mm, MIN_NECK_WIDTH=0.2 mm
R2222 8.2K 1% 1/20W MF 201	PLACE_NEAR=Q2221.2:1mm		
R2241 8.2K 1% 1/20W MF 201	PLACE_NEAR=Q2260.6:3mm	PP0V6_S3_MEM_VREFDQ_B	MIN_LINE_WIDTH=0.3 mm, MIN_NECK_WIDTH=0.2 mm
R2242 8.2K 1% 1/20W MF 201	PLACE_NEAR=Q2241.2:1mm		
R2261 8.2K 1% 1/20W MF 201	PLACE_NEAR=Q2220.3:3mm	PP0V6_S3_MEM_VREFCA_A	MIN_LINE_WIDTH=0.3 mm, MIN_NECK_WIDTH=0.2 mm
R2262 8.2K 1% 1/20W MF 201	PLACE_NEAR=Q2261.2:1mm		
R2281 8.2K 1% 1/20W MF 201	PLACE_NEAR=Q2260.3:3mm	PP0V6_S3_MEM_VREFCA_B	MIN_LINE_WIDTH=0.3 mm, MIN_NECK_WIDTH=0.2 mm
R2282 8.2K 1% 1/20W MF 201	PLACE_NEAR=Q2281.2:1mm		

DAC-Based Margining

DAC sets voltage level, PCA9557 & FETs enable outputs and disables margining after platform reset.

PP3V3_S3 → OMIT R2218 SHORT NONE NONE NONE NONE 402 → PP3V3_S3_VREFMRGN_DAC (MIN_LINE_WIDTH=0.3 mm, MIN_NECK_WIDTH=0.2 mm, VOLTAGE=3.3V)

DDRVREF_DAC C2200 2.2UF 20% 6.3V CERM 402-LF; DDRVREF_DAC C2201 0.1UF 10% 6.3V CERM-X5R 0201

CRITICAL DDRVREF_DAC U2200 MSOP DAC5574

SMBUS_PCH_CLK; SMBUS_PCH_DATA

Addr=0x98(WR)/0x99(RD)

VREFMRGN_DQ_A; VREFMRGN_DQ_B; VREFMRGN_CA_AB; VREFMRGN_MEMVREG

(All 4 R's) DDRVREF_DAC
R2226 4.02K 1% 1/20W MF 201 — VREFMRGN_DQ_A_RDIV
R2246 4.02K 1% 1/20W MF 201 — VREFMRGN_DQ_B_RDIV
R2266 4.02K 1% 1/20W MF 201 — VREFMRGN_CA_A_RDIV
R2286 4.02K 1% 1/20W MF 201 — VREFMRGN_CA_B_RDIV

NOTE: MEMVREG and SPARE share a DAC output, cannot enable both at the same time!

DDRVREF_DAC C2202 0.1UF 10% 6.3V CERM-X5R 0201

CRITICAL DDRVREF_DAC U2201 PCA9557 QFN (OD)

R2200 100K 5% 1/20W MF 201

Addr=0x30(WR)/0x31(RD)

VREFMRGN_CPU_EN; VREFMRGN_DQ_A_EN; VREFMRGN_DQ_B_EN; VREFMRGN_CA_A_EN; VREFMRGN_CA_B_EN; VREFMRGN_MEMVREG_EN; VREFMRGN_SPARE_EN

SMBUS_PCH_CLK; SMBUS_PCH_DATA

RESET* → PCA9557D_RESET_L

RST* on 'platform reset' so that system watchdog will disable margining.

NOTE: Margining will be disabled across all soft-resets and sleep/wake cycles.

PP3V3_S3

DDRVREF_DAC C2205 0.1UF 10% 6.3V CERM-X5R 0201

CRITICAL DDRVREF_DAC U2204 MAX4253 UCSP — VREFMRGN_MEMVREG_BUF

DDRVREF_DAC R2214 38.3K 1% 1/20W MF 201 — DDRREG_FB (OUT) — PLACE_NEAR=R7415.2:1mm

DDRVREF_DAC R2213 100K 5% 1/20W MF 201

CRITICAL DDRVREF_DAC U2204 MAX4253 UCSP — VREFMRGN_SPARE_BUF

DDRVREF_DAC R2217 1M 5% 1/20W MF 201

Pins B1 & B4: CKPLUS_WAIVE=unconnected_pins

DDRVREF_DAC R2212 100K 5% 1/20W MF 201

	MEM A VREF DQ	MEM B VREF DQ	MEM A VREF CA	MEM B VREF CA	MEM VREG	
DAC Channel:	A	B	C	C	D	
PCA9557D Pin:	1	2	3	4	5	
	LPDDR3 (1.2V)		DDR3L (1.35V)		LPDDR3 (1.2V)	DDR3L (1.35V)
Nominal value	0.600V (DAC: 0x2E.5)		0.675V (DAC: 0x34)		1.200V (DAC: 0x5D)	1.343V (DAC: 0x68)
Margined target:	0.300V - 0.900V (+/- 300mV)		0.337V - 1.013V (+/- 337.5mV)		0.800V - 1.600V (+/- 400mV)	0.972V - 1.714V (+/- 371mV)
DAC range:	0.000V - 1.199V (0x00 - 0x5D)		0.000V - 1.354V (0x00 - 0x69)		0.000V - 2.397V (0x00 - 0xBA)	0.000V - 2.694V (0x00 - 0xD1)
VRef current:	+73uA - -73uA (- = sourced)		+82uA - -82uA (- = sourced)		+21uA - -21uA (- = sourced)	+25uA - -25uA (- = sourced)
DAC step size:	6.36mV / step @ output		6.36mV / step @ output		4.28mV / step @ output	3.53mV / step @ output

NOTE: LPDDR3 assumes TPS51916 supply with 28.7k/57.6k divider
DDR3L assumes TPS51916 supply with 19.6k/57.6k divider

SYNC_MASTER=J41_MLB SYNC_DATE=02/12/2013

PAGE TITLE: DDR3 VREF MARGINING

Apple Inc.

DRAWING NUMBER: <SCH_NUM> SIZE: D
REVISION: <E4LABEL>
BRANCH: <BRANCH>
PAGE: 22 OF 121
SHEET: 19 OF 76

NOTICE OF PROPRIETARY PROPERTY:
THE INFORMATION CONTAINED HEREIN IS THE PROPRIETARY PROPERTY OF APPLE INC.
THE POSESSOR AGREES TO THE FOLLOWING:
I TO MAINTAIN THIS DOCUMENT IN CONFIDENCE
II NOT TO REPRODUCE OR COPY IT
III NOT TO REVEAL OR PUBLISH IT IN WHOLE OR PART
IV ALL RIGHTS RESERVED

WWW.AliSaler.Com

LPDDR3 CHANNEL A (0-31)

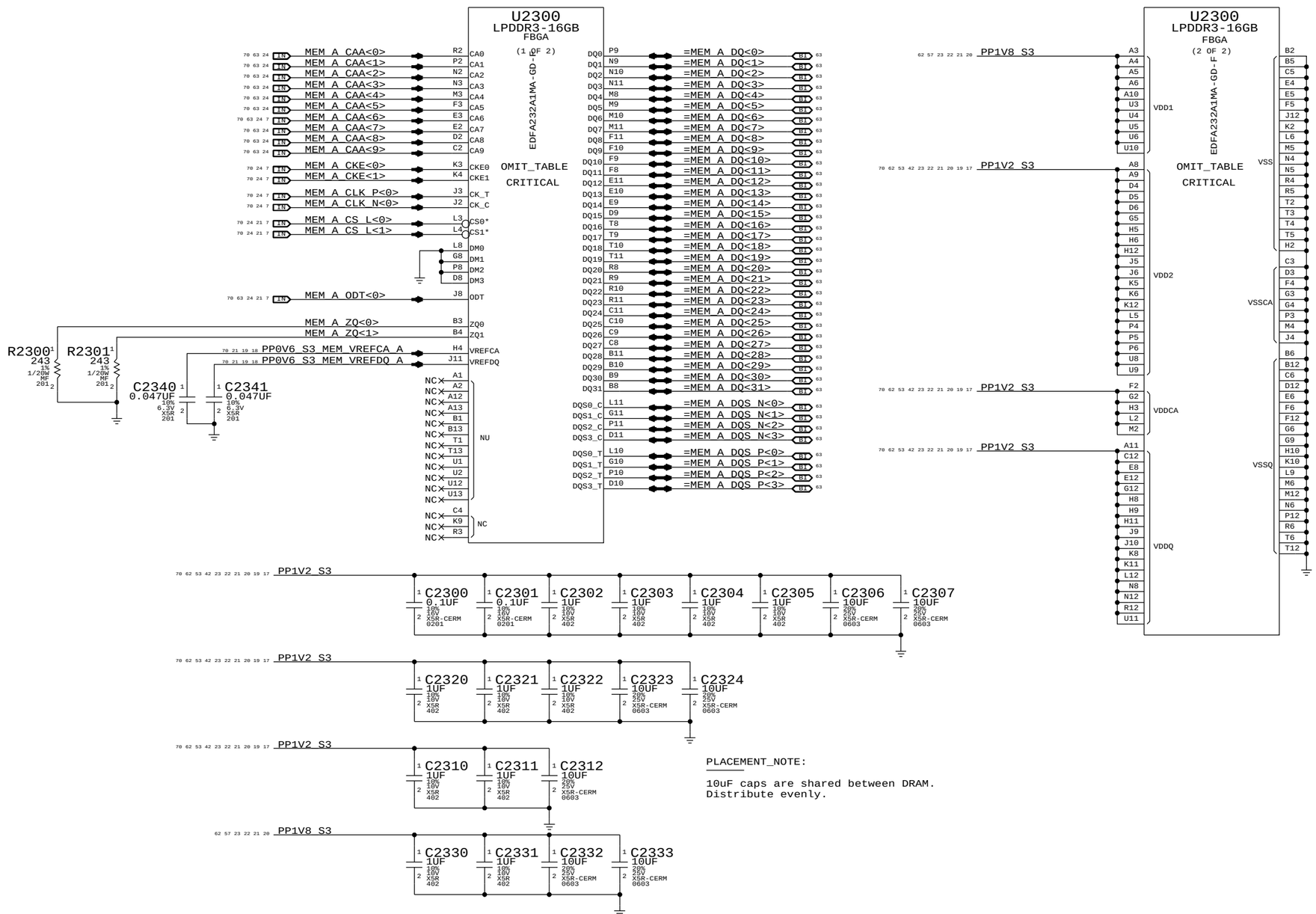

PLACEMENT_NOTE:

10uF caps are shared between DRAM.
Distribute evenly.

SYNC_MASTER=J41_MLB SYNC_DATE=02/06/2013

PAGE TITLE
LPDDR3 DRAM Channel A (0-31)

Apple Inc.

DRAWING NUMBER <SCH_NUM> SIZE D
REVISION <E4LABEL>
BRANCH <BRANCH>
PAGE 23 OF 121
SHEET 20 OF 76

NOTICE OF PROPRIETARY PROPERTY:
THE INFORMATION CONTAINED HEREIN IS THE PROPRIETARY PROPERTY OF APPLE INC.
THE POSESSOR AGREES TO THE FOLLOWING:
I TO MAINTAIN THIS DOCUMENT IN CONFIDENCE
II NOT TO REPRODUCE OR COPY IT
III NOT TO REVEAL OR PUBLISH IT IN WHOLE OR PART
IV ALL RIGHTS RESERVED

WWW.AliSaler.Com

LPDDR3 CHANNEL A (32-63)

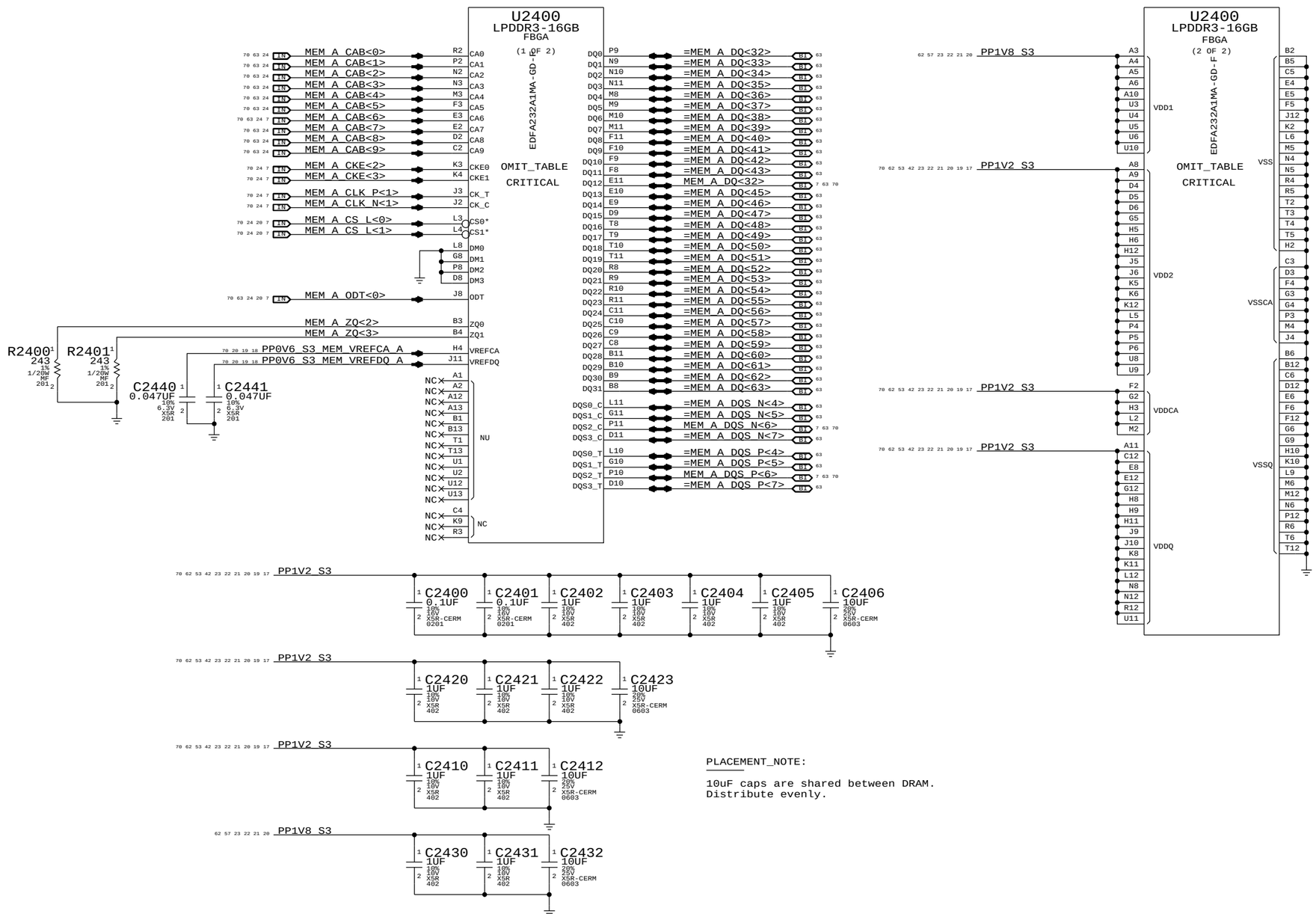

PLACEMENT_NOTE:

10uF caps are shared between DRAM.
Distribute evenly.

SYNC_MASTER=J41_MLB SYNC_DATE=02/06/2013

PAGE TITLE
LPDDR3 DRAM Channel A (32-63)

Apple Inc.

DRAWING NUMBER <SCH_NUM> SIZE D

REVISION <E4LABEL>

BRANCH <BRANCH>

PAGE 24 OF 121

SHEET 21 OF 76

NOTICE OF PROPRIETARY PROPERTY:
THE INFORMATION CONTAINED HEREIN IS THE PROPRIETARY PROPERTY OF APPLE INC.
THE POSESSOR AGREES TO THE FOLLOWING:
I TO MAINTAIN THIS DOCUMENT IN CONFIDENCE
II NOT TO REPRODUCE OR COPY IT
III NOT TO REVEAL OR PUBLISH IT IN WHOLE OR PART
IV ALL RIGHTS RESERVED

WWW.AliSaler.Com

LPDDR3 CHANNEL B (0-31)

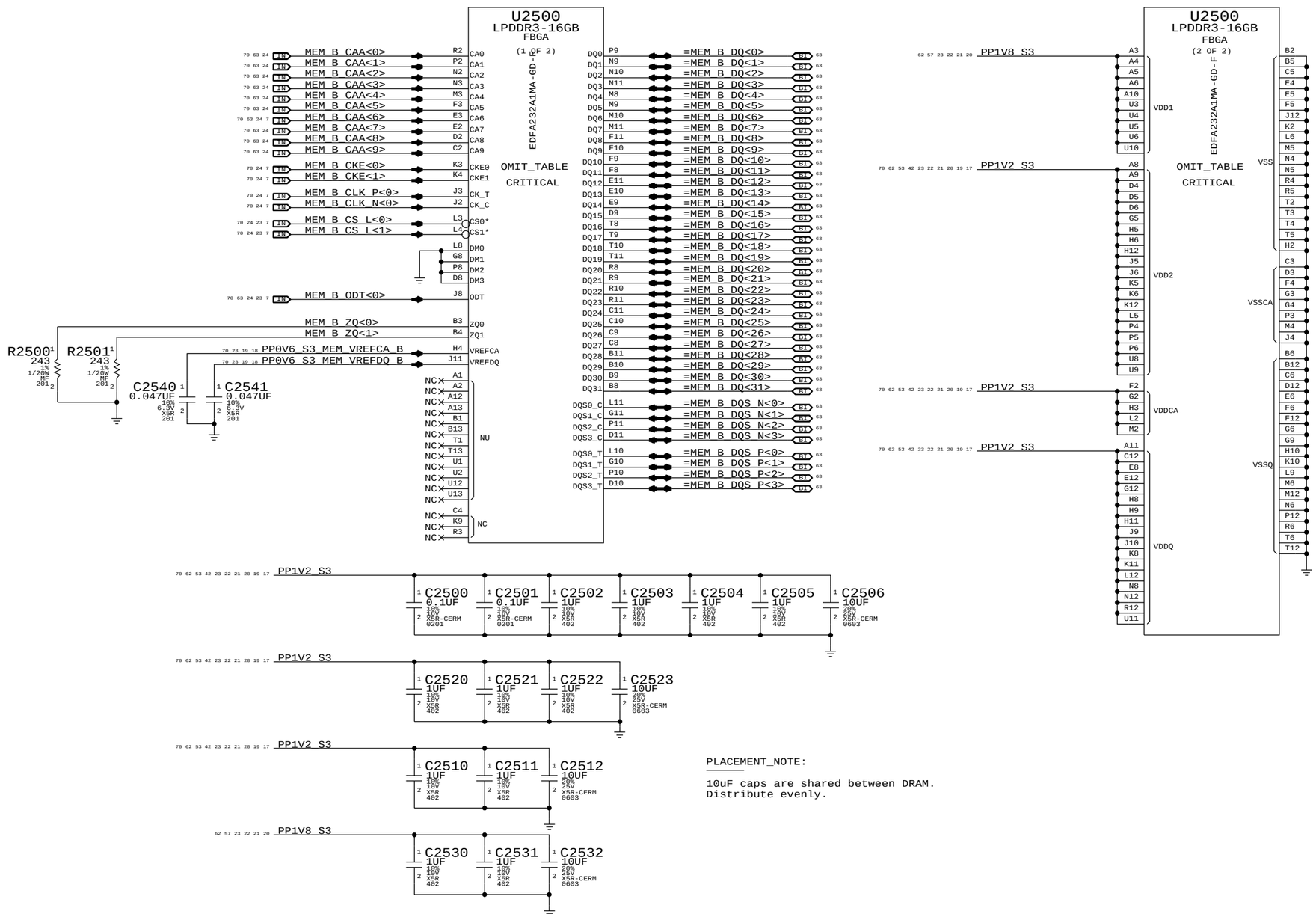

PLACEMENT_NOTE:

10uF caps are shared between DRAM.
Distribute evenly.

SYNC_MASTER=J41_MLB SYNC_DATE=02/06/2013

PAGE TITLE
LPDDR3 DRAM Channel B (0-31)

Apple Inc.

DRAWING NUMBER <SCH_NUM> SIZE D

REVISION <E4LABEL>

BRANCH <BRANCH>

PAGE 25 OF 121

SHEET 22 OF 76

NOTICE OF PROPRIETARY PROPERTY:
THE INFORMATION CONTAINED HEREIN IS THE PROPRIETARY PROPERTY OF APPLE INC.
THE POSESSOR AGREES TO THE FOLLOWING:
I TO MAINTAIN THIS DOCUMENT IN CONFIDENCE
II NOT TO REPRODUCE OR COPY IT
III NOT TO REVEAL OR PUBLISH IT IN WHOLE OR PART
IV ALL RIGHTS RESERVED

WWW.AliSaler.Com

LPDDR3 CHANNEL B (32-63)

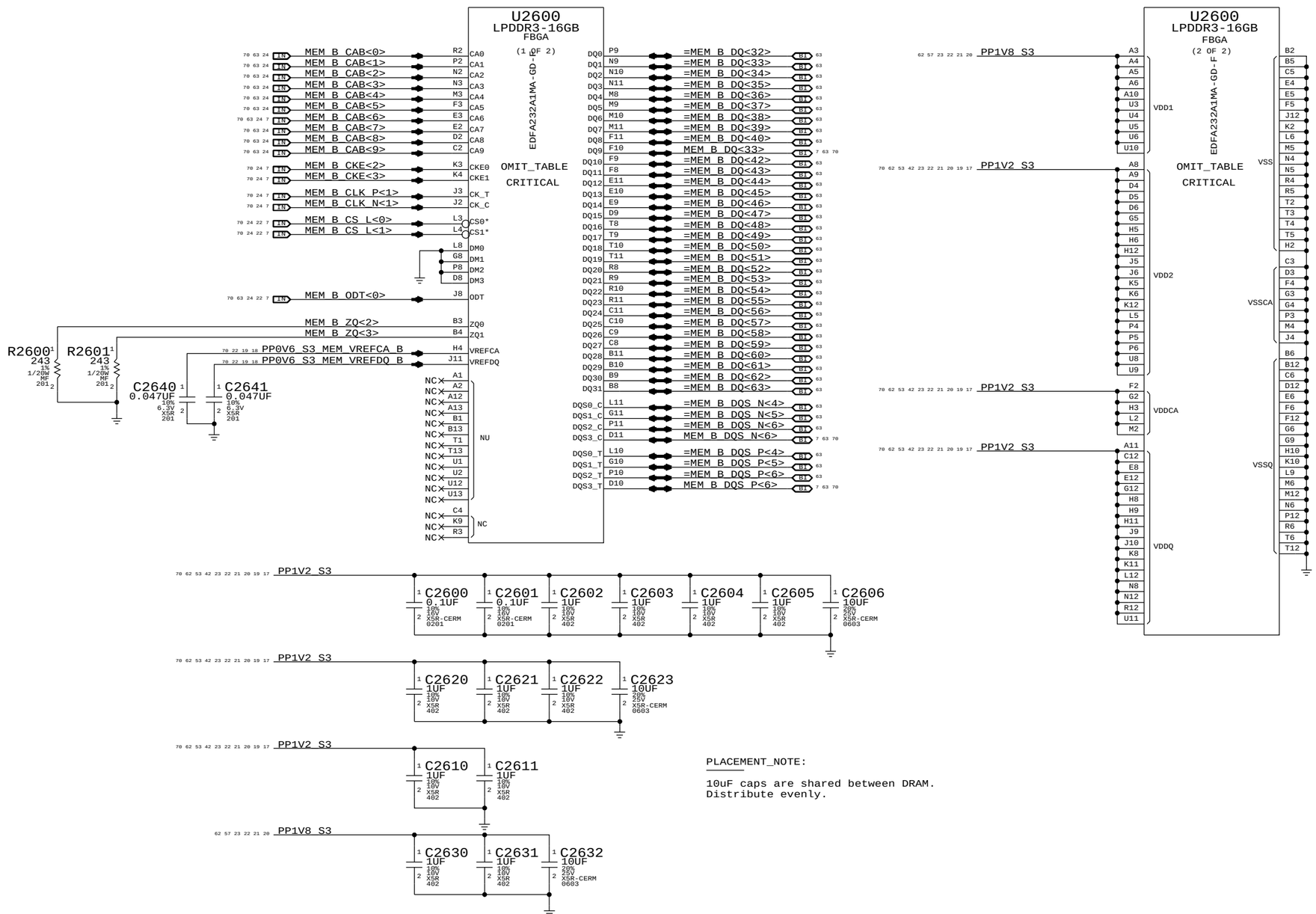

PLACEMENT_NOTE:

10uF caps are shared between DRAM.
Distribute evenly.

SYNC_MASTER=J41_MLB SYNC_DATE=02/06/2013

PAGE TITLE
LPDDR3 DRAM Channel B (32-63)

Apple Inc.

DRAWING NUMBER <SCH_NUM> SIZE D

REVISION <E4LABEL>

BRANCH <BRANCH>

PAGE 26 OF 121

SHEET 23 OF 76

NOTICE OF PROPRIETARY PROPERTY:
THE INFORMATION CONTAINED HEREIN IS THE PROPRIETARY PROPERTY OF APPLE INC.
THE POSESSOR AGREES TO THE FOLLOWING:
I TO MAINTAIN THIS DOCUMENT IN CONFIDENCE
II NOT TO REPRODUCE OR COPY IT
III NOT TO REVEAL OR PUBLISH IT IN WHOLE OR PART
IV ALL RIGHTS RESERVED

WWW.AliSaler.Com

Intel reccomends 55 Ohm for CMD/ADDR, 80 Ohm for CTRL/CKE, 38 Ohm for CLK

62 53 24 PP0V6_S0_DDRVTT

70 63 20	IN	MEM_A_CAA<9>	RP2701	56	5% 1/32W 4X0201-HF
70 63 20	IN	MEM_A_CAA<8>	RP2701	56	5% 1/32W 4X0201-HF
70 63 20 7	IN	MEM_A_CAA<6>	RP2701	56	5% 1/32W 4X0201-HF
70 63 20	IN	MEM_A_CAA<7>	RP2701	56	5% 1/32W 4X0201-HF
70 63 20	IN	MEM_A_CAA<5>	R2700	56	5% 1/32W 4X0201-HF
70 20 7	IN	MEM_A_CLK_P<0>	R2701	39	5% 1/20W 201 MF
70 20 7	IN	MEM_A_CLK_N<0>	R2702	39	5% 1/20W 201 MF
70 20 7	IN	MEM_A_CKE<1>	R2703	82	5% 1/20W 201 MF
70 20 7	IN	MEM_A_CKE<0>	R2704	82	5% 1/20W 201 MF
70 63 20	IN	MEM_A_CAA<4>	R2705	56	5% 1/20W 201 MF
70 63 20	IN	MEM_A_CAA<3>	R2706	56	5% 1/20W 201 MF
70 63 20	IN	MEM_A_CAA<2>	RP2703	56	5% 1/20W 201 MF
70 63 20	IN	MEM_A_CAA<1>	RP2703	56	5% 1/32W 4X0201-HF
70 63 20	IN	MEM_A_CAA<0>	RP2703	56	5% 1/32W 4X0201-HF
70 63 21	IN	MEM_A_CAB<9>	R2725	56	5% 1/32W 4X0201-HF
70 63 21	IN	MEM_A_CAB<8>	RP2707	56	5% 1/20W 201 MF
70 63 21 7	IN	MEM_A_CAB<6>	RP2707	56	5% 1/32W 4X0201-HF
70 63 21	IN	MEM_A_CAB<7>	RP2707	56	5% 1/32W 4X0201-HF
70 63 21	IN	MEM_A_CAB<5>	RP2707	56	5% 1/32W 4X0201-HF
70 21 7	IN	MEM_A_CLK_P<1>	R2707	39	5% 1/32W 4X0201-HF
70 21 7	IN	MEM_A_CLK_N<1>	R2708	39	5% 1/20W 201 MF
70 21 7	IN	MEM_A_CKE<2>	R2709	82	5% 1/20W 201 MF
70 21 7	IN	MEM_A_CKE<3>	R2720	82	5% 1/20W 201 MF
70 63 21	IN	MEM_A_CAB<4>	R2721	56	5% 1/20W 201 MF
70 63 21	IN	MEM_A_CAB<2>	RP2704	56	5% 1/32W 4X0201-HF
70 63 21	IN	MEM_A_CAB<3>	RP2704	56	5% 1/32W 4X0201-HF
70 63 21	IN	MEM_A_CAB<1>	RP2704	56	5% 1/32W 4X0201-HF
70 63 21	IN	MEM_A_CAB<0>	RP2704	56	5% 1/32W 4X0201-HF
70 21 20 7	IN	MEM_A_CS_L<0>	R2722	82	5% 1/20W 201 MF
70 21 20 7	IN	MEM_A_CS_L<1>	R2723	82	5% 1/20W 201 MF
70 63 21 20 7	IN	MEM_A_ODT<0>	R2724	82	5% 1/20W 201 MF

Spare
RP2703
56
NC × 1 ∧∨∧ 8 × NC
5%
1/32W
4X0201-HF

C2700	0.47UF	20% 4V CERM-X5R-1 201
C2701	0.47UF	20% 4V CERM-X5R-1 201
C2702	0.47UF	20% 4V CERM-X5R-1 201
C2703	0.47UF	20% 4V CERM-X5R-1 201
C2704	0.47UF	20% 4V CERM-X5R-1 201
C2705	0.47UF	20% 4V CERM-X5R-1 201
C2706	0.47UF	20% 4V CERM-X5R-1 201
C2707	0.47UF	20% 4V CERM-X5R-1 201
C2708	0.47UF	20% 4V CERM-X5R-1 201
C2709	0.47UF	20% 4V CERM-X5R-1 201

PLACE_NEAR=RP2701.5:4mm

CRITICAL
C2720
22UF
20%
6.3V
X6S-CERM-1
603

62 53 24 PP0V6_S0_DDRVTT

70 63 22	IN	MEM_B_CAA<9>	RP2712	56	5% 1/32W 4X0201-HF
70 63 22	IN	MEM_B_CAA<8>	RP2712	56	5% 1/32W 4X0201-HF
70 63 22	IN	MEM_B_CAA<7>	RP2712	56	5% 1/32W 4X0201-HF
70 63 22 7	IN	MEM_B_CAA<6>	RP2712	56	5% 1/32W 4X0201-HF
70 63 22	IN	MEM_B_CAA<5>	R2710	56	5% 1/32W 4X0201-HF
70 22 7	IN	MEM_B_CLK_P<0>	R2711	39	5% 1/20W 201 MF
70 22 7	IN	MEM_B_CLK_N<0>	R2712	39	5% 1/20W 201 MF
70 22 7	IN	MEM_B_CKE<1>	R2713	82	5% 1/20W 201 MF
70 22 7	IN	MEM_B_CKE<0>	R2714	82	5% 1/20W 201 MF
70 63 22	IN	MEM_B_CAA<4>	R2715	56	5% 1/20W 201 MF
70 63 22	IN	MEM_B_CAA<2>	R2716	56	5% 1/20W 201 MF
70 63 22	IN	MEM_B_CAA<3>	RP2713	56	5% 1/20W 201 MF
70 63 22	IN	MEM_B_CAA<1>	RP2713	56	5% 1/32W 4X0201-HF
70 63 22	IN	MEM_B_CAA<0>	RP2713	56	5% 1/32W 4X0201-HF
70 63 23	IN	MEM_B_CAB<9>	R2735	56	5% 1/32W 4X0201-HF
70 63 23	IN	MEM_B_CAB<8>	RP2717	56	5% 1/20W 201 MF
70 63 23	IN	MEM_B_CAB<7>	RP2717	56	5% 1/32W 4X0201-HF
70 63 23 7	IN	MEM_B_CAB<6>	RP2717	56	5% 1/32W 4X0201-HF
70 63 23	IN	MEM_B_CAB<5>	RP2717	56	5% 1/32W 4X0201-HF
70 23 7	IN	MEM_B_CLK_N<1>	R2717	39	5% 1/32W 4X0201-HF
70 23 7	IN	MEM_B_CLK_P<1>	R2718	39	5% 1/20W 201 MF
70 23 7	IN	MEM_B_CKE<2>	R2719	82	5% 1/20W 201 MF
70 23 7	IN	MEM_B_CKE<3>	R2730	82	5% 1/20W 201 MF
70 63 23	IN	MEM_B_CAB<4>	R2731	56	5% 1/20W 201 MF
70 63 23	IN	MEM_B_CAB<2>	RP2714	56	5% 1/20W 201 MF
70 63 23	IN	MEM_B_CAB<3>	RP2714	56	5% 1/32W 4X0201-HF
70 63 23	IN	MEM_B_CAB<1>	RP2714	56	5% 1/32W 4X0201-HF
70 63 23	IN	MEM_B_CAB<0>	RP2714	56	5% 1/32W 4X0201-HF
70 23 22 7	IN	MEM_B_CS_L<0>	R2732	82	5% 1/20W 201 MF
70 23 22 7	IN	MEM_B_CS_L<1>	R2733	82	5% 1/20W 201 MF
70 63 23 22 7	IN	MEM_B_ODT<0>	R2734	82	5% 1/20W 201 MF

Spare
RP2713
56
NC × 1 ∧∨∧ 8 × NC
5%
1/32W
4X0201-HF

C2710	0.47UF	20% 4V CERM-X5R-1 201
C2711	0.47UF	20% 4V CERM-X5R-1 201
C2712	0.47UF	20% 4V CERM-X5R-1 201
C2713	0.47UF	20% 4V CERM-X5R-1 201
C2714	0.47UF	20% 4V CERM-X5R-1 201
C2715	0.47UF	20% 4V CERM-X5R-1 201
C2716	0.47UF	20% 4V CERM-X5R-1 201
C2717	0.47UF	20% 4V CERM-X5R-1 201
C2718	0.47UF	20% 4V CERM-X5R-1 201
C2719	0.47UF	20% 4V CERM-X5R-1 201

PLACE_NEAR=RP2714.8:4mm

CRITICAL
C2740
22UF
20%
6.3V
X6S-CERM-1
603

SYNC_MASTER=J41_MLB SYNC_DATE=02/06/2013

PAGE TITLE
LPDDR3 DRAM Termination

Apple Inc.

DRAWING NUMBER <SCH_NUM> SIZE D
REVISION <E4LABEL>
BRANCH <BRANCH>
PAGE 27 OF 121
SHEET 24 OF 76

NOTICE OF PROPRIETARY PROPERTY:
THE INFORMATION CONTAINED HEREIN IS THE PROPRIETARY PROPERTY OF APPLE INC.
THE POSESSOR AGREES TO THE FOLLOWING:
I TO MAINTAIN THIS DOCUMENT IN CONFIDENCE
II NOT TO REPRODUCE OR COPY IT
III NOT TO REVEAL OR PUBLISH IT IN WHOLE OR PART
IV ALL RIGHTS RESERVED

WWW.AliSaler.Com

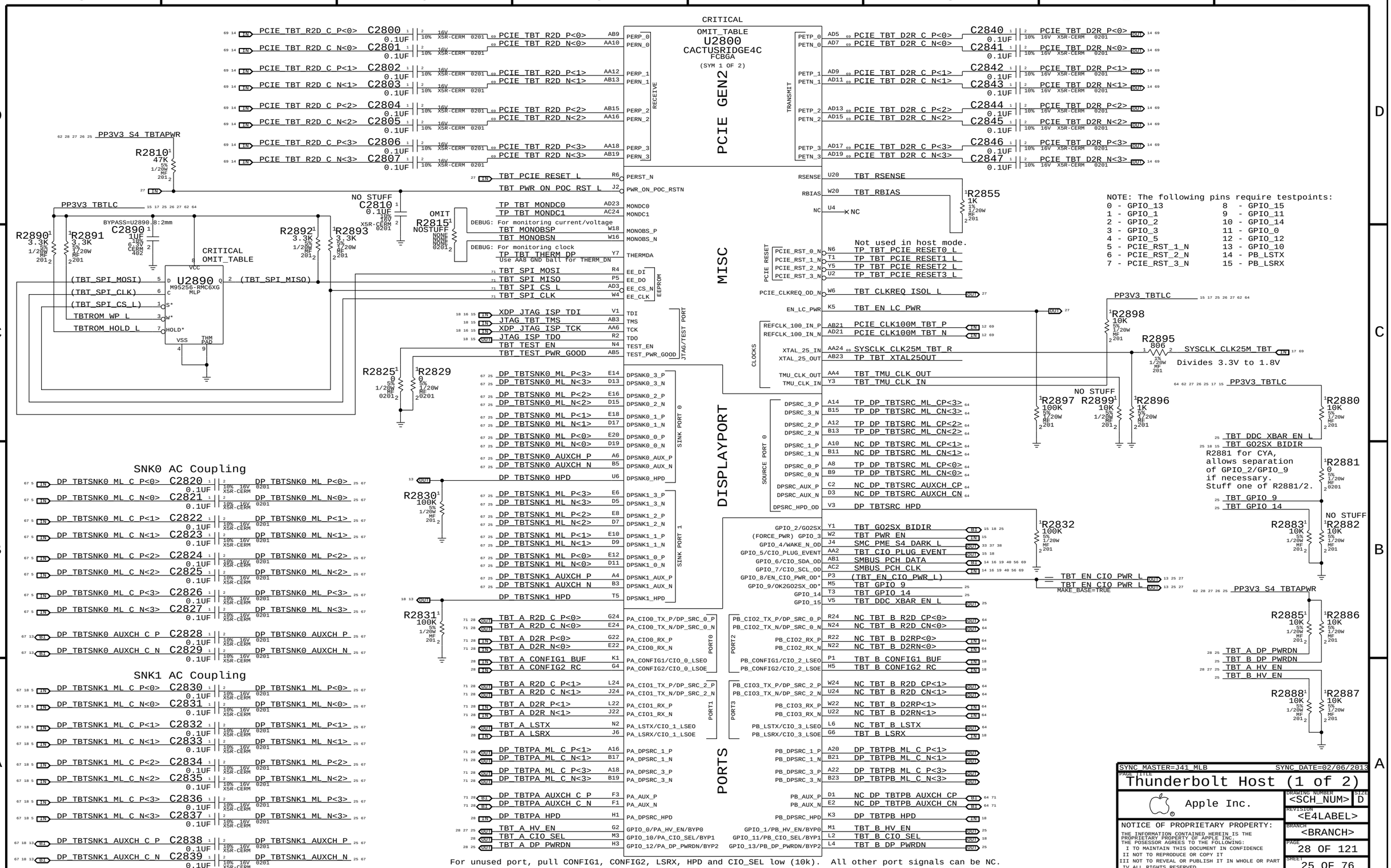

WWW.AliSaler.Com

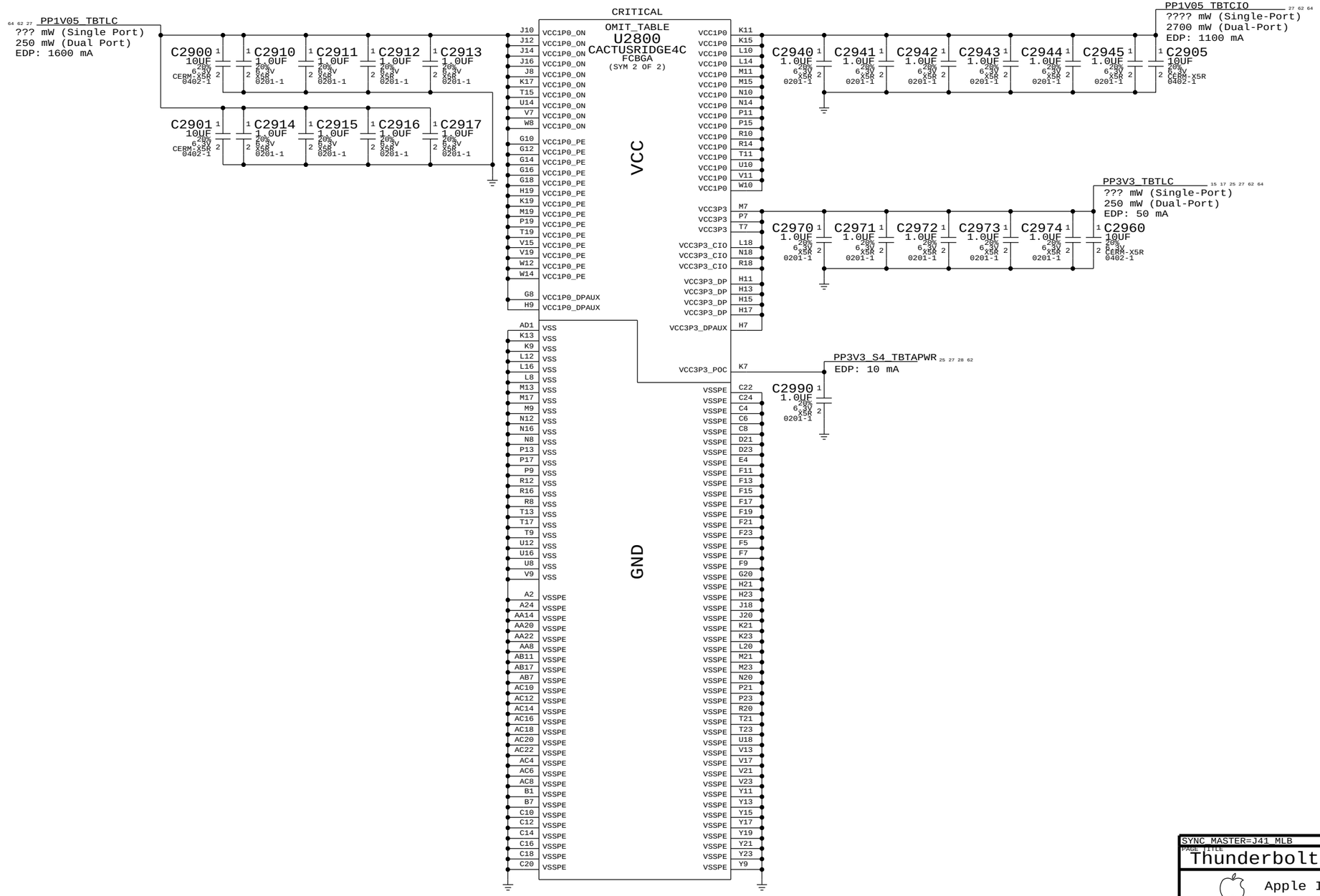

EDP numbers are from 12/22/2011 email from Haim Lustig (Intel) to Paul Baker (Apple)
Power consumption figures from CR DG v0.57, IBL doc #472455.

SYNC_MASTER=J41_MLB SYNC_DATE=02/06/2013

PAGE TITLE
Thunderbolt Host (2 of 2)

Apple Inc.

DRAWING NUMBER <SCH_NUM> SIZE D
REVISION <E4LABEL>
BRANCH <BRANCH>
PAGE 29 OF 121
SHEET 26 OF 76

NOTICE OF PROPRIETARY PROPERTY:
THE INFORMATION CONTAINED HEREIN IS THE PROPRIETARY PROPERTY OF APPLE INC.
THE POSESSOR AGREES TO THE FOLLOWING:
I TO MAINTAIN THIS DOCUMENT IN CONFIDENCE
II NOT TO REPRODUCE OR COPY IT
III NOT TO REVEAL OR PUBLISH IT IN WHOLE OR PART
IV ALL RIGHTS RESERVED

WWW.AliSaler.Com

Page Notes

Power aliases required by this page:
- =PPVIN_SW_TBTBST (8-13V Boost Input)
- =PP15V_TBT_REG (15V Boost Output)
- =PP3V3_TBT_P3V3TBTFET (3.3V FET Input)
- =PP3V3_TBT_FET (3.3V FET Output)
- =PP3V3_S0_TBTPWRCTL
- =PP1V05_TBT_P1V05TBTFET (1.05V FET Input)
- =PP1V05_TBT_FET (1.05V FET Output)

Signal aliases required by this page:
- =TBT_CLKREQ_L
- =TBT_RESET_L

BOM options provided by this page:
(NONE)

TBT 15V Boost Regulator

SI8409DB:
Vds(max): -30V
Vgs(max): +/-12V
Vgs(th): -1.4V
Rds(on): 46mOhm @ 4.5V Vgs
Id(max): 3.7A @ 70C

CRITICAL Q3080 SI8409DB BGA

PPBUS_G3H — 8-13V Input Changes required for 2S.

R3080 470K 5% 1/20W MF 201 — C3080 0.1UF 10% 16V X5R 402 — TBTBST_PWREN_DIV_L

R3081 150K 5% 1/20W MF 201 — TBTBST_PWREN_L

Q3005 DMN32D2LFB4 DFN1006H4-3 SYM_VER_2 — TBT_A_HV_EN

PPVIN_S4SW_TBTBST_FET
MIN_LINE_WIDTH=0.5 mm
MIN_NECK_WIDTH=0.25 mm
Voltage not specified here, add property on another page.

C3090 10UF 20% 25V X5R-CERM 0603 — C3091 10UF 20% 25V X5R-CERM 0603

R3091 200K 1% 1/20W MF 201 <R1>

CRITICAL L3095 6.8UH-4.0A PIMB062D-SM

TBTBST_BOOST
MIN_LINE_WIDTH=0.5 mm
MIN_NECK_WIDTH=0.25 mm
SWITCH_MODE=TRUE
DIOT=TRUE

TBTBST_SNS1
MIN_LINE_WIDTH=0.2 mm
MIN_NECK_WIDTH=0.2 mm

R3089 0 5% 1/20W MF 0201

TBTBST_SNS2
MIN_LINE_WIDTH=0.2 mm
MIN_NECK_WIDTH=0.2 mm

CRITICAL D3095 POWERDI-123 DFLS230L

PP15V_TBT
Vout = 15.1V
Max Current = 1.0A
Freq = 300KHz

XW3095 SM — PLACE_NEAR=C3095.1:2 mm

TBTBST_VSNS
MIN_LINE_WIDTH=0.2 mm
MIN_NECK_WIDTH=0.2 mm

CRITICAL U3090 LT3957 QFN

TBTBST_EN_UVLO — EN/UVLO
TBTBST_INTVCC — INTVCC
TBTBST_VC — VC
TBTBST_RT — RT
TBTBST_SS — SS
SYNC
VIN — SW — SNS1 — SNS2 — FBX — NC

R3090 49.9K 1% 1/16W MF-LF 402

TBTBST_VSNS_RC — C3088 22PF 5% 50V CERM 0402

R3095 133K 1% 1/16W MF-LF 402 <Ra>

TBTBST_FBX
MIN_LINE_WIDTH=0.2 mm
MIN_NECK_WIDTH=0.2 mm

NO STUFF C3089 100PF 5% 50V CERM 402

R3096 15.8K 1% 1/16W MF-LF 402 <Rb>

C3095 10UF 20% 25V X5R-CERM 0603 — C3097 10UF 20% 25V X5R-CERM 0603 — C3096 10UF 20% 25V X5R-CERM 0603 — C3098 10UF 20% 25V X5R-CERM 0603 — C3084 10UF 20% 25V X5R-CERM 0603 — C309A 10UF 20% 25V X5R-CERM 0603 — C3085 10UF 20% 25V X5R-CERM 0603 — C309B 10UF 20% 25V X5R-CERM 0603 — C3099 0.001UF 10% 50V X7R-CERM 0402

C3081 2.2UF 20% 25V X5R-CERM 402 — C3092 2.2UF 20% 25V X5R-CERM 402 — C3087 47PF 5% 25V NP0-C0G-CERM 0201 — R3093 10K 1% 1/20W MF 201 — C3082 2.2UF 20% 10V X5R-CERM 402 — C3093 3300PF 10% 10V X7R-CERM 0201 — R3094 41.2K 1% 1/20W MF 201 — C3094 0.33UF 10% 6.3V CERM-X5R 402

R3092 73.2K 1% 1/20W MF 201 <R2>

TBTBST_VC_RC

GND_TBTBST_SGND
MIN_LINE_WIDTH=0.5 mm
MIN_NECK_WIDTH=0.25 mm
VOLTAGE=0V

SGND shorted to GND inside package, no XW necessary.

UVLO(falling) = 1.22 * (R1 + R2) / R2
UVLO(rising) = UVLO(falling) + (2uA * R1)
UVLO = 4.55V (falling), 4.95 (rising)

Vout = 1.6V * (1 + Ra / Rb)

Q3088 DMN5L06VK-7 SOT-563 — Max Vgs: 10V — R3088 330K 5% 1/20W MF 201 — TBTBST_SHDN_DIV — R3087 330K 5% 1/20W MF 201 — Q3088 DMN5L06VK-7 SOT-563 — SMC_DELAYED_PWRGD

Supervisor & CLKREQ# Isolation

PP3V3_S0 — R3040 10K 5% 1/20W MF 201 — Q3040 DMN32D2LFB4 DFN1006H4-3 SYM_VER_3 — TBT_EN_LC_PWR

C3000 0.1UF 10% 16V X5R-CERM 0201

CRITICAL U3000 SLG4AP016V TDFN — VDD — SENSE 0.7V — DLY — RESET* — MR* — EN — OUT (OD) — IN — GND — THRM PAD

PP3V3_TBTLC — R3007 100K 1% 1/20W MF 201 — PP1V05_TBTLC

TBT_PCIE_RESET_L — DLY = 60 ms +/- 20%

PCH_TBT_PCIE_RESET_L — Platform (PCIe) Reset

TBT_CLKREQ_L — Pull-up provided by SB page.

TBT_CLKREQ_ISOL_L — TBT_CLKREQ_ISOL_L MAKE_BASE=TRUE

TBT_EN_LC_ISOL — R3011 36.5K 1% 1/20W MF 201 — TBT_EN_LC_RC3V3

3.3V TBT "LC" Switch

PP3V3_S0 — U3010 TPS22924 CSP — A2 VIN — B2 ON — C2 GND — A1 VOUT — B1 — C1 — PP3V3_TBTLC

CRITICAL

Max Current = 2A (85C)

C3010 1.0UF 20% 6.3V X5R 0201-1 — C3011 1.0UF 20% 6.3V X5R 0201-1

U3010

Part	TPS22924C
Type	Load Switch
R(on) @ 2.5V	18.5 mOhm Typ 25.8 mOhm Max

R3016 0 5% 1/20W MF 0201 — TBT_EN_LC_RC1V05

1.05V TBT "LC" Switch

PP1V05_S0 — U3015 TPS22920 CSP — A2 VIN — B2 ON — C2 GND — A1 VOUT — B1 — C1 — PP1V05_TBTLC

CRITICAL

Max Current = 4A (85C)

C3015 1.0UF 20% 6.3V X5R 0201-1 — NO STUFF C3016 1.0UF 20% 6.3V X5R 0201-1

U3015

Part	TPS22920
Type	Load Switch
R(on) @ 1.05V	6.1 mOhm Typ 10.4 mOhm Max

TBT "POC" Power-up Reset

PP3V3_S4_TBTAPWR — CRITICAL U3030 TPS3808 QFN — VDD — SENSE — CT — RESET* — MR* (IPU) — GND — THRM PAD

Pull-up: R2810

TBT_PWR_ON_POC_RST_L — TBTPOCRST_MR_L

TBTPOCRST_CT — C3031 0.0047UF 10% 25V CERM 0402 — C3030 0.1UF 10% 16V X5R-CERM 0201

TPS3808G25
Vt = 2.33V +/- 2%
Delay = 27.3ms

C3025 330PF 10% 16V X7R-CERM 0201

Q3025 DMN5L06VK-7 SOT-563 — PP3V3_S0 — R3030 100K 5% 1/20W MF 201 — TBT_POC_RESET_L

1.05V TBT "CIO" Switch

PP1V05_S0 — PP3V3_TBTLC — R3020 100K 5% 1/20W MF 201 — TBT_EN_CIO_PWR

U3020 TPS22920 CSP — A2 VIN — B2 ON — C2 GND — A1 VOUT — B1 — C1 — PP1V05_TBTCIO

CRITICAL

Max Current = 4A (85C)

C3020 1.0UF 20% 6.3V X5R 0201-1

Q3025 DMN5L06VK-7 SOT-563 — TBT_EN_CIO_PWR_L

U3020

Part	TPS22920
Type	Load Switch
R(on) @ 1.05V	6.1 mOhm Typ 10.4 mOhm Max

SYNC_MASTER=J41_MLB — SYNC_DATE=02/06/2013

PAGE TITLE: TBT Power Support

Apple Inc.

DRAWING NUMBER: <SCH_NUM> — SIZE: D
REVISION: <E4LABEL>
BRANCH: <BRANCH>
PAGE: 30 OF 121
SHEET: 27 OF 76

NOTICE OF PROPRIETARY PROPERTY:
THE INFORMATION CONTAINED HEREIN IS THE PROPRIETARY PROPERTY OF APPLE INC.
THE POSESSOR AGREES TO THE FOLLOWING:
I TO MAINTAIN THIS DOCUMENT IN CONFIDENCE
II NOT TO REPRODUCE OR COPY IT
III NOT TO REVEAL OR PUBLISH IT IN WHOLE OR PART
IV ALL RIGHTS RESERVED

WWW.AliSaler.Com

3.3V/HV Power MUX

V3P3 must be S4 to support wake from Thunderbolt device attach.

	Nominal	Min	Max	
IV3P3	1100mA	1030mA	1200mA	
IHVS0	890mA	830mA	930mA	(assumes 15V, 12W minimum)
IHVS3	890mA	830mA	930mA	(assumes 3S, 9-12.6V, 7.5-11.7W)

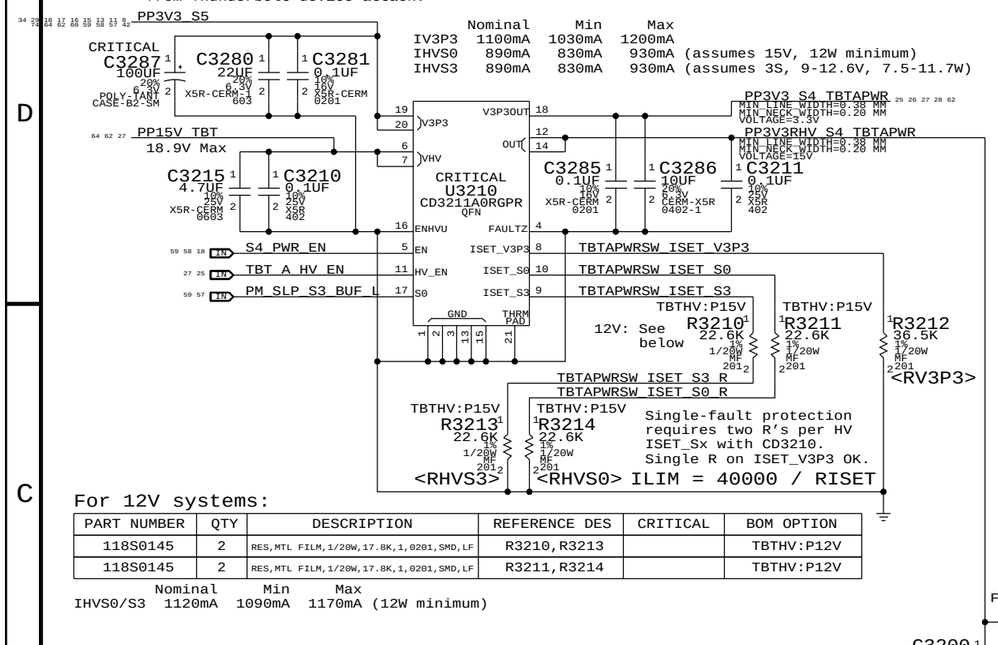

For 12V systems:

PART NUMBER	QTY	DESCRIPTION	REFERENCE DES	CRITICAL	BOM OPTION
118S0145	2	RES,MTL FILM,1/20W,17.8K,1,0201,SMD,LF	R3210,R3213		TBTHV:P12V
118S0145	2	RES,MTL FILM,1/20W,17.8K,1,0201,SMD,LF	R3211,R3214		TBTHV:P12V

	Nominal	Min	Max	
IHVS0/S3	1120mA	1090mA	1170mA	(12W minimum)

Thunderbolt Connector A

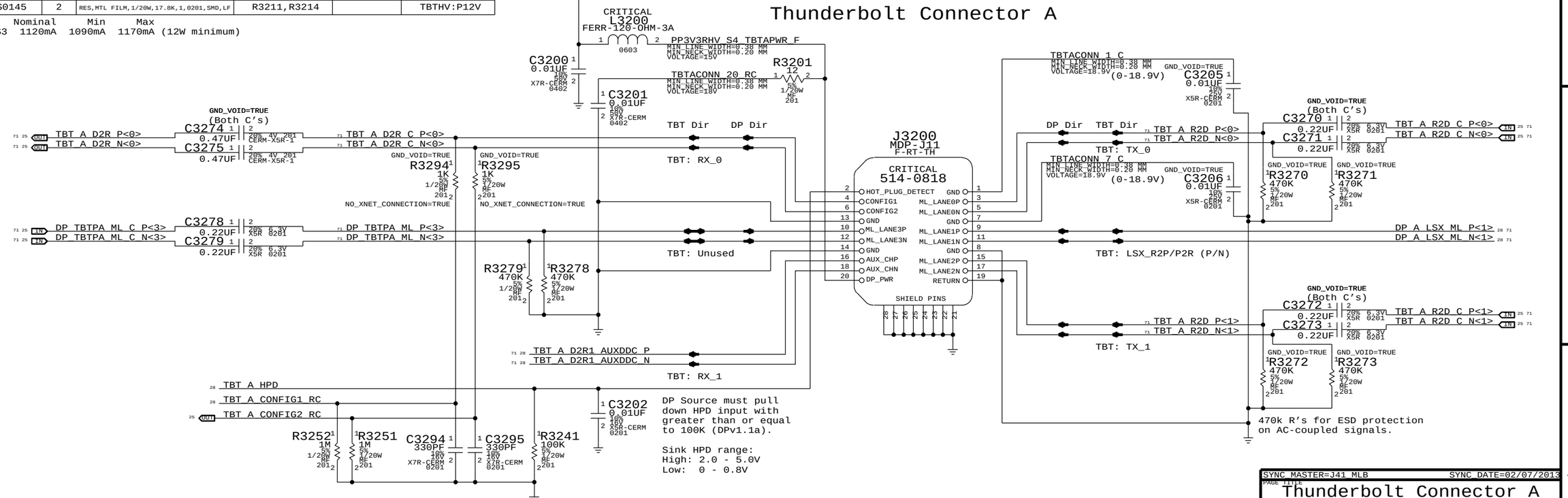

SYNC_MASTER=J41_MLB SYNC_DATE=02/07/2013

PAGE TITLE: Thunderbolt Connector A

Apple Inc.

DRAWING NUMBER: <SCH_NUM> SIZE: D

REVISION: <E4LABEL>

BRANCH: <BRANCH>

PAGE: 32 OF 121

SHEET: 28 OF 76

NOTICE OF PROPRIETARY PROPERTY:
THE INFORMATION CONTAINED HEREIN IS THE PROPRIETARY PROPERTY OF APPLE INC.
THE POSESSOR AGREES TO THE FOLLOWING:
I TO MAINTAIN THIS DOCUMENT IN CONFIDENCE
II NOT TO REPRODUCE OR COPY IT
III NOT TO REVEAL OR PUBLISH IT IN WHOLE OR PART
IV ALL RIGHTS RESERVED

WWW.AliSaler.Com

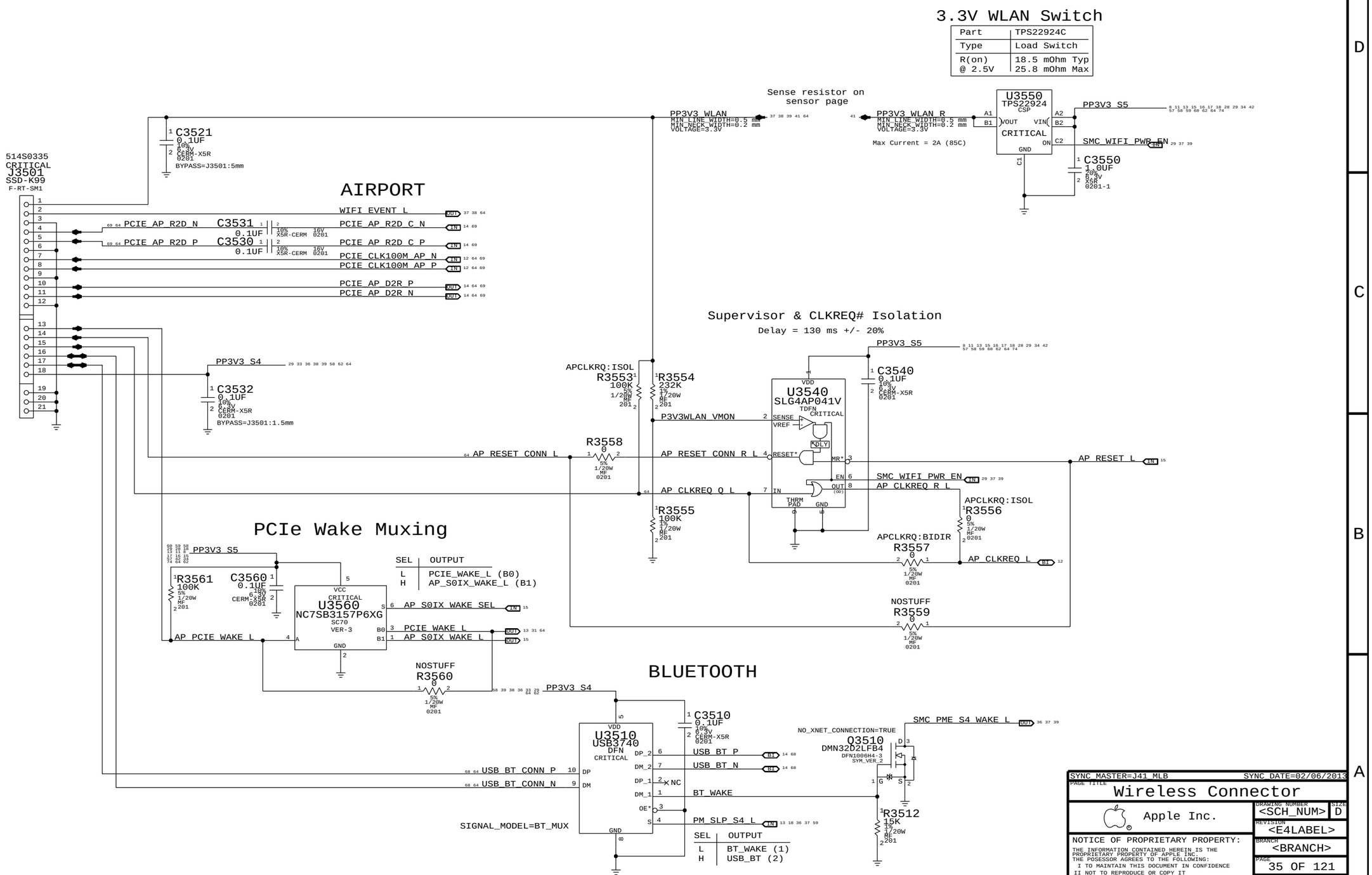

WWW.AliSaler.Com

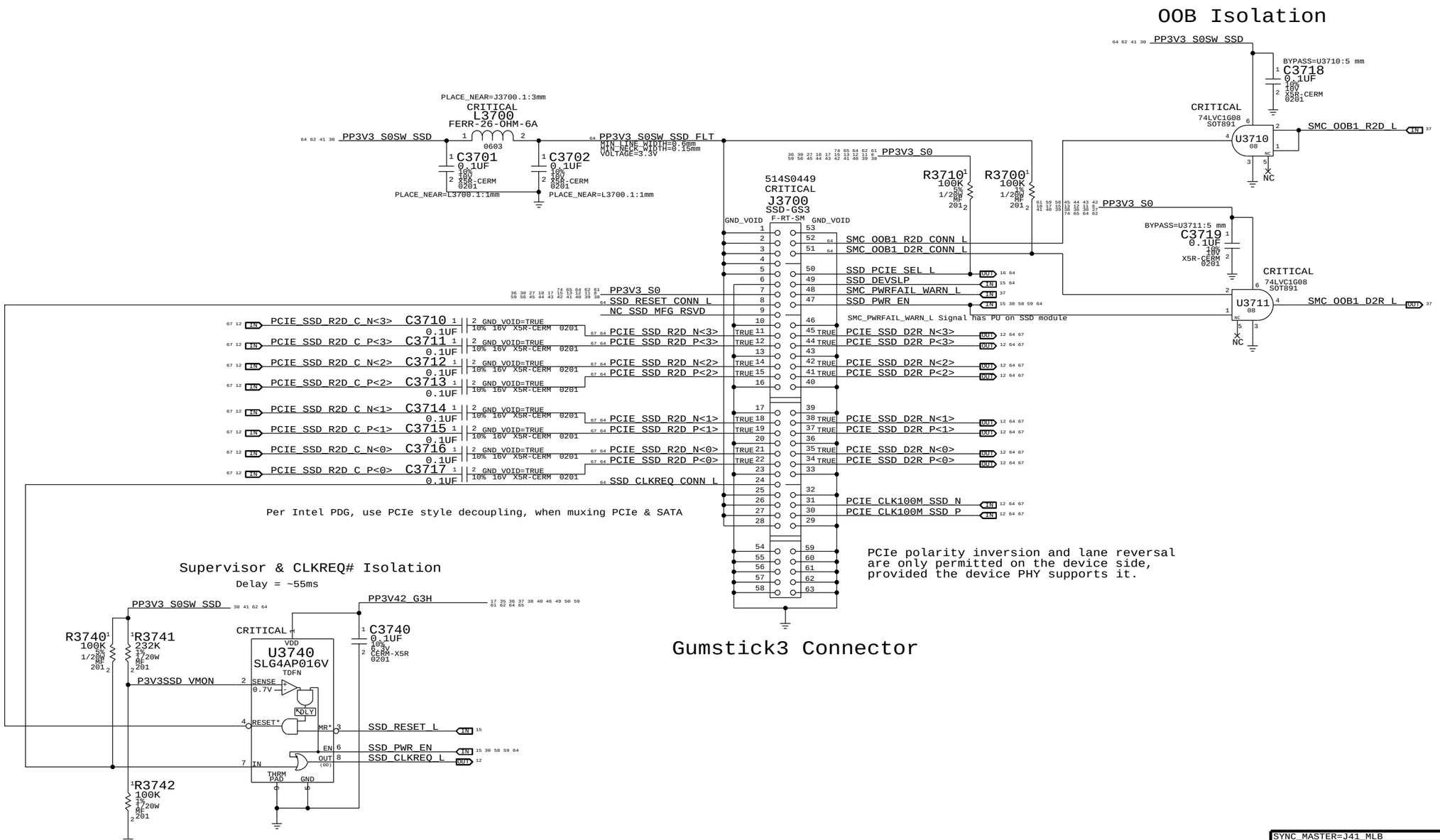

SYNC_MASTER=J41_MLB	SYNC_DATE=04/09/2013
PAGE TITLE: SSD Connector	
Apple Inc.	DRAWING NUMBER: <SCH_NUM> SIZE: D
	REVISION: <E4LABEL>
NOTICE OF PROPRIETARY PROPERTY: THE INFORMATION CONTAINED HEREIN IS THE PROPRIETARY PROPERTY OF APPLE INC. THE POSESSOR AGREES TO THE FOLLOWING: I TO MAINTAIN THIS DOCUMENT IN CONFIDENCE II NOT TO REPRODUCE OR COPY IT III NOT TO REVEAL OR PUBLISH IT IN WHOLE OR PART IV ALL RIGHTS RESERVED	BRANCH: <BRANCH>
	PAGE: 37 OF 121
	SHEET: 30 OF 76

WWW.AliSaler.Com

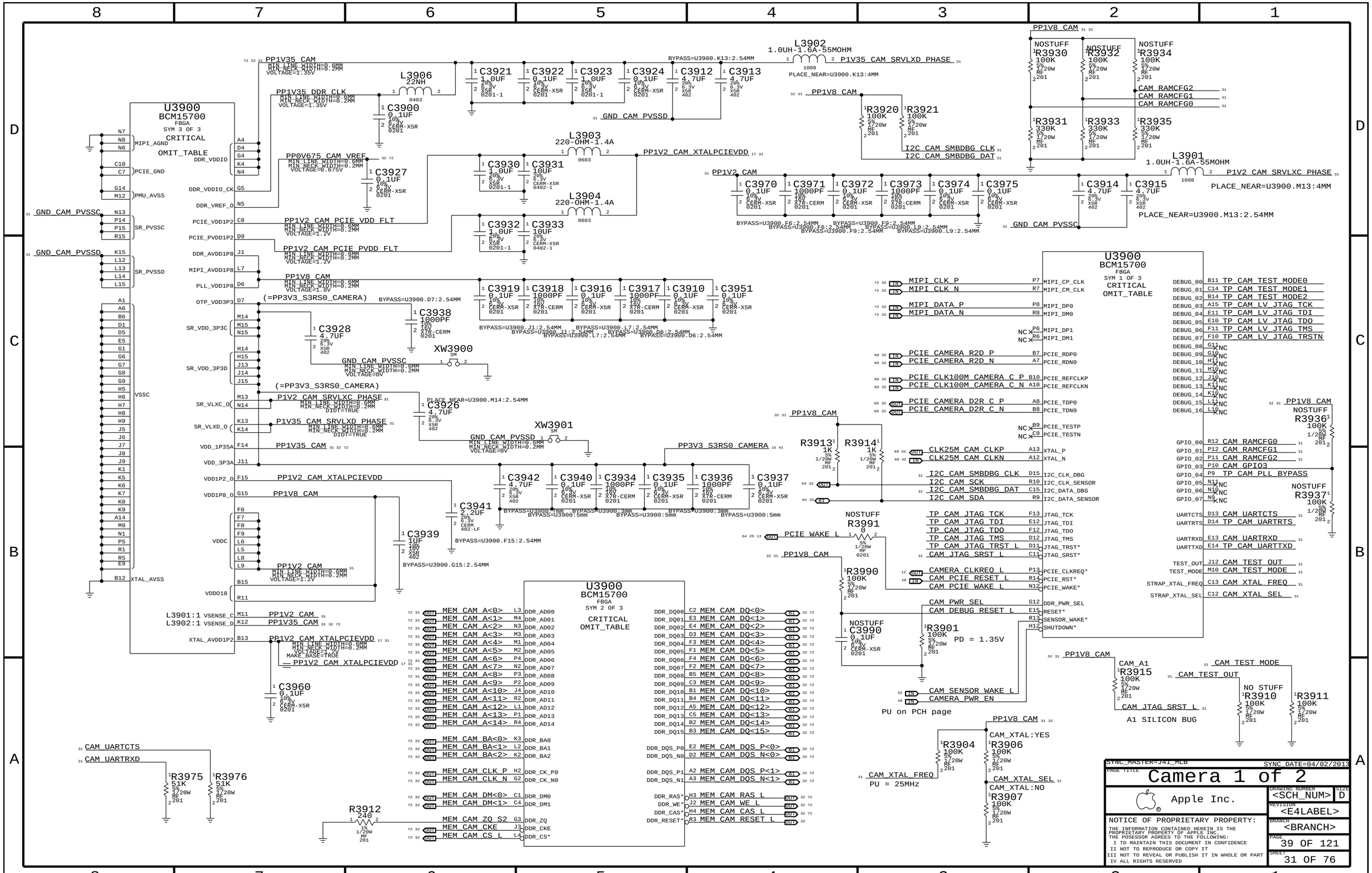

WWW.AliSaler.Com

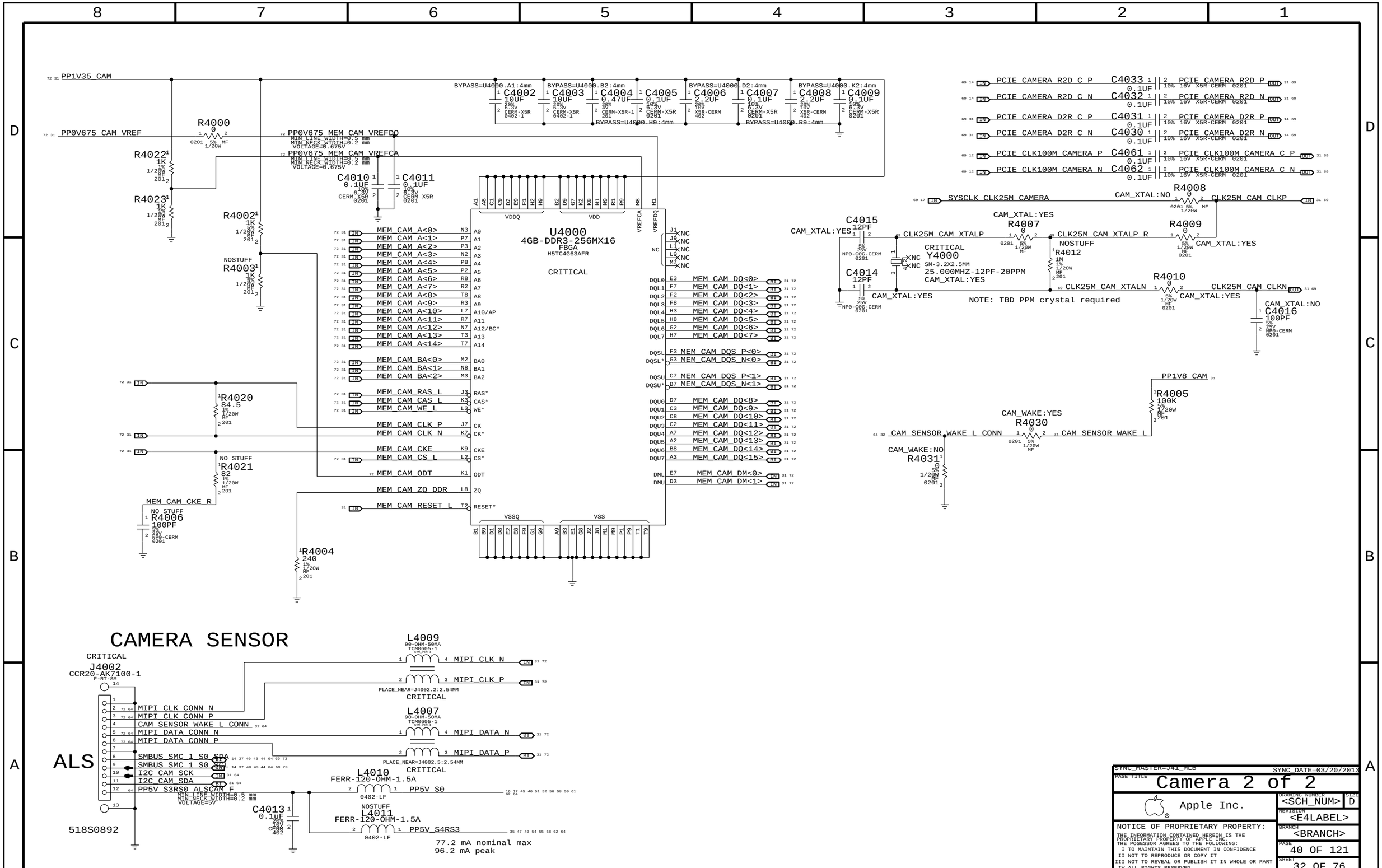

WWW.AliSaler.Com

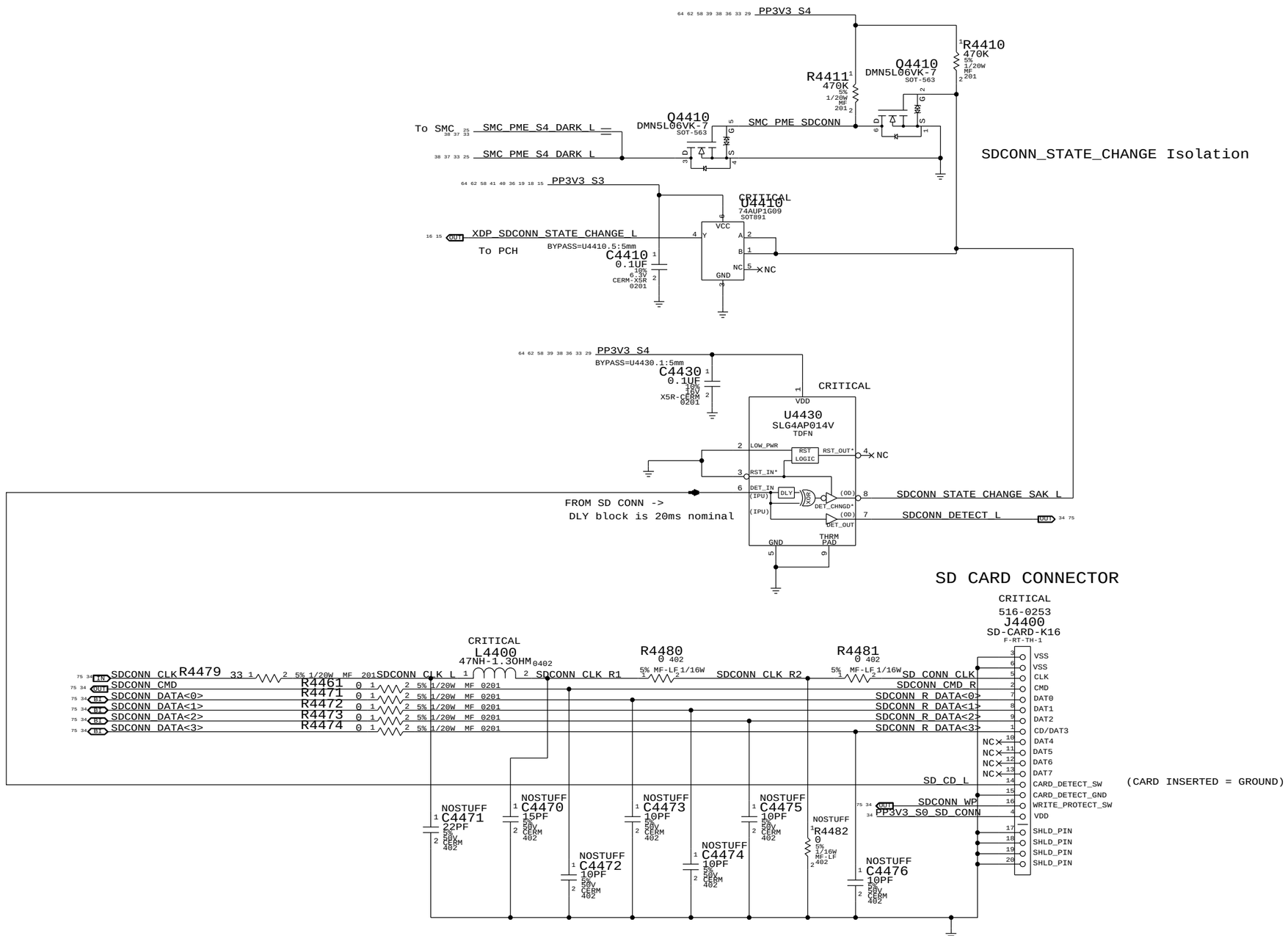

SYNC_MASTER=MASTER SYNC_DATE=07/01/2011

PAGE TITLE
SD READER CONNECTOR

Apple Inc.

DRAWING NUMBER <SCH_NUM> SIZE D

REVISION <E4LABEL>

BRANCH <BRANCH>

PAGE 44 OF 121

SHEET 33 OF 76

NOTICE OF PROPRIETARY PROPERTY:
THE INFORMATION CONTAINED HEREIN IS THE PROPRIETARY PROPERTY OF APPLE INC.
THE POSESSOR AGREES TO THE FOLLOWING:
I TO MAINTAIN THIS DOCUMENT IN CONFIDENCE
II NOT TO REPRODUCE OR COPY IT
III NOT TO REVEAL OR PUBLISH IT IN WHOLE OR PART
IV ALL RIGHTS RESERVED

WWW.AliSaler.Com

3.3V S3 SD Card Switch

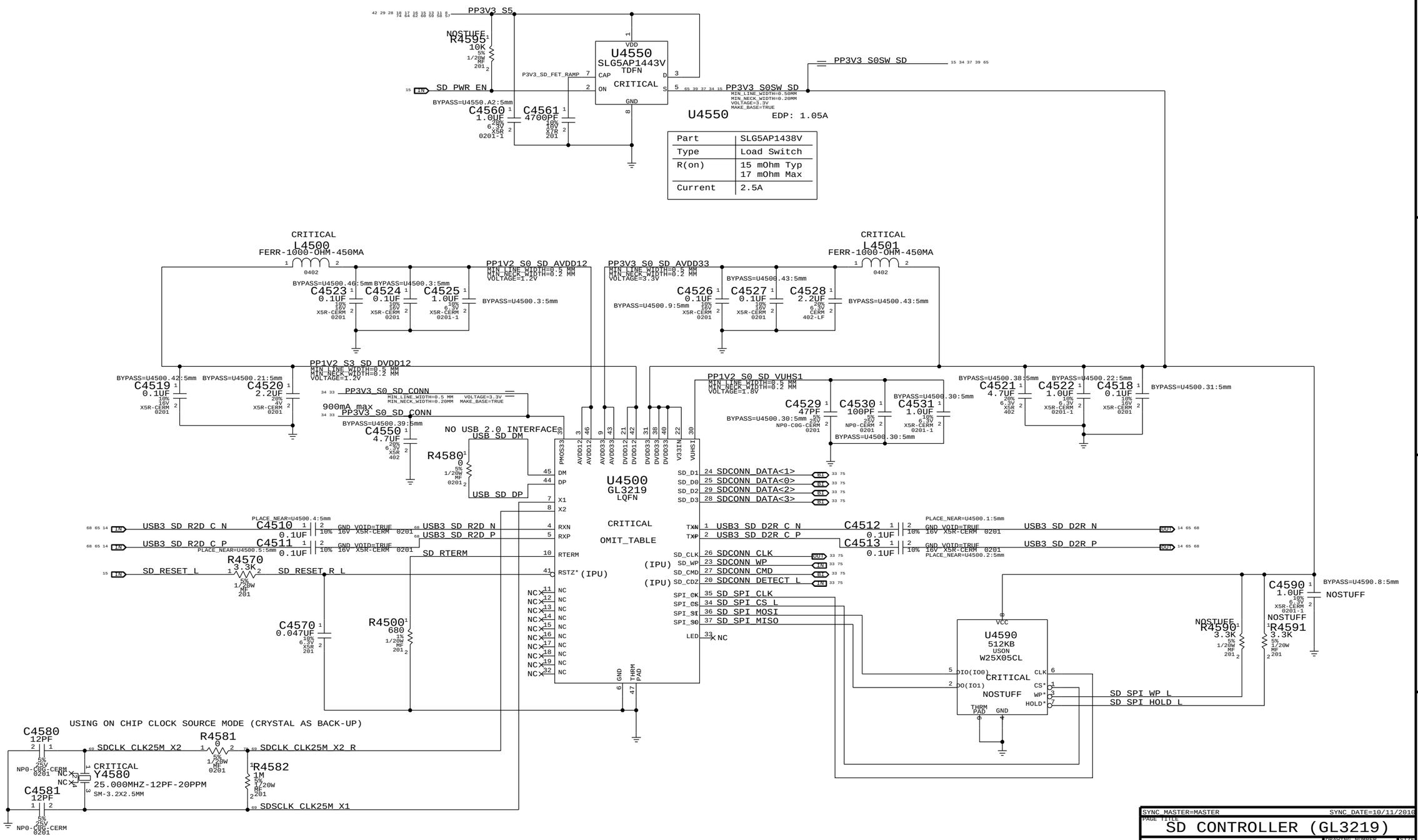

SYNC_MASTER=MASTER SYNC_DATE=10/11/2010

PAGE TITLE
SD CONTROLLER (GL3219)

Apple Inc.

DRAWING NUMBER <SCH_NUM> SIZE D

REVISION <E4LABEL>

BRANCH <BRANCH>

PAGE 45 OF 121

SHEET 34 OF 76

NOTICE OF PROPRIETARY PROPERTY:
THE INFORMATION CONTAINED HEREIN IS THE PROPRIETARY PROPERTY OF APPLE INC.
THE POSESSOR AGREES TO THE FOLLOWING:
I TO MAINTAIN THIS DOCUMENT IN CONFIDENCE
II NOT TO REPRODUCE OR COPY IT
III NOT TO REVEAL OR PUBLISH IT IN WHOLE OR PART
IV ALL RIGHTS RESERVED

WWW.AliSaler.Com

Right USB Port A

USB Port Power Switch

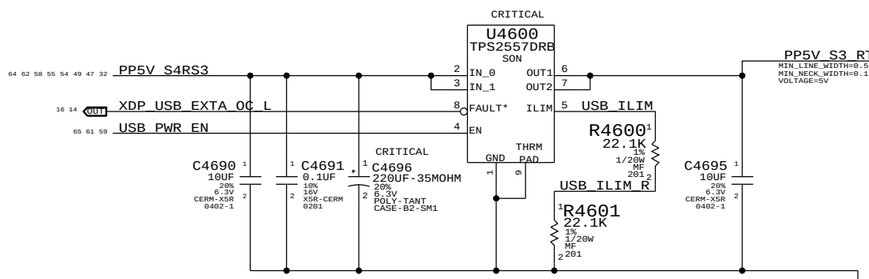

Current limit per port (R4600+R4601): 2.19A min / 2.76A max

Mojo SMC Debug Mux

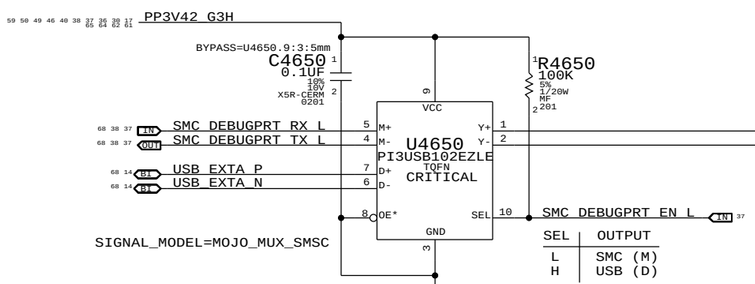

SEL	OUTPUT
L	SMC (M)
H	USB (D)

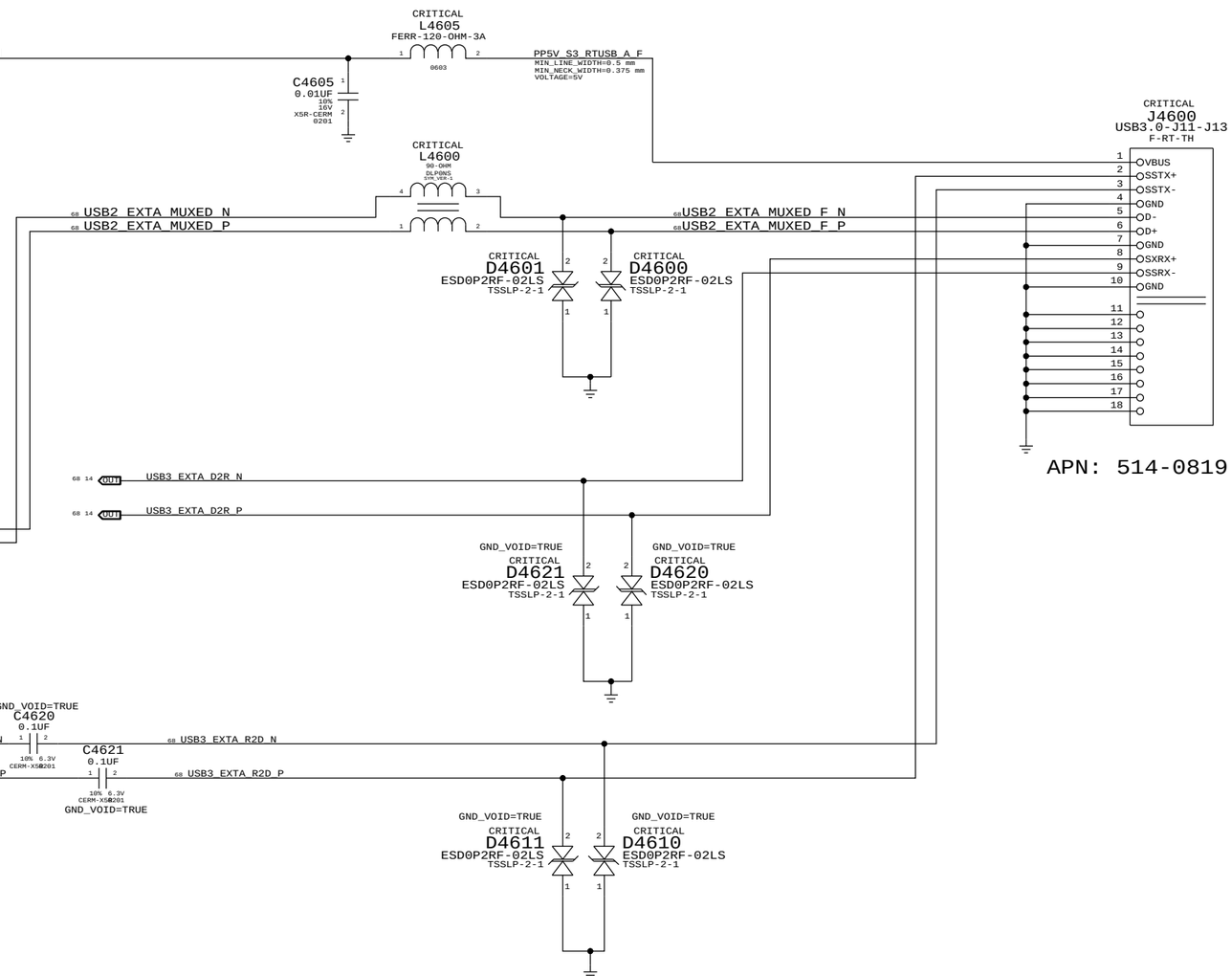

APN: 514-0819

SYNC_MASTER=J41_MLB SYNC_DATE=02/07/2013

PAGE TITLE
External A USB3 Connector

Apple Inc.

DRAWING NUMBER <SCH_NUM> SIZE D

REVISION <E4LABEL>

BRANCH <BRANCH>

PAGE 46 OF 121

SHEET 35 OF 76

NOTICE OF PROPRIETARY PROPERTY:
THE INFORMATION CONTAINED HEREIN IS THE PROPRIETARY PROPERTY OF APPLE INC.
THE POSESSOR AGREES TO THE FOLLOWING:
I TO MAINTAIN THIS DOCUMENT IN CONFIDENCE
II NOT TO REPRODUCE OR COPY IT
III NOT TO REVEAL OR PUBLISH IT IN WHOLE OR PART
IV ALL RIGHTS RESERVED

WWW.AliSaler.Com

IPD Flex Connector

PP3V3_S4 — R4830 0 (5% 1/20W MF 0201) — C4800 0.1UF (10% 6.3V CERM-X5R 0201) — VOLTAGE=3.3V, MIN_NECK_WIDTH=0.2 mm, MIN_LINE_WIDTH=0.5 mm

PP5V_S5 — L4820 FERR-120-OHM-1.5A (0402-LF) — MIN_LINE_WIDTH=0.5 mm, MIN_NECK_WIDTH=0.2 mm, VOLTAGE=5V

C4810 0.1UF (10% 16V X5R-CERM 0201)

PP3V42_G3H — C4820 0.1UF (10% 6.3V CERM-X5R 0201)

TPAD_INTWAKE:SPLIT — R4841 0 (5% 1/20W MF 0201) — (TPAD_WAKE_L)

TPAD_INTWAKE:SHARED — R4843 0 (5% 1/20W MF 0201) — SMC_PME_S4_WAKE_L (To SMC) — (TPAD_SPI_INT_S4_WAKE_L_CONN)

TPAD_INTWAKE:SHARED — R4844 0 (5% 1/20W MF 0201)

TPAD_INTWAKE:SHARED — Q4800 DMN32D2LFB4 (DFN1006H4-3, SYM_VER_3) — PP3V3_S3 — TPAD_SPI_INT_L (To PCH)

TPAD_INTWAKE:SPLIT — R4842 0 (5% 1/20W MF 0201)

PP3V3_S4 — C4841 0.1UF (10% 6.3V CERM-X5R 0201) — BYPASS=U4810:3mm

CRITICAL — U4810 74LVC2G08GT SOT833 — PM_SLP_S4_L — TPAD_USB_IF_EN (From PCH) — (TPAD_USB_IF_EN_CONN)

NOSTUFF — R4810 100K (5% 1/20W MF 201)

CKPLUS_WAIVE=UNCONNECTED_PINS

U4810 74LVC2G08GT SOT833 — PM_SLP_S4_L — TPAD_SPI_IF_EN (From PCH) — (TPAD_SPI_IF_EN_CONN)

CKPLUS_WAIVE=UNCONNECTED_PINS

PP3V3_S3 — R4860 100K (5% 1/20W MF 201) — TPAD_SPI_CS_CONN_L

Q4860 DMN32D2LFB4 (DFN1006H4-3, SYM_VER_3) — PP3V3_S0 — TPAD_SPI_CS_L

R4850 33 (5% 1/20W MF 201) — TPAD_SPI_MISO

R4851 33 (5% 1/20W MF 201) — TPAD_SPI_CLK

R4852 33 (5% 1/20W MF 201) — TPAD_SPI_MOSI

R4853 33 (5% 1/20W MF 201)

CRITICAL 518S0884 J4800 TF13BS-20S-0.4SH (F-RT-SM-1)

Pin	Signal
1	SMC_LID
2	TPAD_SPI_MISO_R
3	
4	USB_TPAD_P
5	USB_TPAD_N
6	
7	TPAD_SPI_CLK_R
8	TPAD_WAKE_L
9	TPAD_SPI_MOSI_R
10	PP3V3_S4_IPD
11	TPAD_SPI_CS_R_L
12	TPAD_SPI_IF_EN_CONN
13	TPAD_SPI_INT_S4_WAKE_L_CONN
14	PP5V_S4_IPD
15	TPAD_USB_IF_EN_CONN
16	SMBUS_SMC_3_SDA
17	SMBUS_SMC_3_SCL
18	SMC_LSOC_RST_L
19	(=PP3V42_G3H_IPD)
20	SMC_ONOFF_L
21	
22	

SMBUS_SMC_3_SDA, SMBUS_SMC_3_SCL, SMC_ONOFF_L, SMC_LID, SMC_LSOC_RST_L

NOSTUFF C4832 100PF (5% 25V NP0-CERM 0201) — BYPASS=J4800.6:1.5MM
NOSTUFF C4833 100PF (5% 25V NP0-CERM 0201) — BYPASS=J4800.5:1.5MM
C4834 100PF (5% 25V NP0-CERM 0201) — BYPASS=J4800.4:1.5MM
C4835 100PF (5% 25V NP0-CERM 0201) — BYPASS=J4800.3:1.5MM
C4836 100PF (5% 25V NP0-CERM 0201) — BYPASS=J4800.1:1.5MM

SYNC_MASTER=J41_MLB SYNC_DATE=02/12/2013

PAGE TITLE: IPD Connector

Apple Inc.

DRAWING NUMBER: <SCH_NUM> SIZE: D
REVISION: <E4LABEL>
BRANCH: <BRANCH>
PAGE: 48 OF 121
SHEET: 36 OF 76

NOTICE OF PROPRIETARY PROPERTY:
THE INFORMATION CONTAINED HEREIN IS THE PROPRIETARY PROPERTY OF APPLE INC.
THE POSESSOR AGREES TO THE FOLLOWING:
I TO MAINTAIN THIS DOCUMENT IN CONFIDENCE
II NOT TO REPRODUCE OR COPY IT
III NOT TO REVEAL OR PUBLISH IT IN WHOLE OR PART
IV ALL RIGHTS RESERVED

WWW.AliSaler.Com

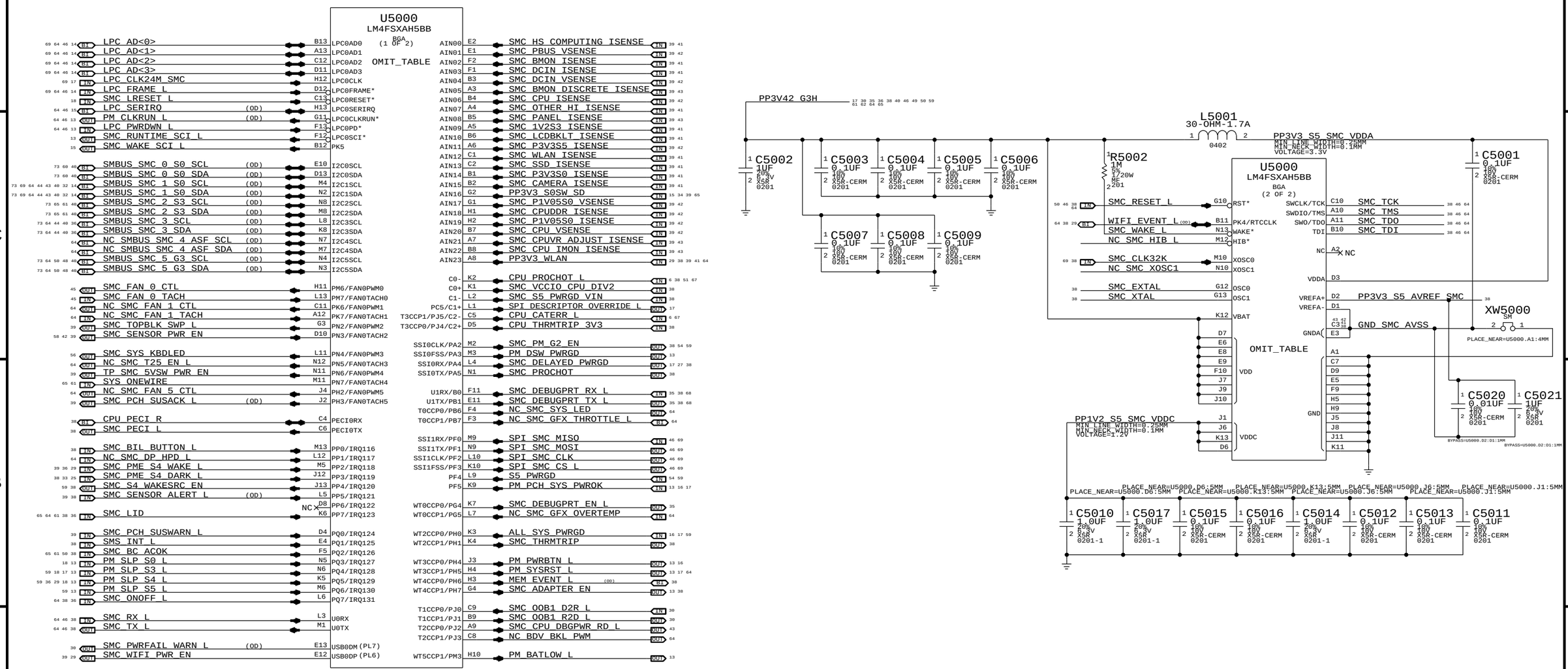

NOTE:
SMS Interrupt can be active high or low, rename net accordingly.
If SMS interrupt is not used, pull up to SMC rail.

NOTE:
Unused pins have "SMC_Pxx" names. Unused
pins designed as outputs can be left floating,
those designated as inputs require pull-ups.

SYNC_MASTER=J41_MLB SYNC_DATE=02/06/2013

PAGE TITLE: SMC

Apple Inc.

DRAWING NUMBER: <SCH_NUM> SIZE: D

REVISION: <E4LABEL>

BRANCH: <BRANCH>

PAGE: 50 OF 121

SHEET: 37 OF 76

NOTICE OF PROPRIETARY PROPERTY:
THE INFORMATION CONTAINED HEREIN IS THE PROPRIETARY PROPERTY OF APPLE INC.
THE POSESSOR AGREES TO THE FOLLOWING:
I TO MAINTAIN THIS DOCUMENT IN CONFIDENCE
II NOT TO REPRODUCE OR COPY IT
III NOT TO REVEAL OR PUBLISH IT IN WHOLE OR PART
IV ALL RIGHTS RESERVED

WWW.AliSaler.Com

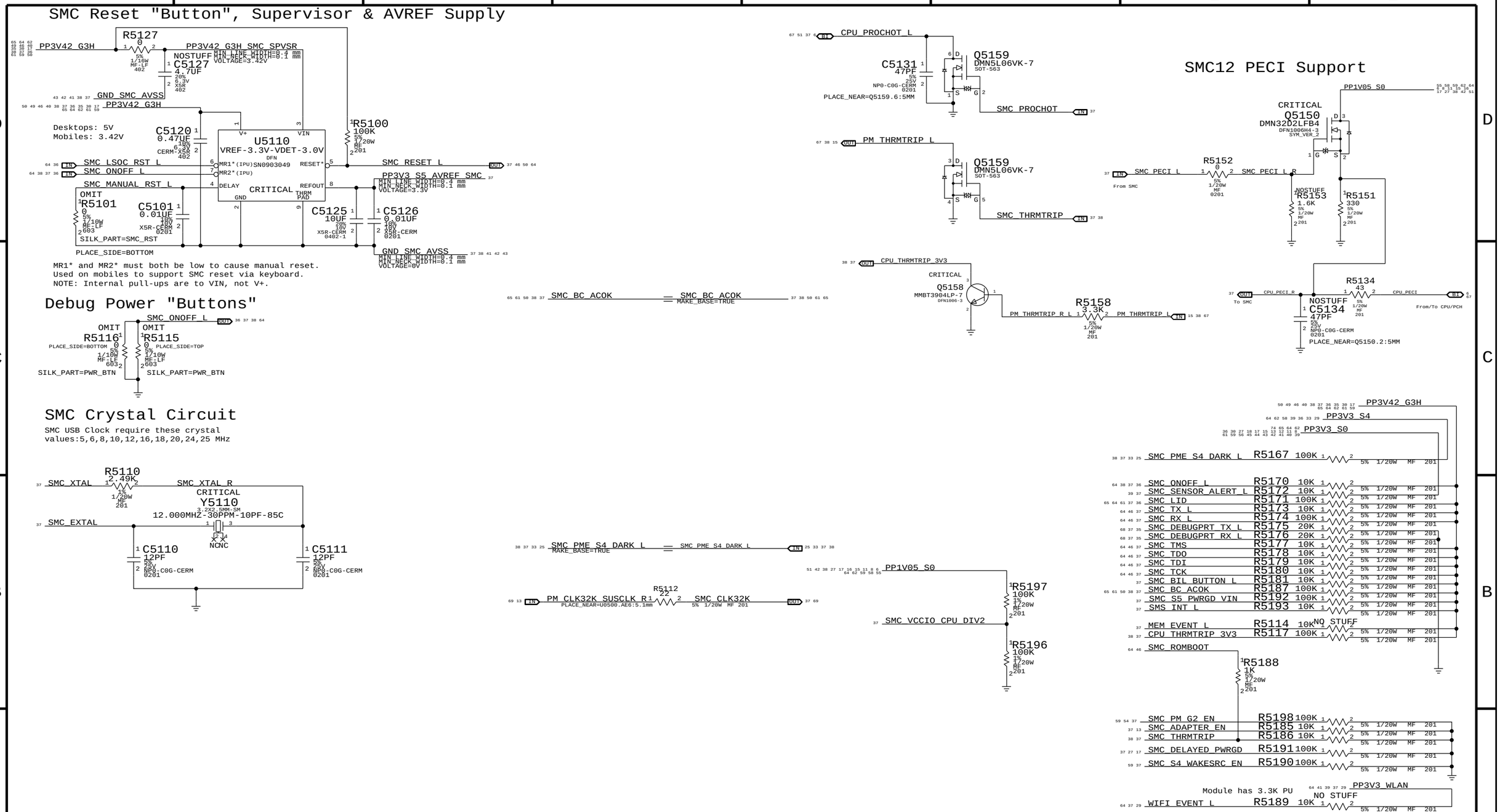

SYNC_MASTER=J41_MLB SYNC_DATE=02/06/2013

PAGE TITLE
SMC Shared Support

Apple Inc.

DRAWING NUMBER <SCH_NUM> SIZE D

REVISION <E4LABEL>

BRANCH <BRANCH>

PAGE 51 OF 121

SHEET 38 OF 76

NOTICE OF PROPRIETARY PROPERTY:
THE INFORMATION CONTAINED HEREIN IS THE PROPRIETARY PROPERTY OF APPLE INC.
THE POSESSOR AGREES TO THE FOLLOWING:
I TO MAINTAIN THIS DOCUMENT IN CONFIDENCE
II NOT TO REPRODUCE OR COPY IT
III NOT TO REVEAL OR PUBLISH IT IN WHOLE OR PART
IV ALL RIGHTS RESERVED

WWW.AliSaler.Com

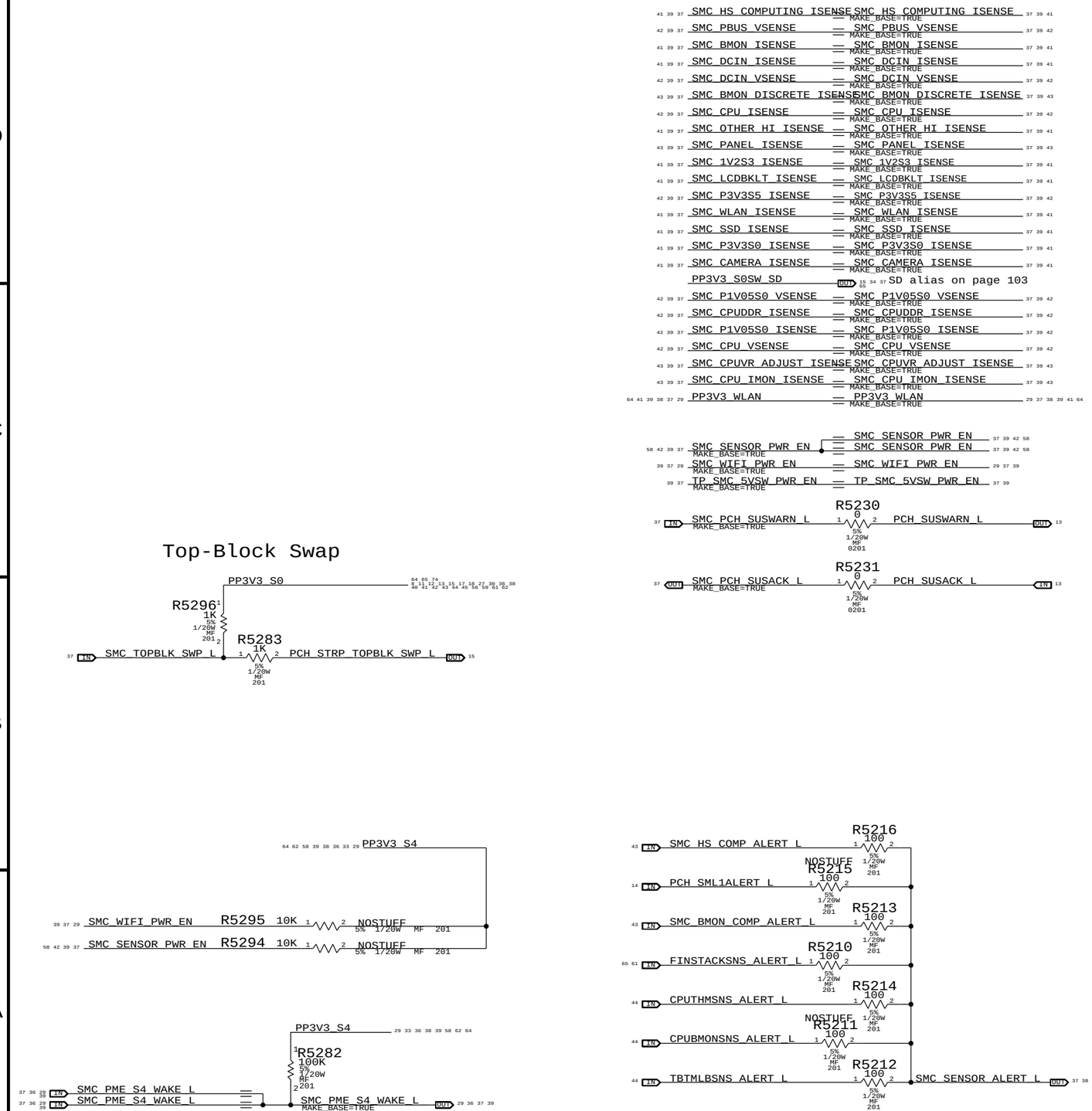

SYNC_MASTER=J41_MLB SYNC_DATE=02/06/2013

PAGE TITLE

SMC Project Support

Apple Inc.

DRAWING NUMBER <SCH_NUM> SIZE D

REVISION <E4LABEL>

BRANCH <BRANCH>

PAGE 52 OF 121

SHEET 39 OF 76

NOTICE OF PROPRIETARY PROPERTY:
THE INFORMATION CONTAINED HEREIN IS THE PROPRIETARY PROPERTY OF APPLE INC.
THE POSESSOR AGREES TO THE FOLLOWING:
I TO MAINTAIN THIS DOCUMENT IN CONFIDENCE
II NOT TO REPRODUCE OR COPY IT
III NOT TO REVEAL OR PUBLISH IT IN WHOLE OR PART
IV ALL RIGHTS RESERVED

WWW.AliSaler.Com

LYNX POINT LP S0 SMBus "0" Connections

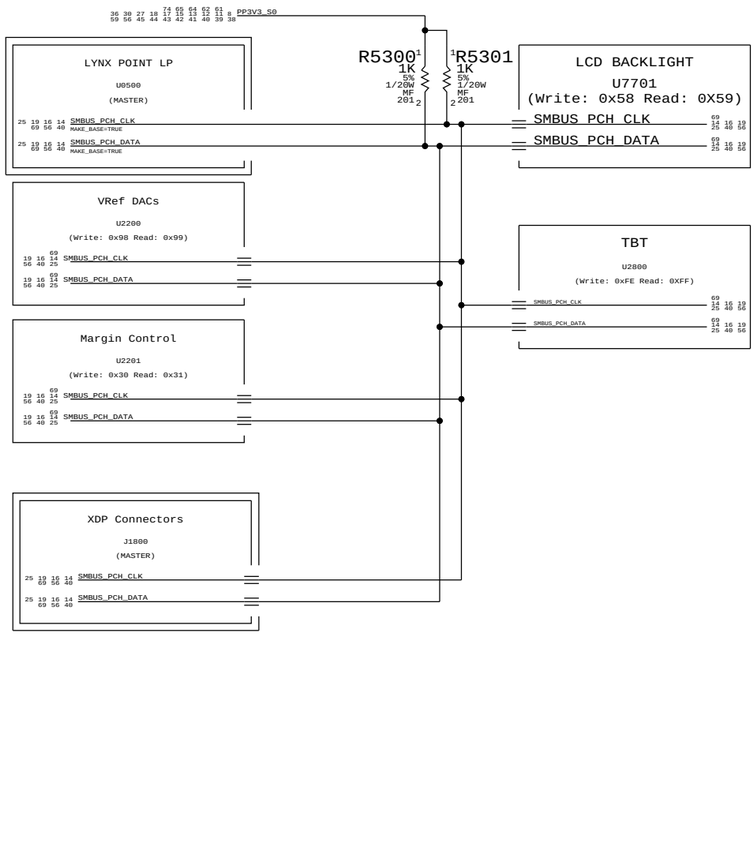

SMC "0" SMBus S0 Connections

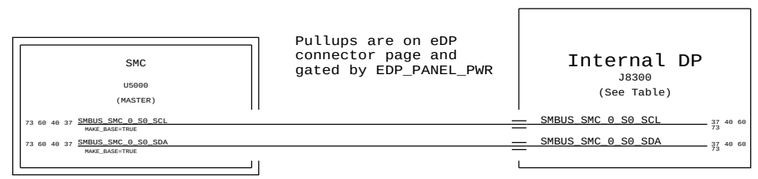

(* = Multiple options)

Internal DP

		J43		J41		
		Samsung	LGD	Samsung	LGD	AUO
Analogix T-con	- (Write: 0x7B/0x87 Read: 0x7C/0x88)	N	Y	*	Y	*
Parade T-con	- (0x10-0x1F or 0x30-0x3F)	Y	N	*	N	*
DVR	- (Write: 0x4E Read: 0x4F)	Y	Y	Y	Y	N

SMC "5" SMBus G3H Connections

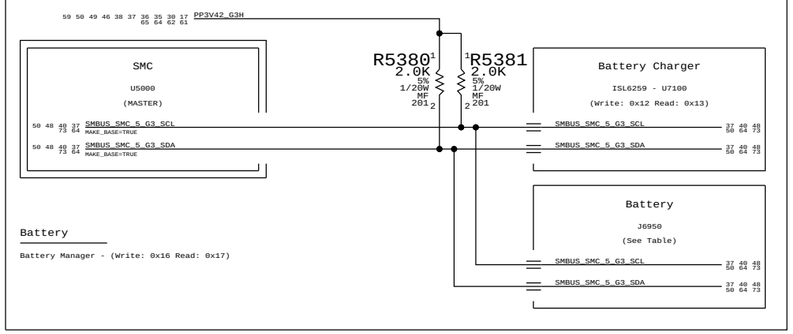

Battery

Battery Manager - (Write: 0x16 Read: 0x17)

SMC "3" SMBus S0 Connections

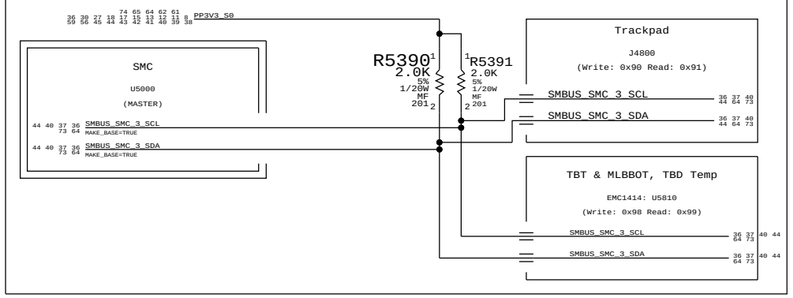

SMC "2" SMBus S3 Connections

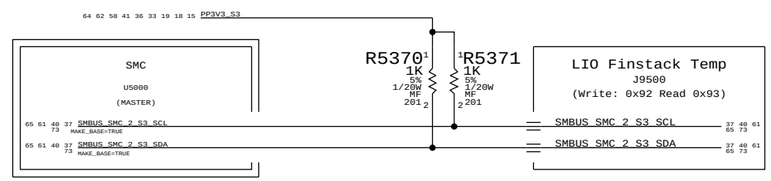

LYNX POINT LP S0 "SMLink 0" Connections

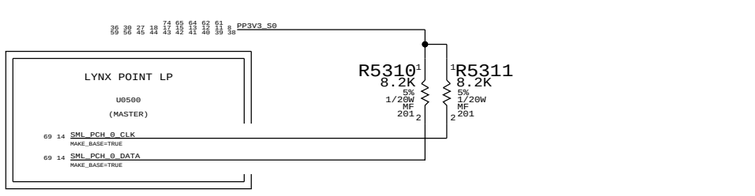

LYNX POINT LP S0 "SMLink 1" Connections

SMLink 1 is slave port to access PCH

SMC S0 "1" SMBus Connections

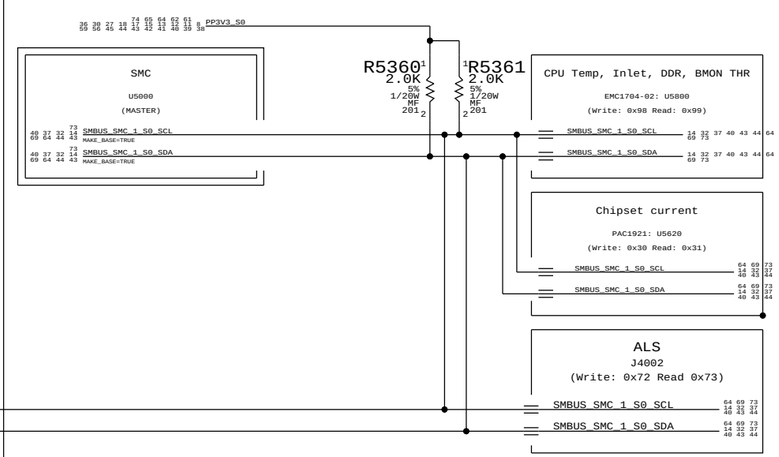

SYNC_MASTER=J41_MLB SYNC_DATE=02/06/2013

PAGE TITLE
SMBus Connections

Apple Inc.

DRAWING NUMBER <SCH_NUM> SIZE D
REVISION <E4LABEL>
BRANCH <BRANCH>
PAGE 53 OF 121
SHEET 40 OF 76

NOTICE OF PROPRIETARY PROPERTY:
THE INFORMATION CONTAINED HEREIN IS THE PROPRIETARY PROPERTY OF APPLE INC.
THE POSESSOR AGREES TO THE FOLLOWING:
I TO MAINTAIN THIS DOCUMENT IN CONFIDENCE
II NOT TO REPRODUCE OR COPY IT
III NOT TO REVEAL OR PUBLISH IT IN WHOLE OR PART
IV ALL RIGHTS RESERVED

WWW.AliSaler.Com

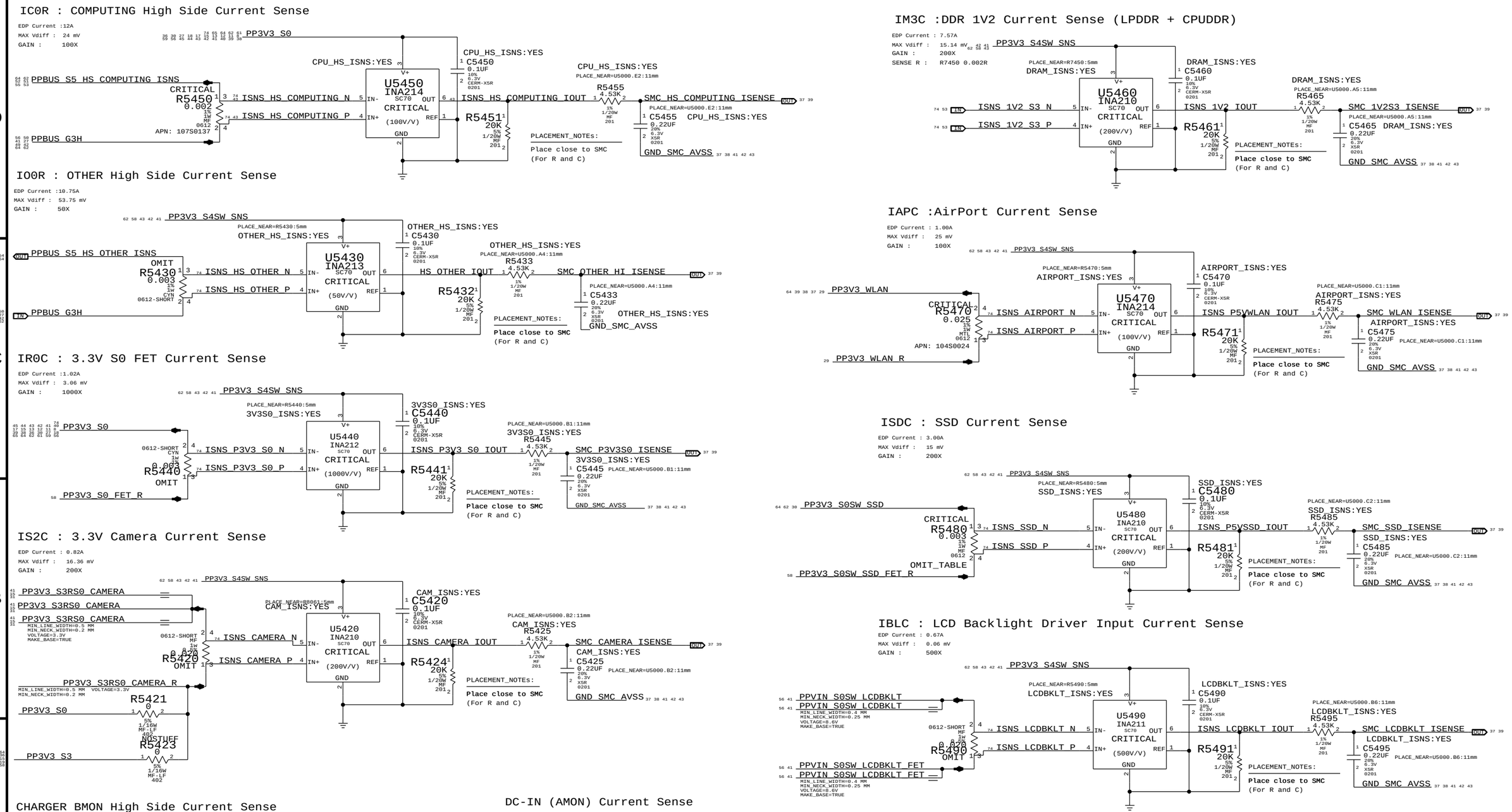

PART NUMBER	QTY	DESCRIPTION	REFERENCE DES	CRITICAL	BOM OPTION
107S0248	1	RES,SENSE,0.0030HM,1W,4-TERM,1%,0612,TFT	R5480	CRITICAL	

Replacing caps with 100K PD on ISENSE SMC inputs

PART NUMBER	QTY	DESCRIPTION	REFERENCE DES	CRITICAL	BOM OPTION
117S0008	1	RES,MF,1/20W,100K OHM,5,0201,SMD	C5455		CPU_HS_ISNS:NO
117S0008	1	RES,MF,1/20W,100K OHM,5,0201,SMD	C5465		DRAM_ISNS:NO
117S0008	1	RES,MF,1/20W,100K OHM,5,0201,SMD	C5475		AIRPORT_ISNS:NO
117S0008	1	RES,MF,1/20W,100K OHM,5,0201,SMD	C5485		SSD_ISNS:NO
117S0008	1	RES,MF,1/20W,100K OHM,5,0201,SMD	C5495		LCDBKLT_ISNS:NO
117S0008	1	RES,MF,1/20W,100K OHM,5,0201,SMD	C5433		OTHER_HS_ISNS:NO
117S0008	1	RES,MF,1/20W,100K OHM,5,0201,SMD	C5425		CAM_ISNS:NO
117S0008	1	RES,MF,1/20W,100K OHM,5,0201,SMD	C5445		3V3S0_ISNS:NO

SYNC_MASTER=J41_MLB SYNC_DATE=03/28/2013

PAGE TITLE
High Side Current Sensing

Apple Inc.

DRAWING NUMBER <SCH_NUM> SIZE D
REVISION <E4LABEL>
BRANCH <BRANCH>
PAGE 54 OF 121
SHEET 41 OF 76

NOTICE OF PROPRIETARY PROPERTY:
THE INFORMATION CONTAINED HEREIN IS THE PROPRIETARY PROPERTY OF APPLE INC.
THE POSESSOR AGREES TO THE FOLLOWING:
I TO MAINTAIN THIS DOCUMENT IN CONFIDENCE
II NOT TO REPRODUCE OR COPY IT
III NOT TO REVEAL OR PUBLISH IT IN WHOLE OR PART
IV ALL RIGHTS RESERVED

WWW.AliSaler.Com

VP0R: PBUS Voltage Sense Enable & Filter

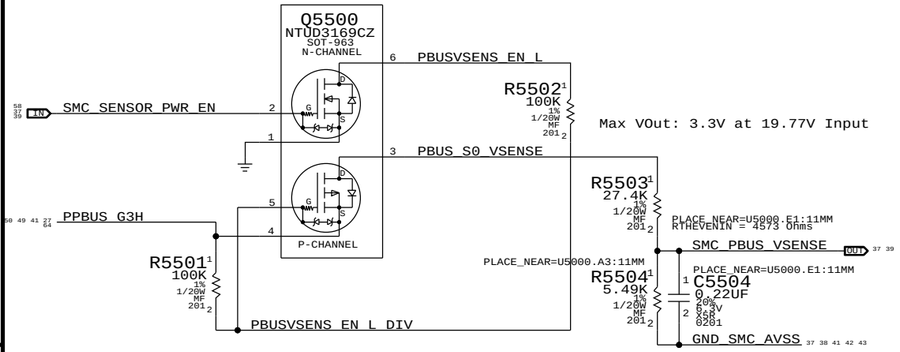

VD0R: DC-In Voltage Sense Enable & Filter

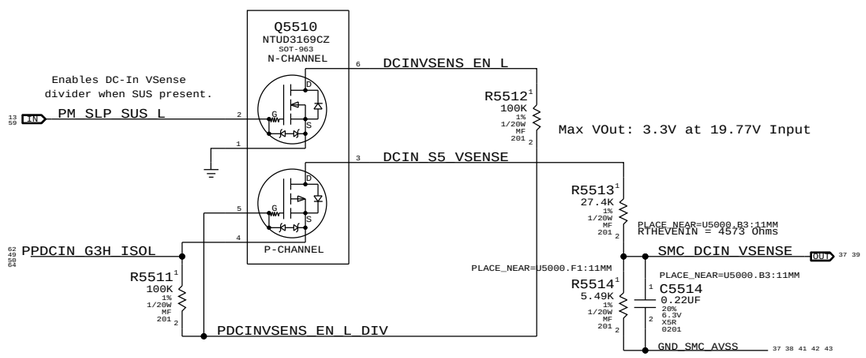

CPU Vcore Voltage Sense / Filter

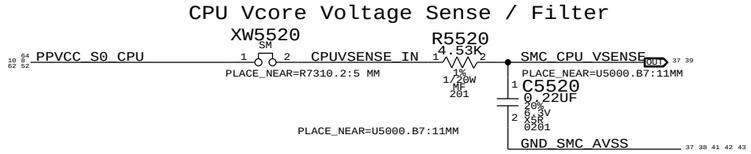

1.05V Voltage Sense / Filter

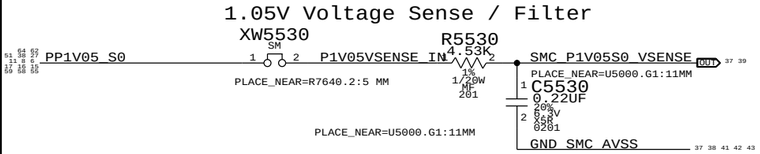

IC1C: 1.05V S0 CURRENT SENSE / FILTER

EDP Current : 1A
MAX Vdiff : 5.65 mV
GAIN : 500X

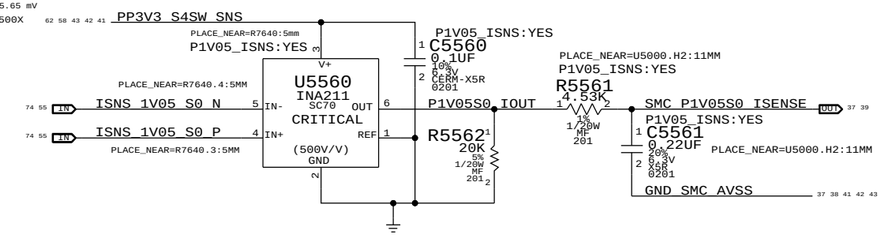

ICS0 : CPU VCore Load Side Current Sense

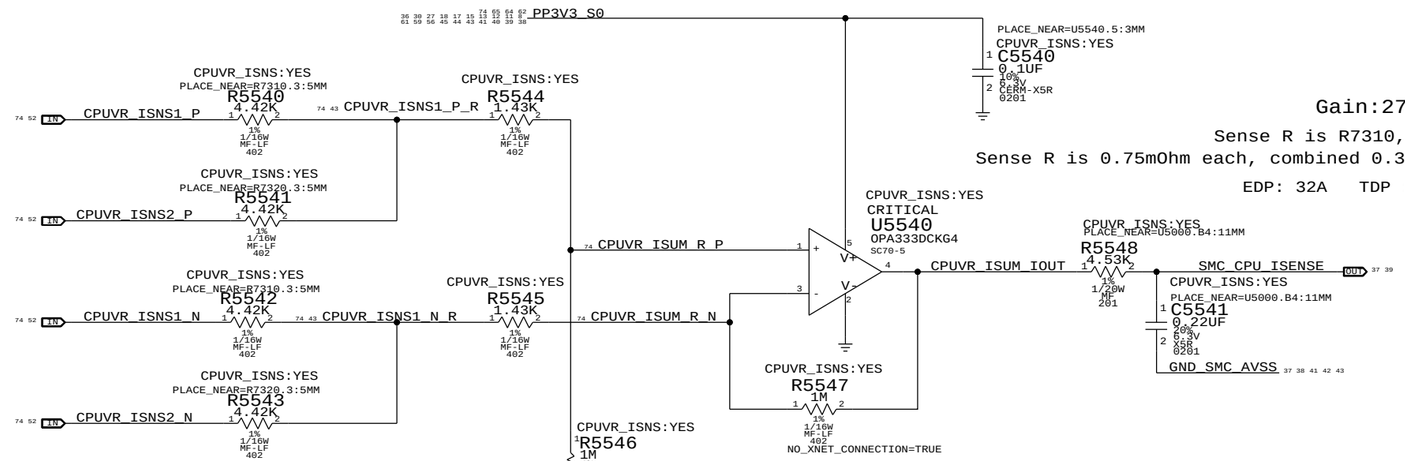

Gain:274.72x
Sense R is R7310, R7320
Sense R is 0.75mOhm each, combined 0.375mOhm
EDP: 32A TDP :28.05A

IM0C : CPU DDR Current Sense

EDP Current : 3.00A
MAX Vdiff : 12.60 mV
GAIN : 200X

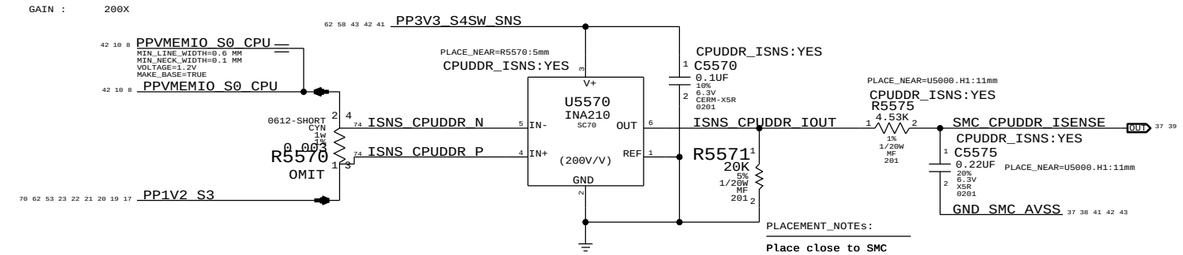

IR5C :3.3 S5 REG Current Sense

EDP Current : 3.00A
MAX Vdiff : 30.00 mV
GAIN : 100X

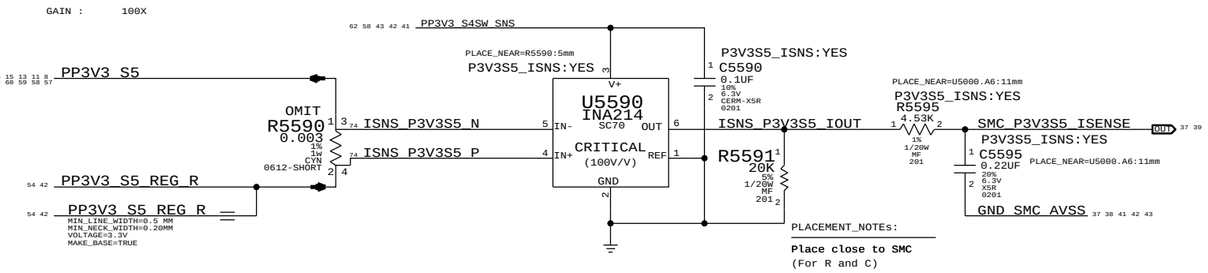

Replacing caps with 100K PD on ISENSE SMC inputs

PART NUMBER	QTY	DESCRIPTION	REFERENCE DES	CRITICAL	BOM OPTION
117S0008	1	RES,MF,1/20W,100K OHM,5,0201,SMD	C5541		CPUVR_ISNS:NO
117S0008	1	RES,MF,1/20W,100K OHM,5,0201,SMD	C5561		P1V05_ISNS:NO
117S0008	1	RES,MF,1/20W,100K OHM,5,0201,SMD	C5595		P3V3S5_ISNS:NO
117S0008	1	RES,MF,1/20W,100K OHM,5,0201,SMD	C5575		CPUDDR_ISNS:NO

SYNC_MASTER=J41_MLB SYNC_DATE=03/28/2013

PAGE TITLE
Voltage & Load Side Current Sensing

Apple Inc.

DRAWING NUMBER <SCH_NUM> SIZE D
REVISION <E4LABEL>
BRANCH <BRANCH>
PAGE 55 OF 121
SHEET 42 OF 76

NOTICE OF PROPRIETARY PROPERTY:
THE INFORMATION CONTAINED HEREIN IS THE PROPRIETARY PROPERTY OF APPLE INC.
THE POSESSOR AGREES TO THE FOLLOWING:
I TO MAINTAIN THIS DOCUMENT IN CONFIDENCE
II NOT TO REPRODUCE OR COPY IT
III NOT TO REVEAL OR PUBLISH IT IN WHOLE OR PART
IV ALL RIGHTS RESERVED

WWW.AliSaler.Com

ICS3 : Adjustable Gain CPU VR Current

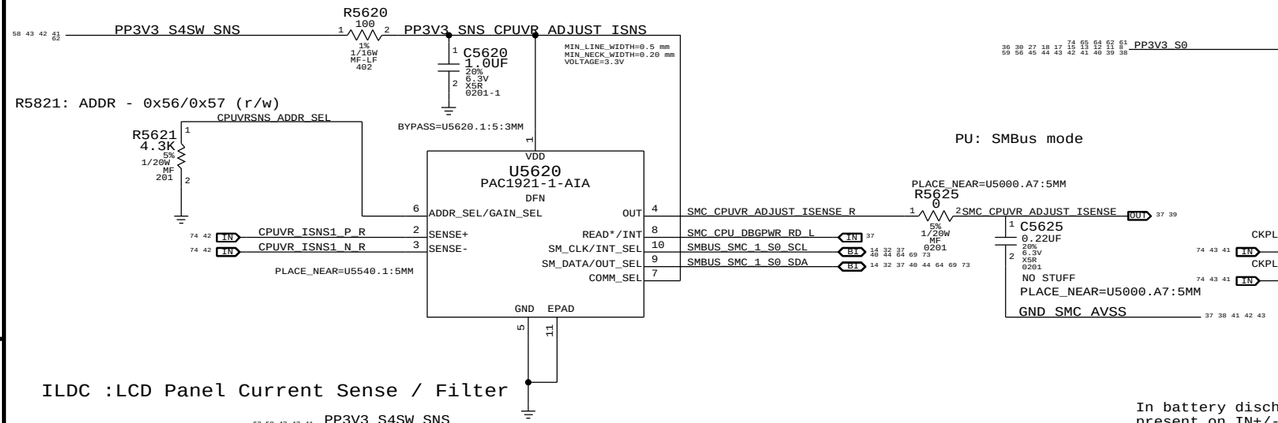

PU: SMBus mode

Sense Pins gain stage for U5800 (EMC1704)

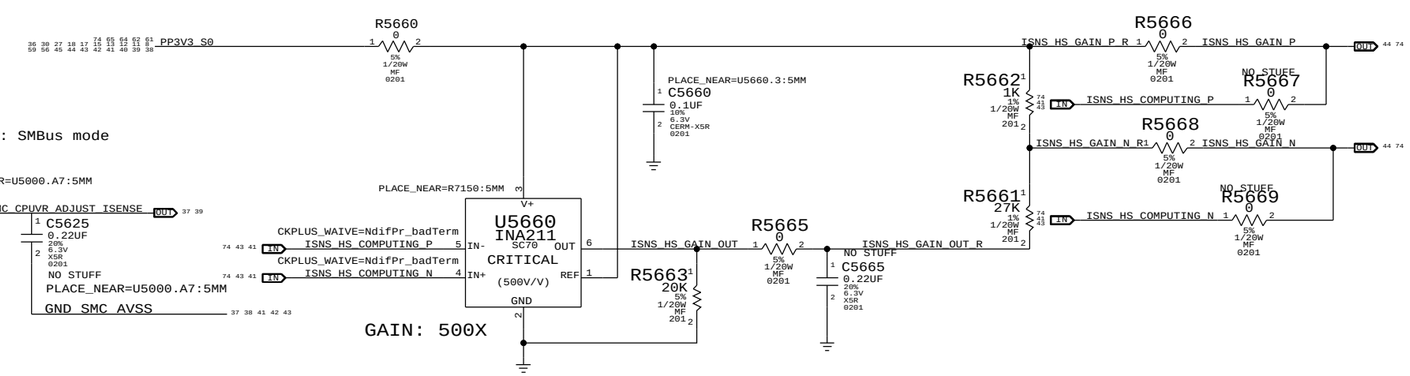

GAIN: 500X

In battery discharge scenario negative voltage will be present on IN+/- pins with INA output voltage decreasing from 3.3V with increasing discharge current.

With 100mA battery current, Will have 10.2mV difference going into sense pins of U5800.
This will set the minumum current threshold at 0.100mA

ILDC :LCD Panel Current Sense / Filter

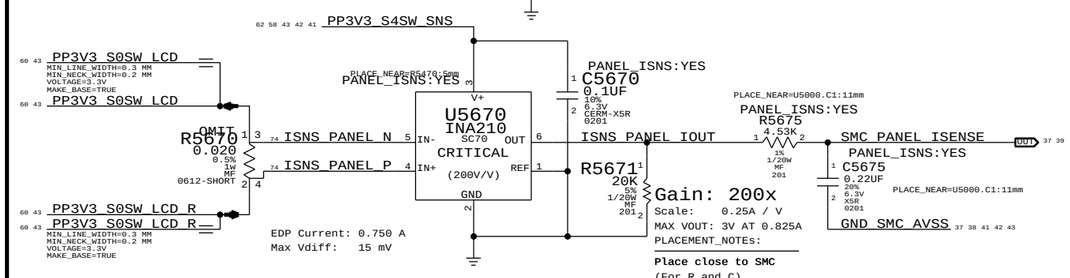

VR IMON Current Sense Filter

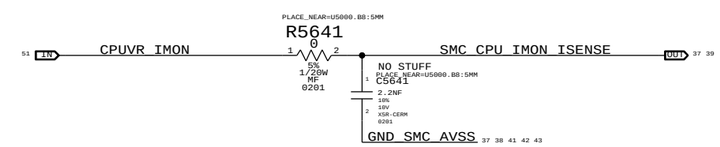

Discrete High side Current threshold

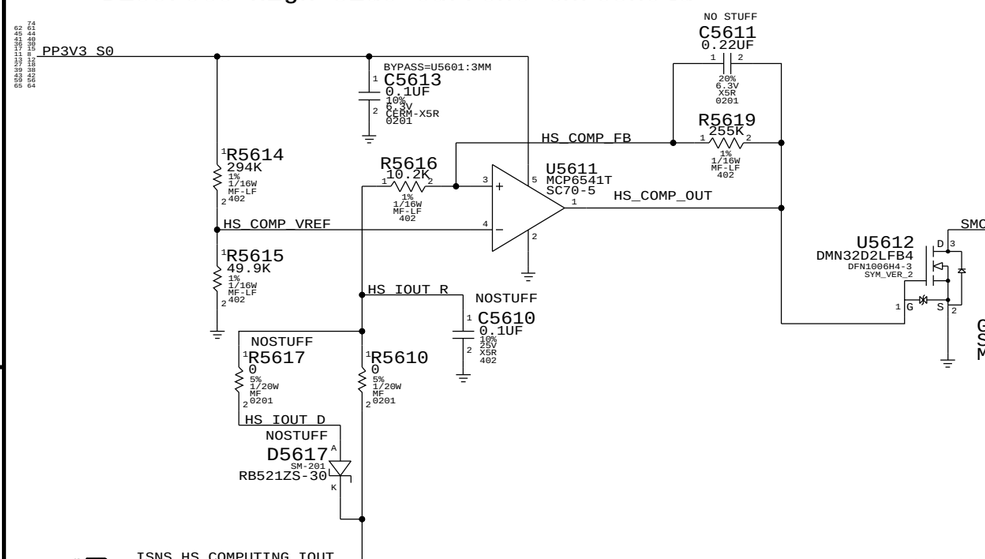

BMON : Discrete BMON Current Sense / Filter

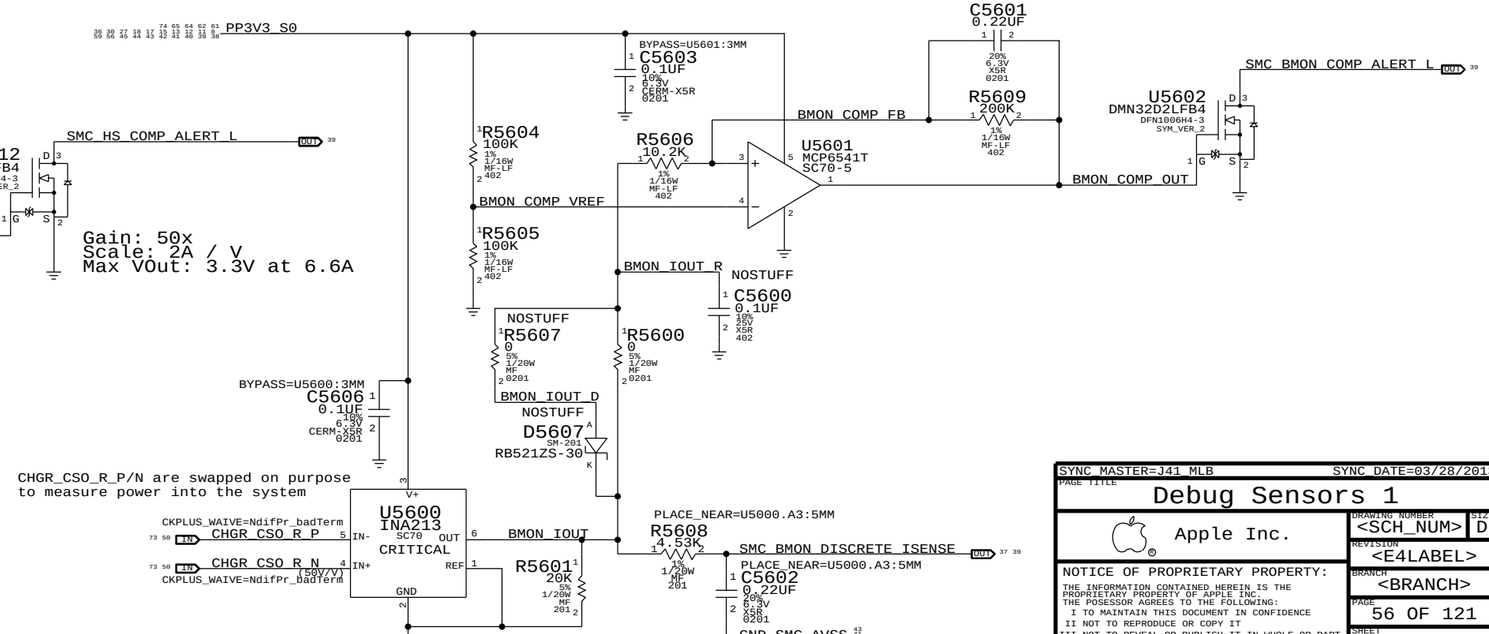

Vref = 0.406mV Vth = 0.442 = 1A from Battery
Vtl = 0.290mv = 0.687A from battery
Hysteresis TBD based on RC value changes

Replacing caps with 100K PD on ISENSE SMC inputs

PART NUMBER	QTY	DESCRIPTION	REFERENCE DES	CRITICAL	BOM OPTION
117S0008	1	RES,MF,1/20W,100K OHM,5,0201,SMD	C5675		PANEL_ISNS:NO

SYNC_MASTER=J41_MLB SYNC_DATE=03/28/2013

PAGE TITLE: Debug Sensors 1

Apple Inc.

DRAWING NUMBER: <SCH_NUM> SIZE: D
REVISION: <E4LABEL>
BRANCH: <BRANCH>
PAGE: 56 OF 121
SHEET: 43 OF 76

NOTICE OF PROPRIETARY PROPERTY:
THE INFORMATION CONTAINED HEREIN IS THE PROPRIETARY PROPERTY OF APPLE INC.
THE POSESSOR AGREES TO THE FOLLOWING:
I TO MAINTAIN THIS DOCUMENT IN CONFIDENCE
II NOT TO REPRODUCE OR COPY IT
III NOT TO REVEAL OR PUBLISH IT IN WHOLE OR PART
IV ALL RIGHTS RESERVED

WWW.AliSaler.Com

CPU Proximity, Inlet ,DDR and BMON THR Sensor

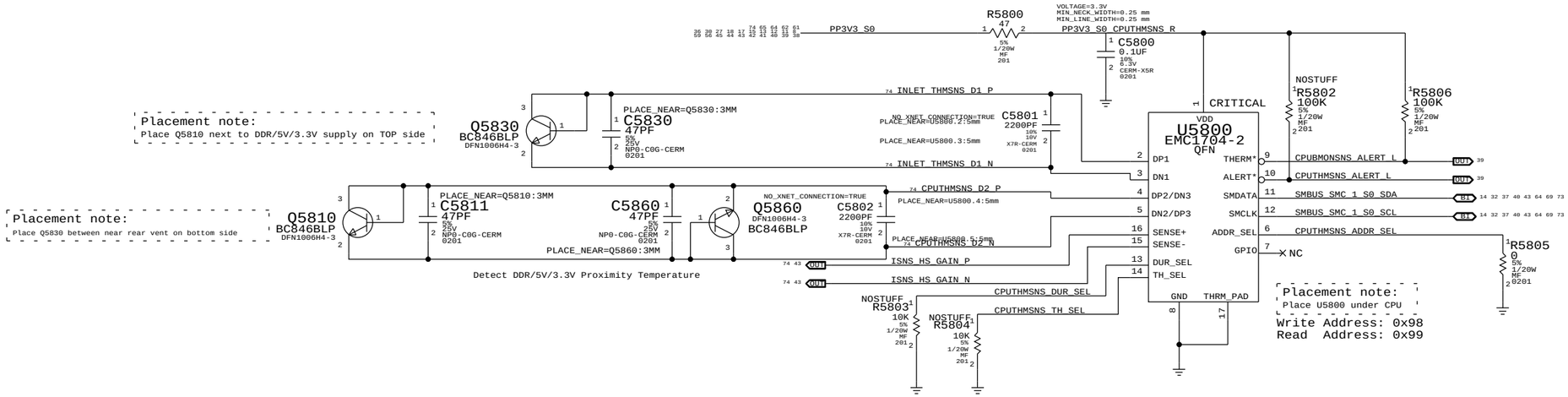

TBT,MLB Bottom Proximity Sensors

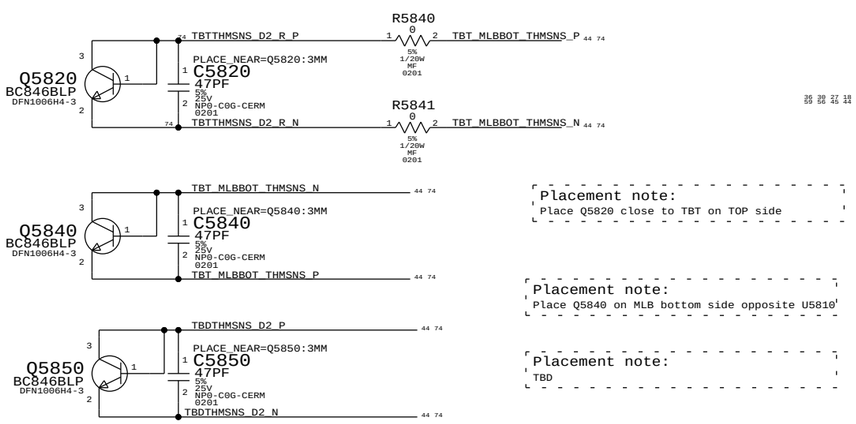

TBT, MLBBOT and TBD Temp Sensor

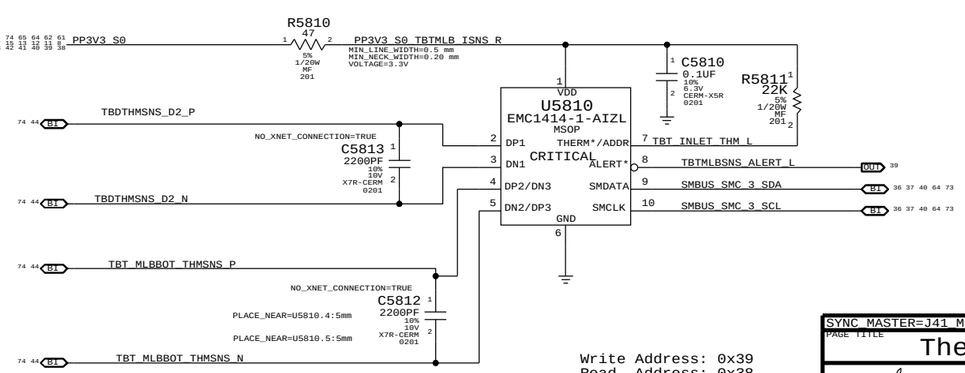

SYNC_MASTER=J41_MLB SYNC_DATE=02/06/2013

PAGE TITLE

Thermal Sensors

Apple Inc.

DRAWING NUMBER <SCH_NUM> SIZE D

REVISION <E4LABEL>

BRANCH <BRANCH>

PAGE 58 OF 121

SHEET 44 OF 76

NOTICE OF PROPRIETARY PROPERTY:
THE INFORMATION CONTAINED HEREIN IS THE PROPRIETARY PROPERTY OF APPLE INC.
THE POSESSOR AGREES TO THE FOLLOWING:
I TO MAINTAIN THIS DOCUMENT IN CONFIDENCE
II NOT TO REPRODUCE OR COPY IT
III NOT TO REVEAL OR PUBLISH IT IN WHOLE OR PART
IV ALL RIGHTS RESERVED

WWW.AliSaler.Com

FAN CONNECTOR

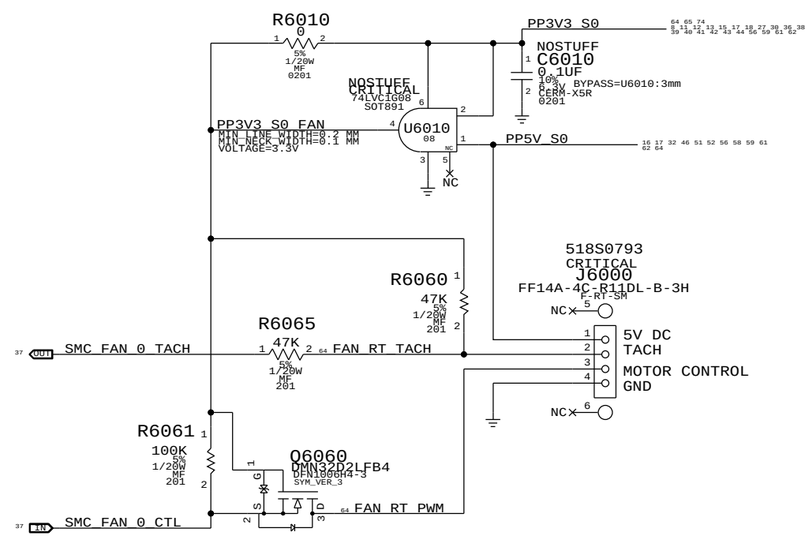

SYNC_MASTER=J41_MLB SYNC_DATE=02/06/2013

PAGE TITLE
Fan

Apple Inc.

DRAWING NUMBER <SCH_NUM> SIZE D

REVISION <E4LABEL>

BRANCH <BRANCH>

PAGE 60 OF 121

SHEET 45 OF 76

NOTICE OF PROPRIETARY PROPERTY:
THE INFORMATION CONTAINED HEREIN IS THE PROPRIETARY PROPERTY OF APPLE INC.
THE POSESSOR AGREES TO THE FOLLOWING:
I TO MAINTAIN THIS DOCUMENT IN CONFIDENCE
II NOT TO REPRODUCE OR COPY IT
III NOT TO REVEAL OR PUBLISH IT IN WHOLE OR PART
IV ALL RIGHTS RESERVED

WWW.AliSaler.Com

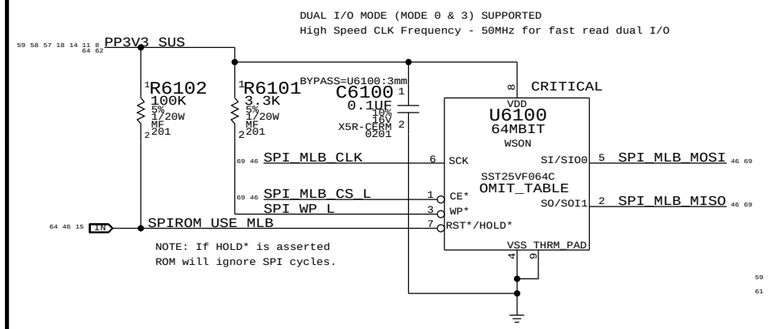

LPC+SPI Connector

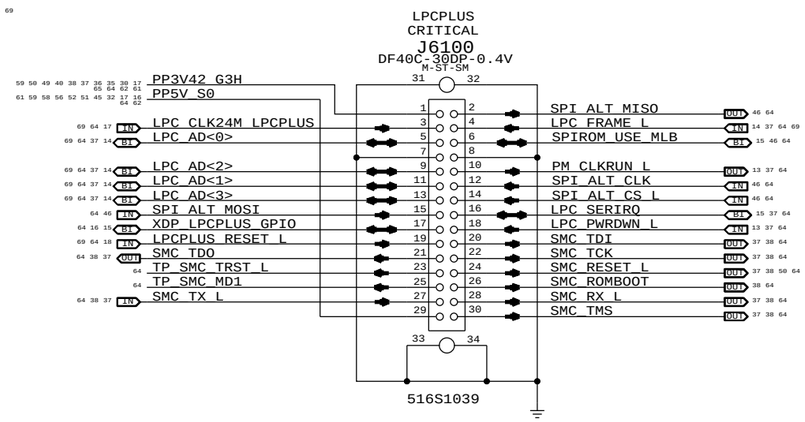

SPI Bus Series Termination

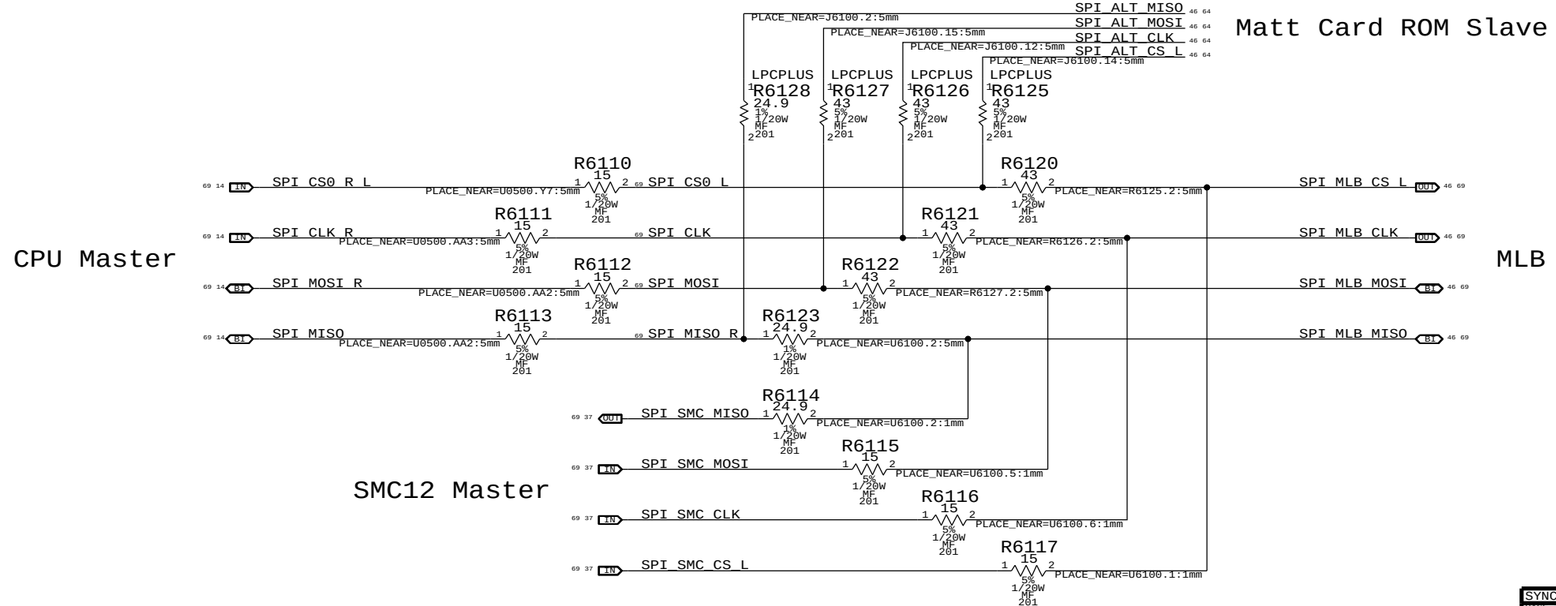

SYNC_MASTER=J41_MLB SYNC_DATE=04/02/2013

PAGE TITLE
LPC+SPI Debug Connector

Apple Inc.

DRAWING NUMBER <SCH_NUM> SIZE D

REVISION <E4LABEL>

BRANCH <BRANCH>

PAGE 61 OF 121

SHEET 46 OF 76

NOTICE OF PROPRIETARY PROPERTY:
THE INFORMATION CONTAINED HEREIN IS THE PROPRIETARY PROPERTY OF APPLE INC.
THE POSESSOR AGREES TO THE FOLLOWING:
I TO MAINTAIN THIS DOCUMENT IN CONFIDENCE
II NOT TO REPRODUCE OR COPY IT
III NOT TO REVEAL OR PUBLISH IT IN WHOLE OR PART
IV ALL RIGHTS RESERVED

WWW.AliSaler.Com

SPEAKER AMPLIFIERS

APN:353S2888

SPEAKER LOWPASS	80 HZ < FC < 132 HZ
GAIN	6DB

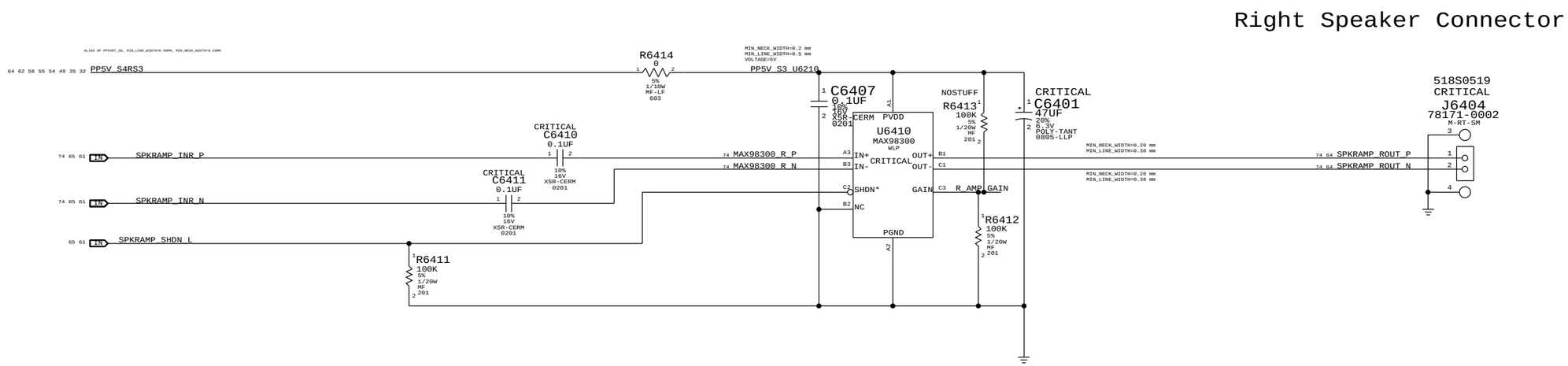

SYNC_MASTER=J41_MLB SYNC_DATE=02/06/2013

PAGE TITLE
Audio: Speaker Amp

Apple Inc.

DRAWING NUMBER <SCH_NUM> SIZE D

REVISION <E4LABEL>

BRANCH <BRANCH>

PAGE 64 OF 121

SHEET 47 OF 76

NOTICE OF PROPRIETARY PROPERTY:
THE INFORMATION CONTAINED HEREIN IS THE PROPRIETARY PROPERTY OF APPLE INC.
THE POSESSOR AGREES TO THE FOLLOWING:
I TO MAINTAIN THIS DOCUMENT IN CONFIDENCE
II NOT TO REPRODUCE OR COPY IT
III NOT TO REVEAL OR PUBLISH IT IN WHOLE OR PART
IV ALL RIGHTS RESERVED

WWW.AliSaler.Com

13" SPECIFIC
Battery Connector

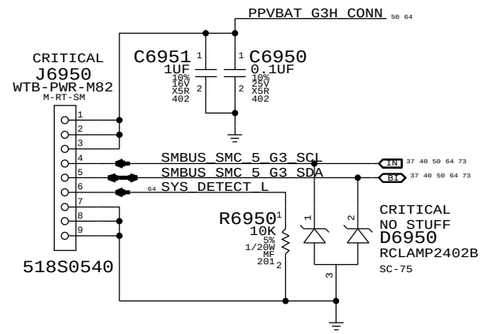

SYNC_MASTER=MASTER SYNC_DATE=MASTER

PAGE TITLE
Battery Connector

Apple Inc.

DRAWING NUMBER <SCH_NUM> SIZE D

REVISION <E4LABEL>

BRANCH <BRANCH>

PAGE 69 OF 121

SHEET 48 OF 76

NOTICE OF PROPRIETARY PROPERTY:
THE INFORMATION CONTAINED HEREIN IS THE PROPRIETARY PROPERTY OF APPLE INC.
THE POSESSOR AGREES TO THE FOLLOWING:
I TO MAINTAIN THIS DOCUMENT IN CONFIDENCE
II NOT TO REPRODUCE OR COPY IT
III NOT TO REVEAL OR PUBLISH IT IN WHOLE OR PART
IV ALL RIGHTS RESERVED

WWW.AliSaler.Com

MLB to LIO Power Cable Connector

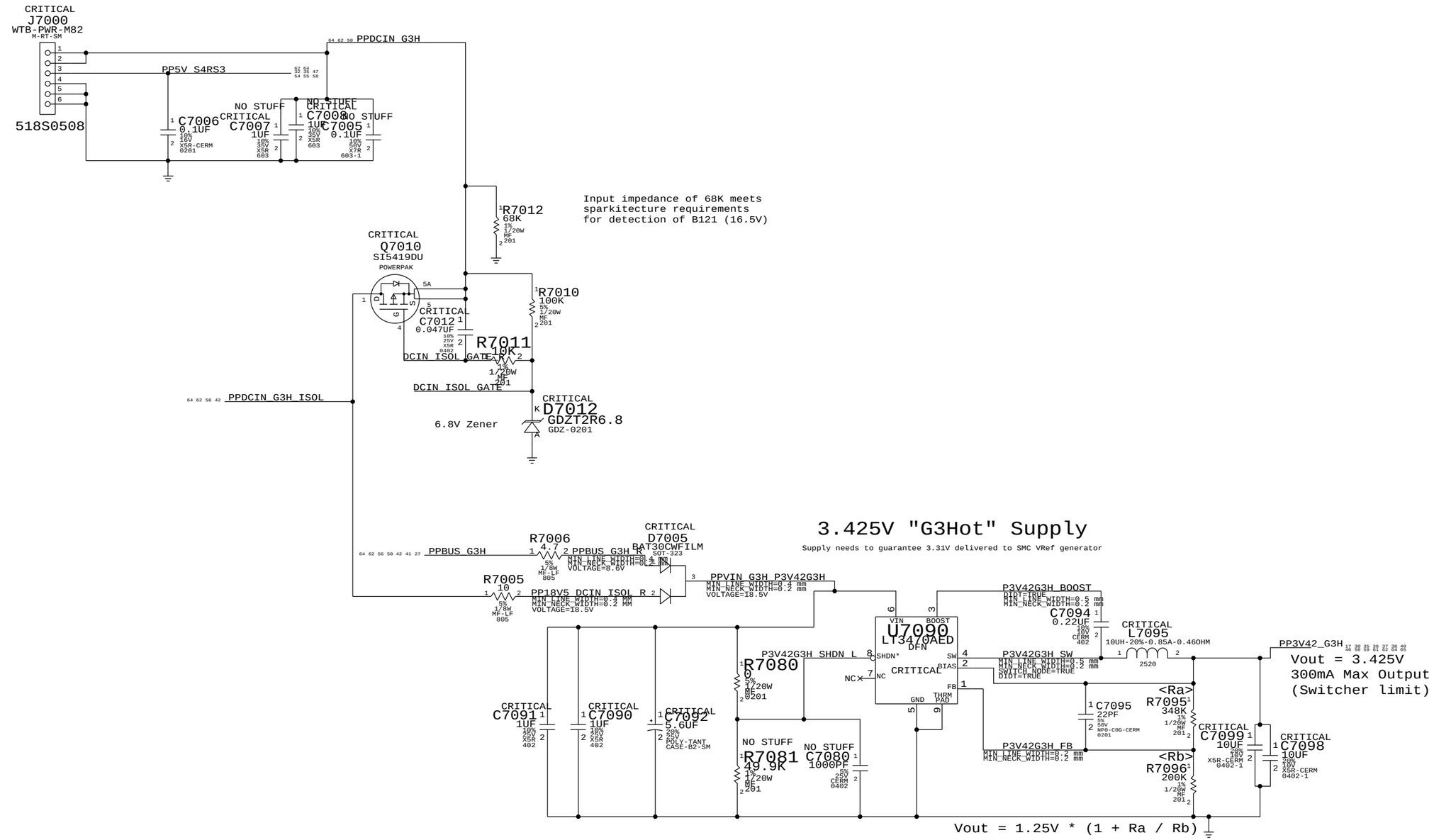

SYNC_MASTER=J41_MLB SYNC_DATE=02/06/2013

PAGE TITLE

DC-In & G3H Supply

Apple Inc.

DRAWING NUMBER <SCH_NUM> SIZE D

REVISION <E4LABEL>

BRANCH <BRANCH>

PAGE 70 OF 121

SHEET 49 OF 76

NOTICE OF PROPRIETARY PROPERTY:
THE INFORMATION CONTAINED HEREIN IS THE PROPRIETARY PROPERTY OF APPLE INC.
THE POSESSOR AGREES TO THE FOLLOWING:
I TO MAINTAIN THIS DOCUMENT IN CONFIDENCE
II NOT TO REPRODUCE OR COPY IT
III NOT TO REVEAL OR PUBLISH IT IN WHOLE OR PART
IV ALL RIGHTS RESERVED

WWW.AliSaler.Com

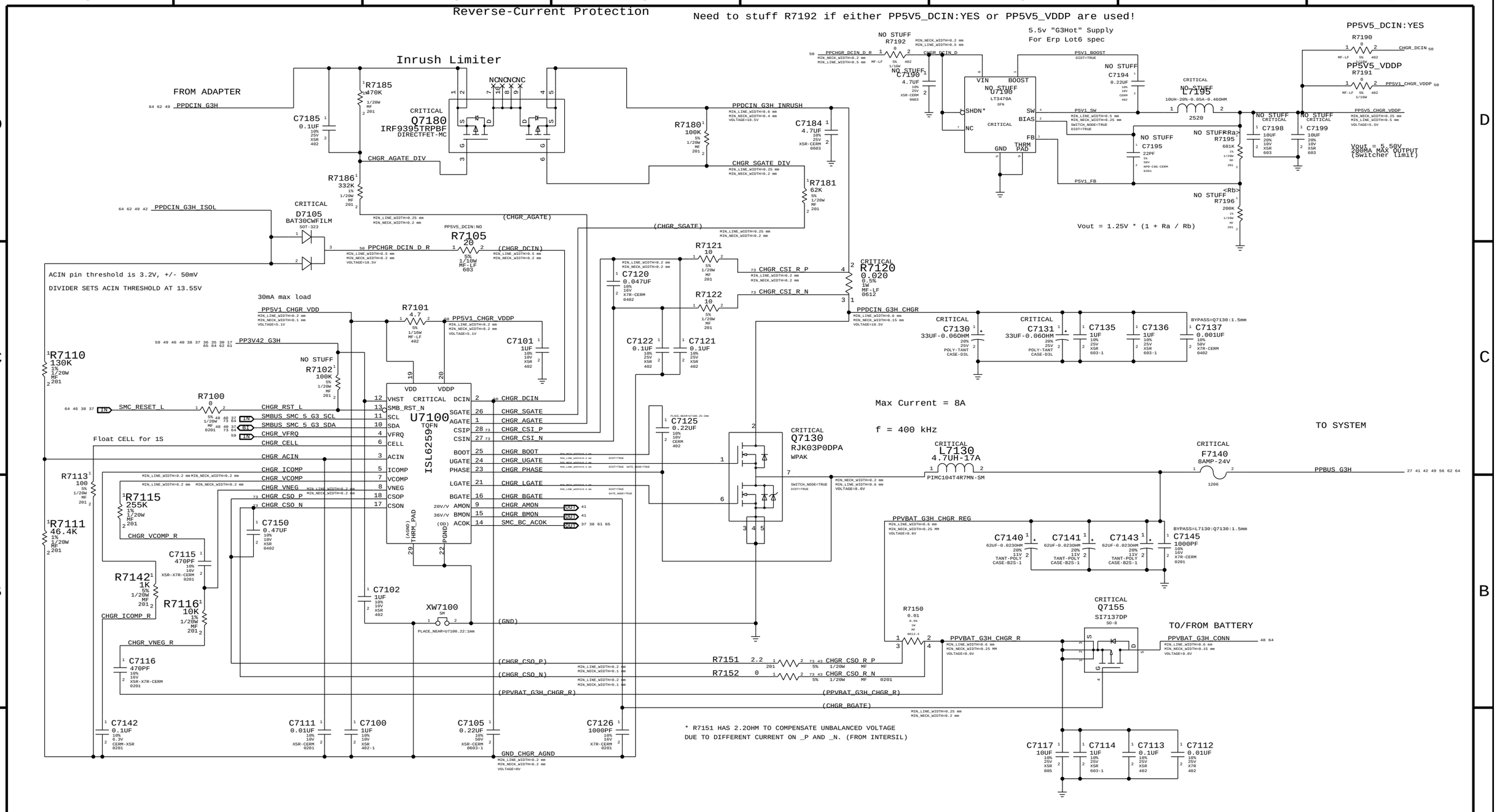

SYNC_MASTER=J41_MLB SYNC_DATE=02/09/2013

PAGE TITLE
PBus Supply & Battery Charger

Apple Inc.

DRAWING NUMBER <SCH_NUM> SIZE D
REVISION <E4LABEL>
BRANCH <BRANCH>
PAGE 71 OF 121
SHEET 50 OF 76

NOTICE OF PROPRIETARY PROPERTY:
THE INFORMATION CONTAINED HEREIN IS THE PROPRIETARY PROPERTY OF APPLE INC.
THE POSESSOR AGREES TO THE FOLLOWING:
I TO MAINTAIN THIS DOCUMENT IN CONFIDENCE
II NOT TO REPRODUCE OR COPY IT
III NOT TO REVEAL OR PUBLISH IT IN WHOLE OR PART
IV ALL RIGHTS RESERVED

WWW.AliSaler.Com

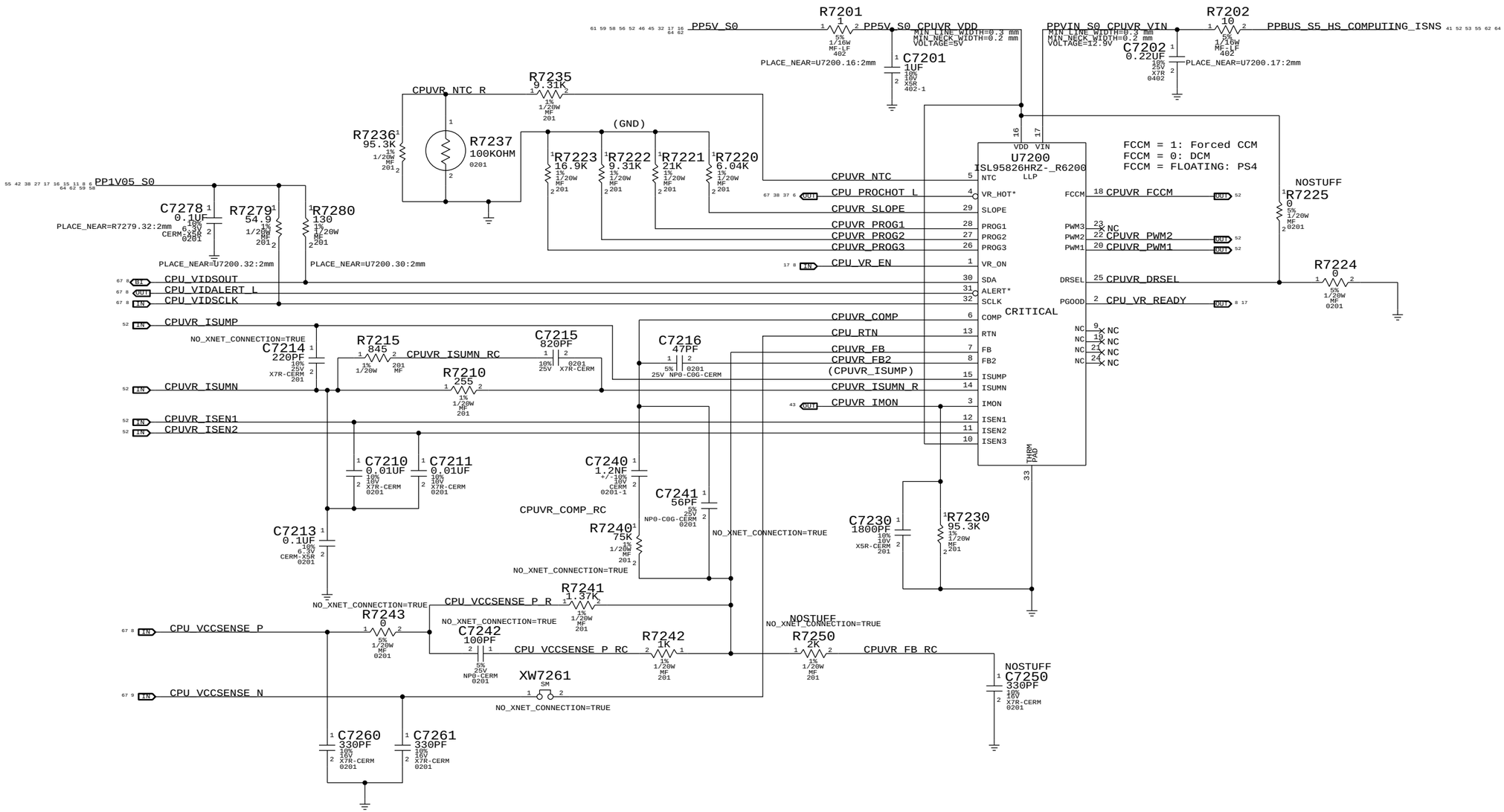

SYNC_MASTER=J41_MLB SYNC_DATE=04/09/2013

PAGE TITLE
CPU VR12.6 VCC Regulator IC

Apple Inc.

DRAWING NUMBER <SCH_NUM> SIZE D

REVISION <E4LABEL>

BRANCH <BRANCH>

PAGE 72 OF 121

SHEET 51 OF 76

NOTICE OF PROPRIETARY PROPERTY:
THE INFORMATION CONTAINED HEREIN IS THE PROPRIETARY PROPERTY OF APPLE INC.
THE POSESSOR AGREES TO THE FOLLOWING:
I TO MAINTAIN THIS DOCUMENT IN CONFIDENCE
II NOT TO REPRODUCE OR COPY IT
III NOT TO REVEAL OR PUBLISH IT IN WHOLE OR PART
IV ALL RIGHTS RESERVED

WWW.AliSaler.Com

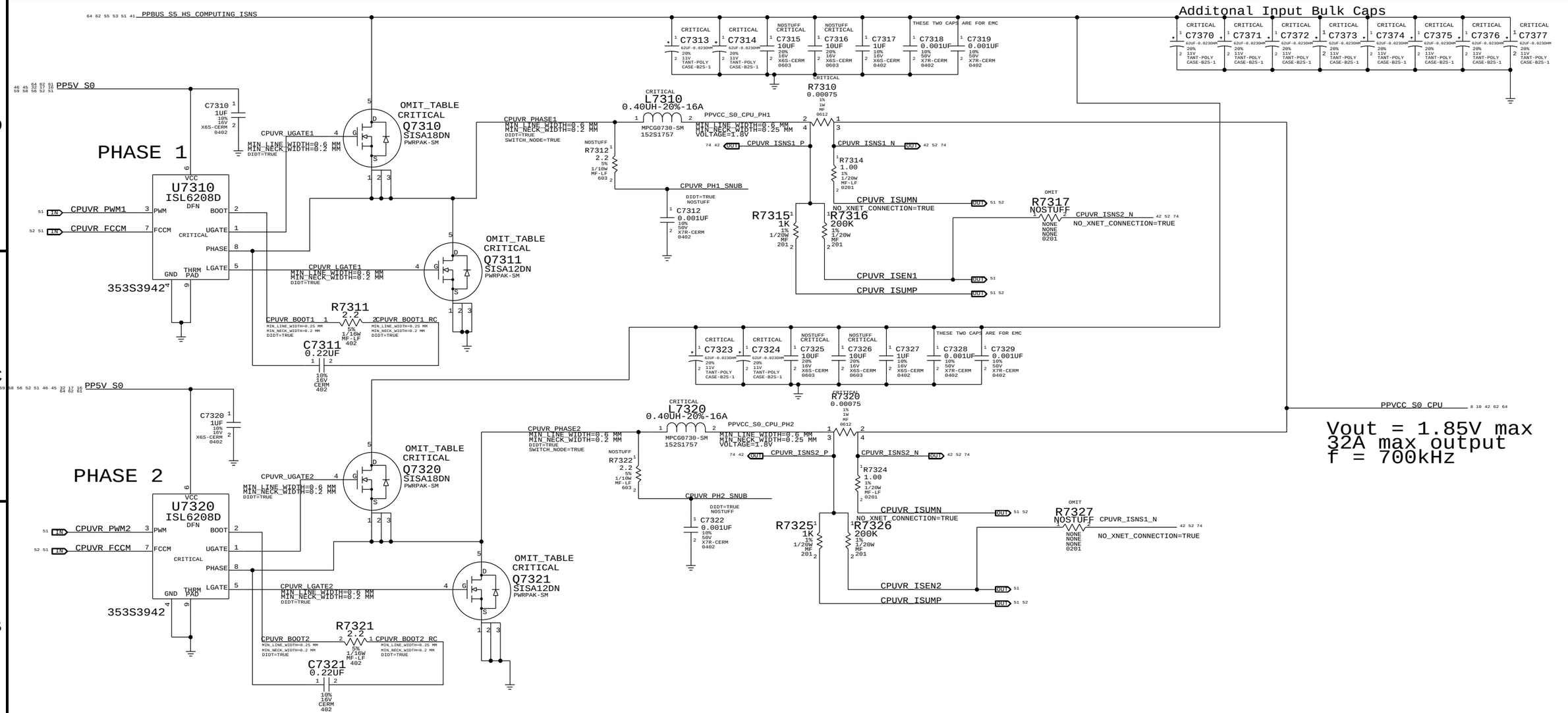

SYNC_MASTER=J41_MLB SYNC_DATE=04/09/2013

PAGE TITLE
CPU VR12.5 VCC Power Stage

Apple Inc.

DRAWING NUMBER <SCH_NUM> SIZE D
REVISION <E4LABEL>
BRANCH <BRANCH>
PAGE 73 OF 121
SHEET 52 OF 76

NOTICE OF PROPRIETARY PROPERTY:
THE INFORMATION CONTAINED HEREIN IS THE PROPRIETARY PROPERTY OF APPLE INC.
THE POSESSOR AGREES TO THE FOLLOWING:
I TO MAINTAIN THIS DOCUMENT IN CONFIDENCE
II NOT TO REPRODUCE OR COPY IT
III NOT TO REVEAL OR PUBLISH IT IN WHOLE OR PART
IV ALL RIGHTS RESERVED

WWW.AliSaler.Com

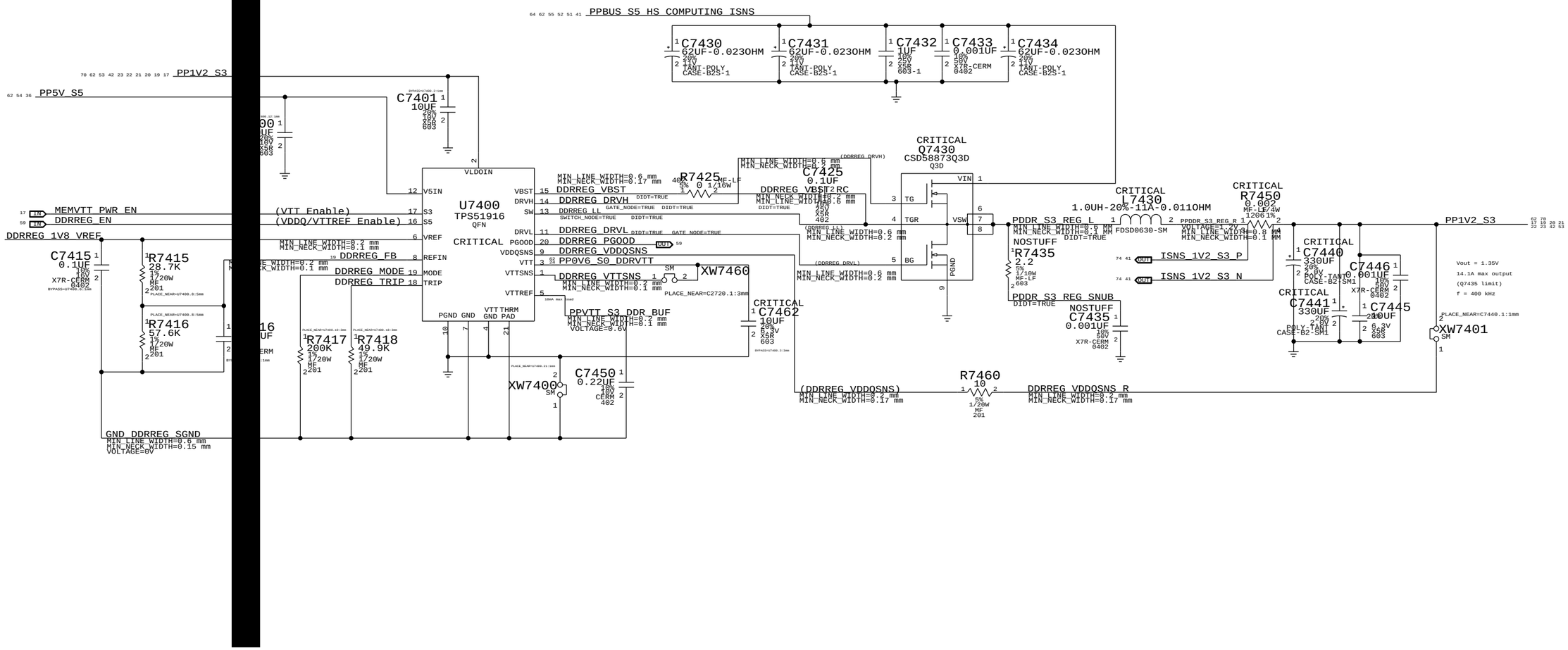

SYNC_MASTER=J41_MLB SYNC_DATE=02/09/2013

PAGE TITLE

LPDDR3 Supply

Apple Inc.

DRAWING NUMBER <SCH_NUM> SIZE D

REVISION <E4LABEL>

BRANCH <BRANCH>

PAGE 74 OF 121

SHEET 53 OF 76

NOTICE OF PROPRIETARY PROPERTY:
THE INFORMATION CONTAINED HEREIN IS THE PROPRIETARY PROPERTY OF APPLE INC.
THE POSESSOR AGREES TO THE FOLLOWING:
I TO MAINTAIN THIS DOCUMENT IN CONFIDENCE
II NOT TO REPRODUCE OR COPY IT
III NOT TO REVEAL OR PUBLISH IT IN WHOLE OR PART
IV ALL RIGHTS RESERVED

WWW.AliSaler.Com

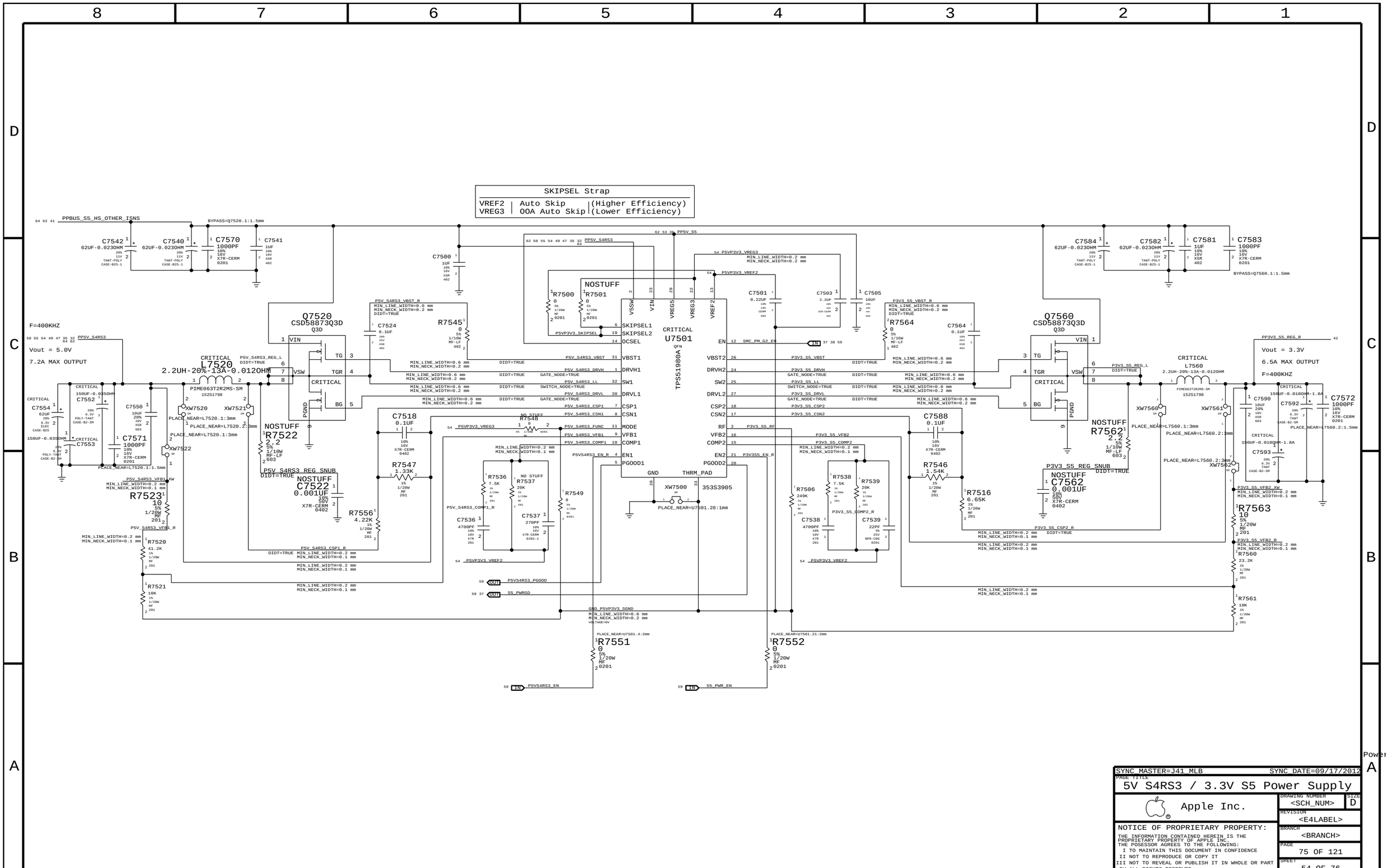

SYNC_MASTER=J41_MLB SYNC_DATE=09/17/2012

PAGE TITLE
5V S4RS3 / 3.3V S5 Power Supply

Apple Inc.

DRAWING NUMBER <SCH_NUM> SIZE D

REVISION <E4LABEL>

BRANCH <BRANCH>

PAGE 75 OF 121

SHEET 54 OF 76

NOTICE OF PROPRIETARY PROPERTY:
THE INFORMATION CONTAINED HEREIN IS THE PROPRIETARY PROPERTY OF APPLE INC.
THE POSESSOR AGREES TO THE FOLLOWING:
I TO MAINTAIN THIS DOCUMENT IN CONFIDENCE
II NOT TO REPRODUCE OR COPY IT
III NOT TO REVEAL OR PUBLISH IT IN WHOLE OR PART
IV ALL RIGHTS RESERVED

WWW.AliSaler.Com

1.05V S0 Regulator

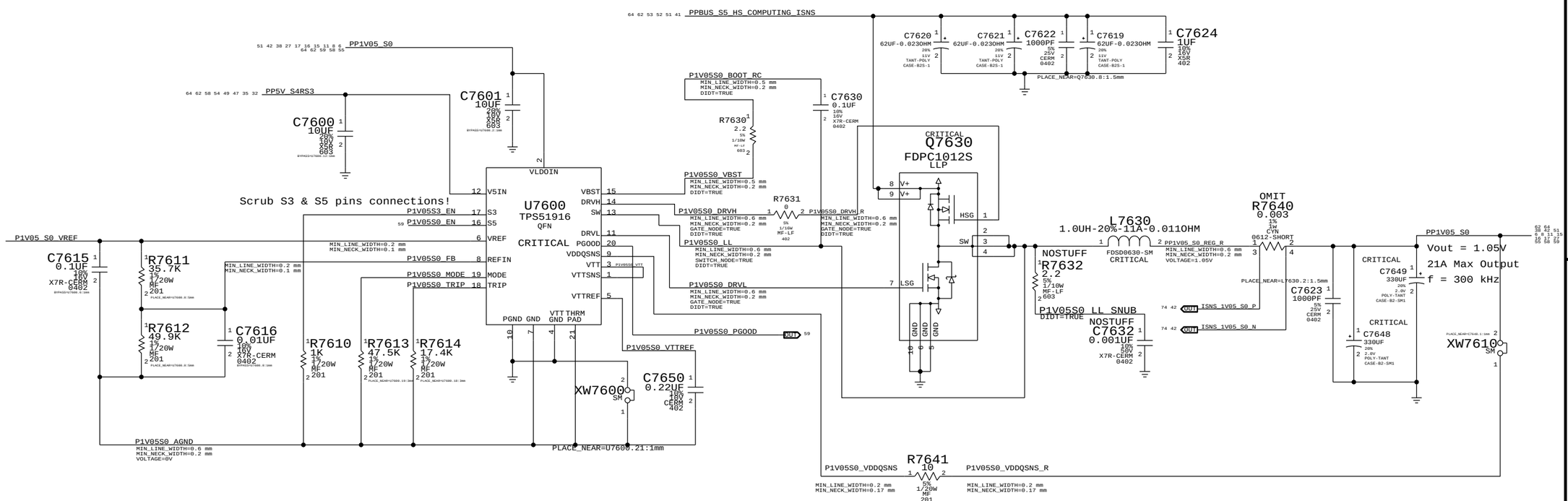

SYNC MASTER=J41_MLB SYNC DATE=03/28/2013

PAGE TITLE
1.05V S0 Power Supply

Apple Inc.

DRAWING NUMBER <SCH_NUM> SIZE D

REVISION <E4LABEL>

BRANCH <BRANCH>

PAGE 76 OF 121

SHEET 55 OF 76

NOTICE OF PROPRIETARY PROPERTY:
THE INFORMATION CONTAINED HEREIN IS THE PROPRIETARY PROPERTY OF APPLE INC.
THE POSESSOR AGREES TO THE FOLLOWING:
I TO MAINTAIN THIS DOCUMENT IN CONFIDENCE
II NOT TO REPRODUCE OR COPY IT
III NOT TO REVEAL OR PUBLISH IT IN WHOLE OR PART
IV ALL RIGHTS RESERVED

WWW.AliSaler.Com

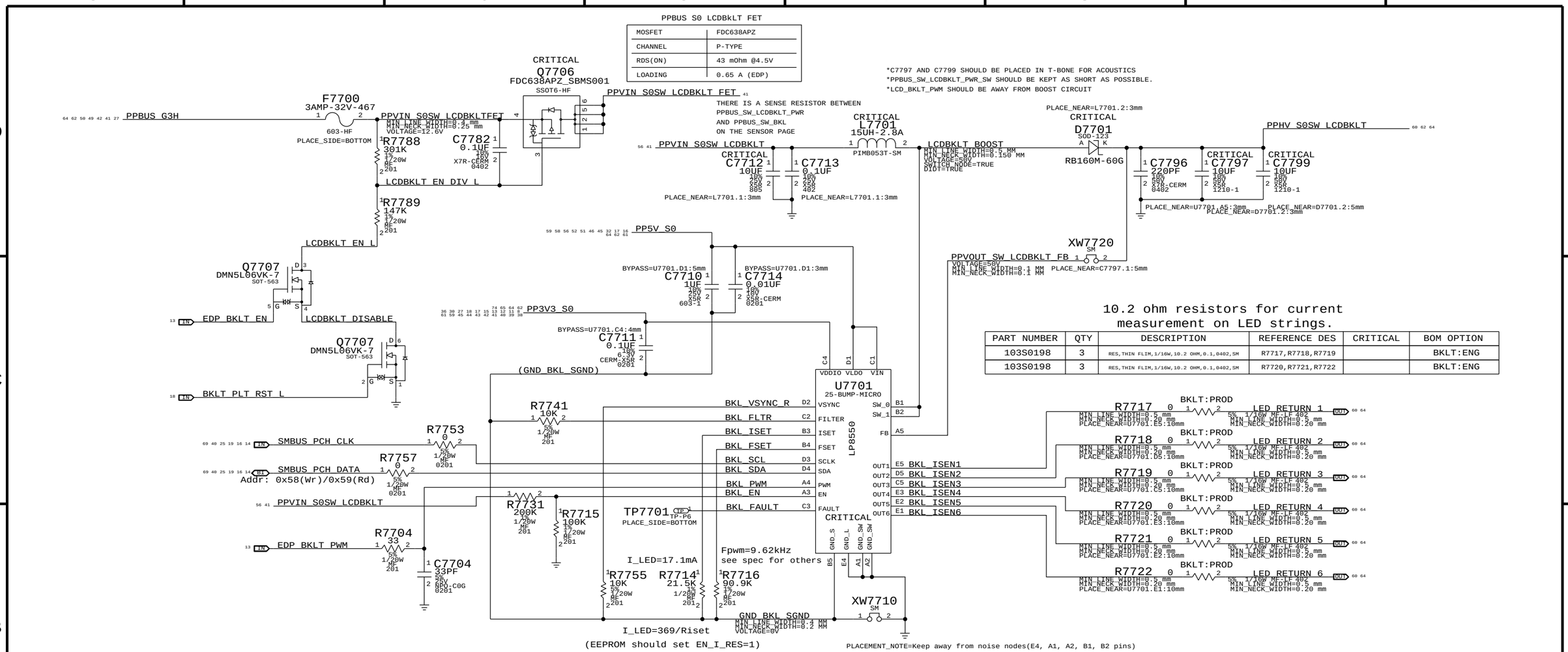

10.2 ohm resistors for current measurement on LED strings.

PART NUMBER	QTY	DESCRIPTION	REFERENCE DES	CRITICAL	BOM OPTION
103S0198	3	RES,THIN FLIM,1/16W,10.2 OHM,0.1,0402,SM	R7717,R7718,R7719		BKLT:ENG
103S0198	3	RES,THIN FLIM,1/16W,10.2 OHM,0.1,0402,SM	R7720,R7721,R7722		BKLT:ENG

Keyboard Backlight Driver & Detection

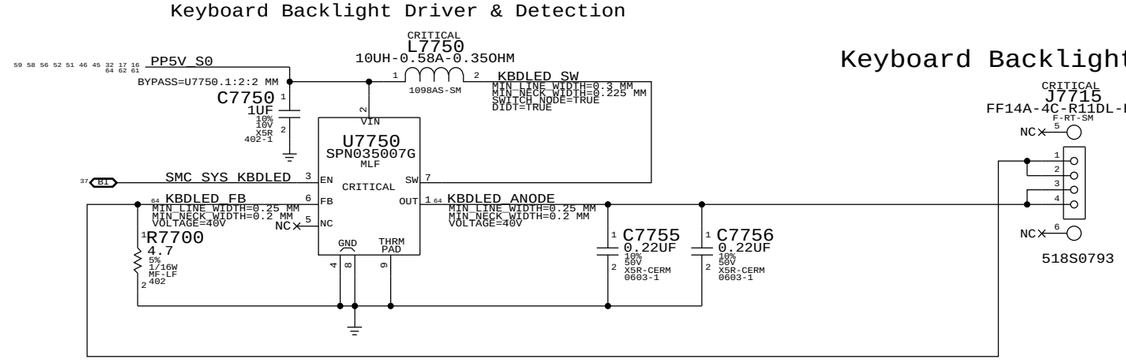

Keyboard Backlight Connector

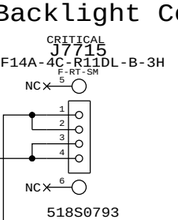

SYNC_MASTER=J41_MLB SYNC_DATE=02/06/2013

PAGE TITLE
LCD/KBD Backlight Driver

Apple Inc.

DRAWING NUMBER <SCH_NUM> SIZE D

REVISION <E4LABEL>

BRANCH <BRANCH>

PAGE 77 OF 121

SHEET 56 OF 76

NOTICE OF PROPRIETARY PROPERTY:
THE INFORMATION CONTAINED HEREIN IS THE PROPRIETARY PROPERTY OF APPLE INC.
THE POSESSOR AGREES TO THE FOLLOWING:
I TO MAINTAIN THIS DOCUMENT IN CONFIDENCE
II NOT TO REPRODUCE OR COPY IT
III NOT TO REVEAL OR PUBLISH IT IN WHOLE OR PART
IV ALL RIGHTS RESERVED

WWW.AliSaler.Com

1.05V SUS LDO

Cougar Point requires JTAG pull-ups to be powered at 1.05V when SUS suspend well is active.
Pull-ups (3) must be 51 ohms to support XDP (not required in production).
70mA is required to support pull-ups. Alternative is strong voltage
dividers (200/100) to 3.3V S5, which burns 100mW in all S-states.

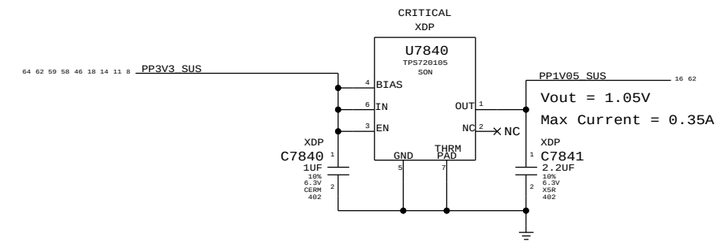

1.8V S3 REGULATOR

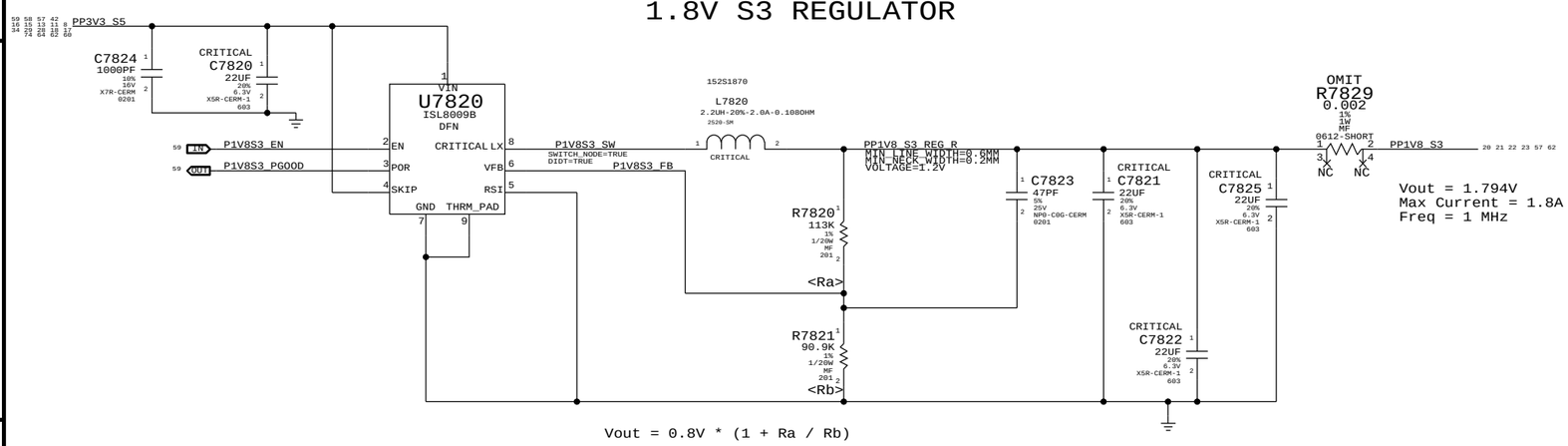

1.5V S0 LDO

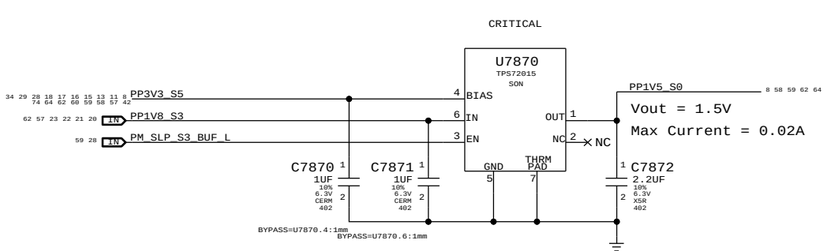

SYNC_MASTER=J41_MLB	SYNC_DATE=02/06/2013
PAGE TITLE: Misc Power Supplies	
Apple Inc.	DRAWING NUMBER: <SCH_NUM> SIZE: D
	REVISION: <E4LABEL>
	BRANCH: <BRANCH>
	PAGE: 78 OF 121
	SHEET: 57 OF 76

NOTICE OF PROPRIETARY PROPERTY:
THE INFORMATION CONTAINED HEREIN IS THE PROPRIETARY PROPERTY OF APPLE INC.
THE POSESSOR AGREES TO THE FOLLOWING:
I TO MAINTAIN THIS DOCUMENT IN CONFIDENCE
II NOT TO REPRODUCE OR COPY IT
III NOT TO REVEAL OR PUBLISH IT IN WHOLE OR PART
IV ALL RIGHTS RESERVED

WWW.AliSaler.Com

Loading specs per J41/43_PowerBudget_Riviera_rev0.99e

1.5V S0 Audio Switch

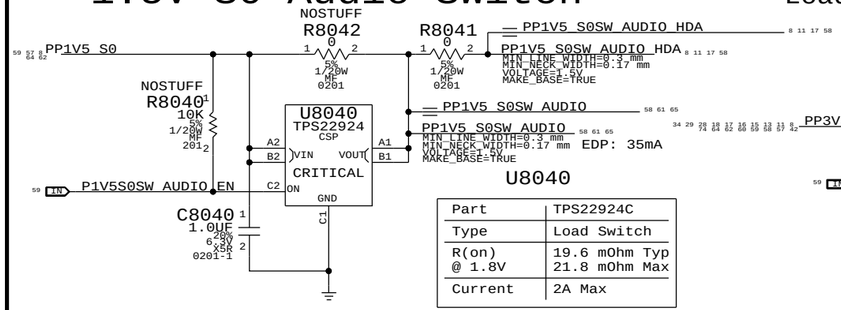

U8040

Part	TPS22924C
Type	Load Switch
R(on) @ 1.8V	19.6 mOhm Typ 21.8 mOhm Max
Current	2A Max

3.3V SUS Switch

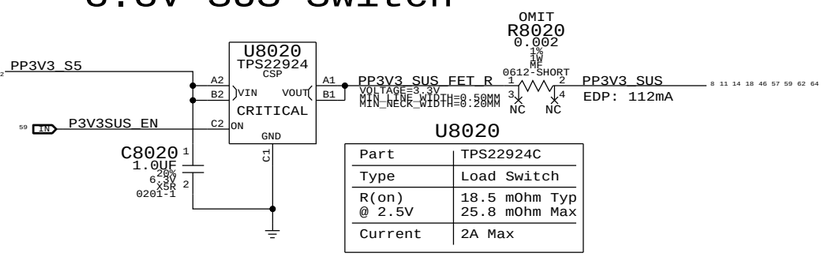

U8020

Part	TPS22924C
Type	Load Switch
R(on) @ 2.5V	18.5 mOhm Typ 25.8 mOhm Max
Current	2A Max

3.3V S4 Switch

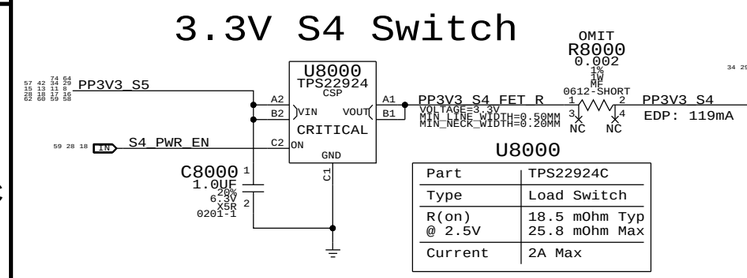

U8000

Part	TPS22924C
Type	Load Switch
R(on) @ 2.5V	18.5 mOhm Typ 25.8 mOhm Max
Current	2A Max

3.3V SSD Switch

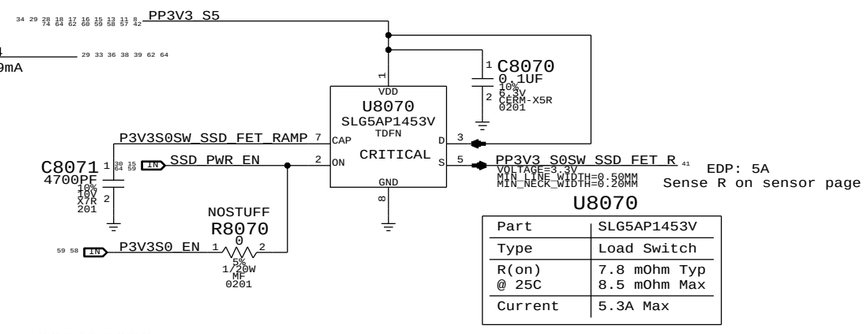

U8070

Part	SLG5AP1453V
Type	Load Switch
R(on) @ 25C	7.8 mOhm Typ 8.5 mOhm Max
Current	5.3A Max

1.05V PCH HSIO Switch

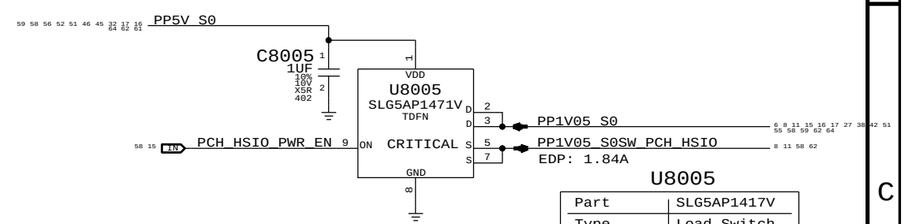

HSIO has turn-on requirement of <0.1V/uS ramp rate and <65uS from EN to 95% (1.05V)

U8005

Part	SLG5AP1417V
Type	Load Switch
R(on) @ 4V Vgs	9.8 mOhm Typ TBD mOhm Max
Current	6A Max

3.3V S3 Switch

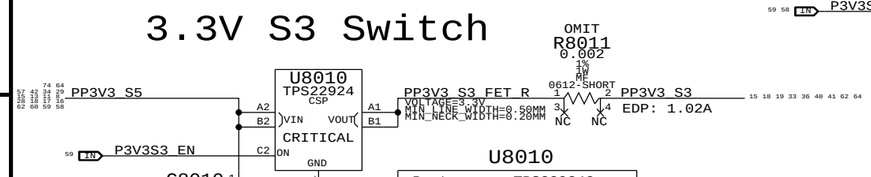

U8010

Part	TPS22924C
Type	Load Switch
R(on) @ 2.5V	18.5 mOhm Typ 25.8 mOhm Max
Current	2A Max

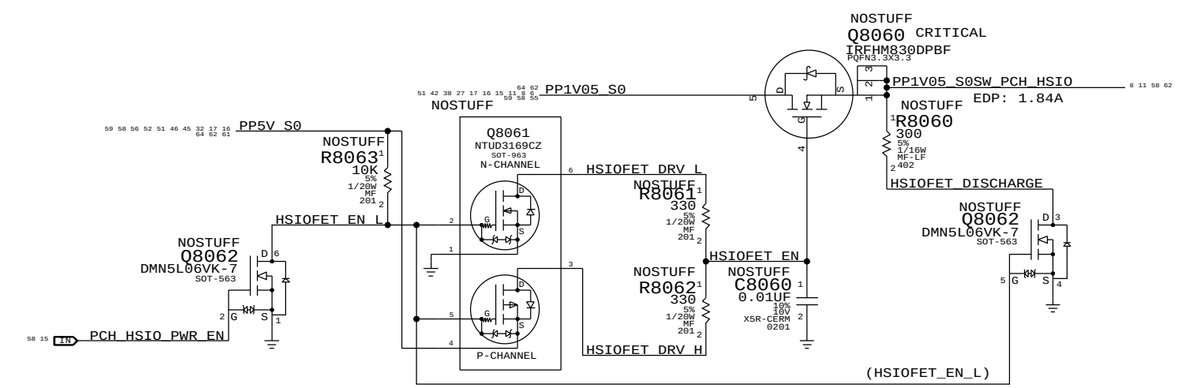

3.3V S0 Switch

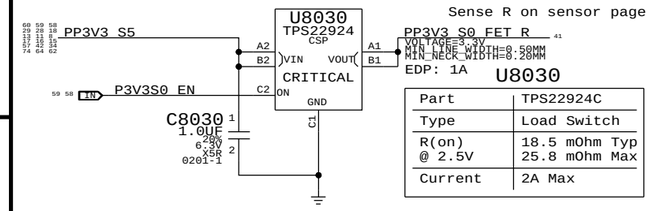

U8030

Part	TPS22924C
Type	Load Switch
R(on) @ 2.5V	18.5 mOhm Typ 25.8 mOhm Max
Current	2A Max

5V S0 Switch

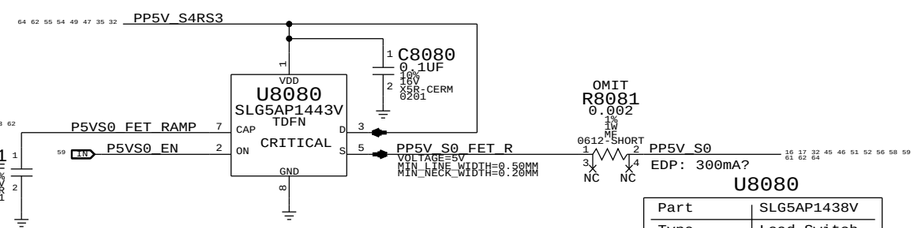

U8080

Part	SLG5AP1438V
Type	Load Switch
R(on)	15 mOhm Typ 17 mOhm Max
Current	2.5A

3.3V Sensor Switch

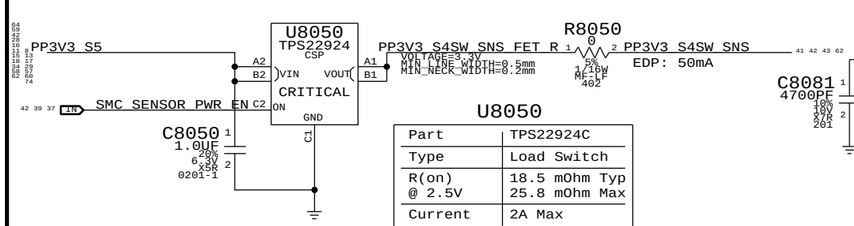

U8050

Part	TPS22924C
Type	Load Switch
R(on) @ 2.5V	18.5 mOhm Typ 25.8 mOhm Max
Current	2A Max

SYNC MASTER=J41_MLB	SYNC DATE=02/06/2013
PAGE TITLE	Power FETs
Apple Inc.	DRAWING NUMBER <SCH_NUM> SIZE D
	REVISION <E4LABEL>
NOTICE OF PROPRIETARY PROPERTY: THE INFORMATION CONTAINED HEREIN IS THE PROPRIETARY PROPERTY OF APPLE INC. THE POSESSOR AGREES TO THE FOLLOWING: I TO MAINTAIN THIS DOCUMENT IN CONFIDENCE II NOT TO REPRODUCE OR COPY IT III NOT TO REVEAL OR PUBLISH IT IN WHOLE OR PART IV ALL RIGHTS RESERVED	BRANCH <BRANCH>
	PAGE 80 OF 121
	SHEET 58 OF 76

WWW.AliSaler.Com

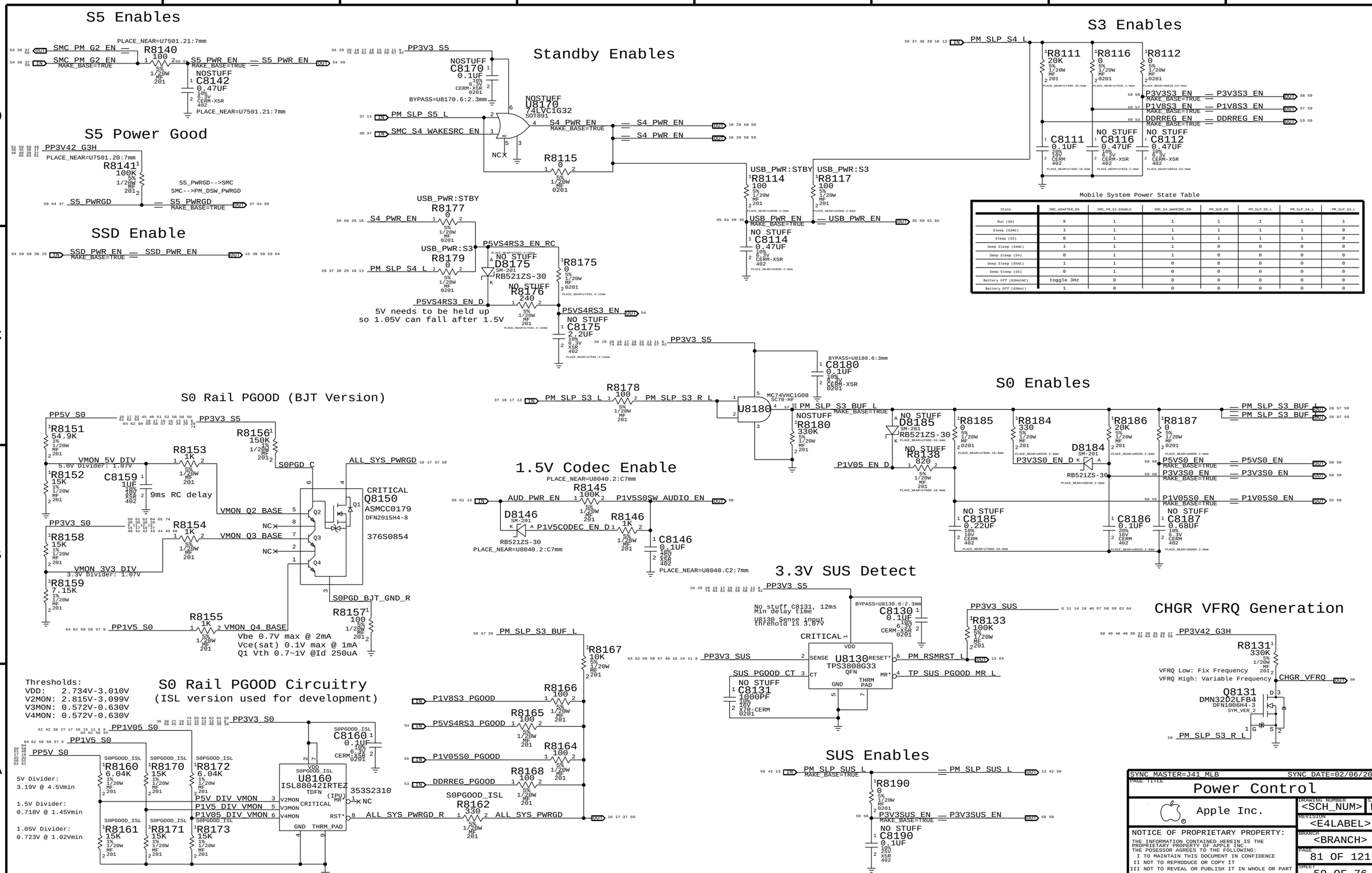

WWW.AliSaler.Com

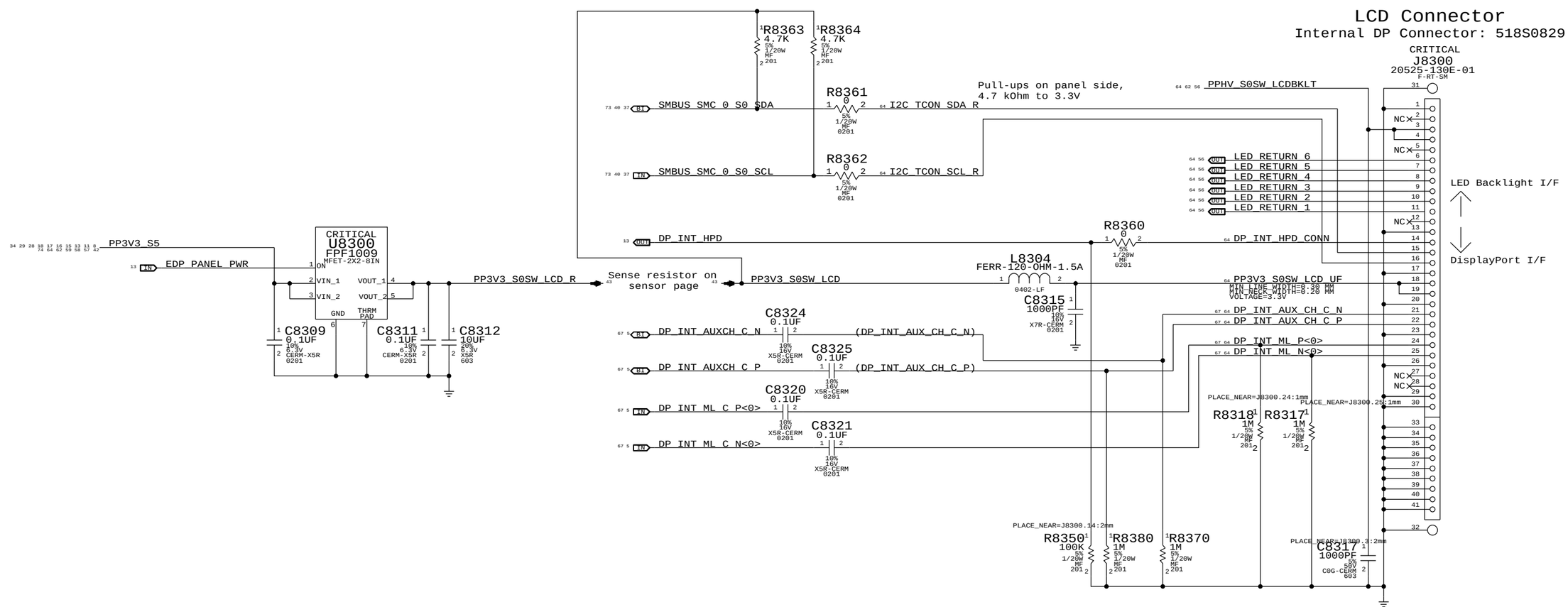

SYNC_MASTER=J41_MLB SYNC_DATE=02/06/2013

PAGE TITLE
Internal DisplayPort Connector

Apple Inc.

DRAWING NUMBER <SCH_NUM> SIZE D

REVISION <E4LABEL>

BRANCH <BRANCH>

PAGE 83 OF 121

SHEET 60 OF 76

NOTICE OF PROPRIETARY PROPERTY:
THE INFORMATION CONTAINED HEREIN IS THE PROPRIETARY PROPERTY OF APPLE INC.
THE POSESSOR AGREES TO THE FOLLOWING:
I TO MAINTAIN THIS DOCUMENT IN CONFIDENCE
II NOT TO REPRODUCE OR COPY IT
III NOT TO REVEAL OR PUBLISH IT IN WHOLE OR PART
IV ALL RIGHTS RESERVED

WWW.AliSaler.Com

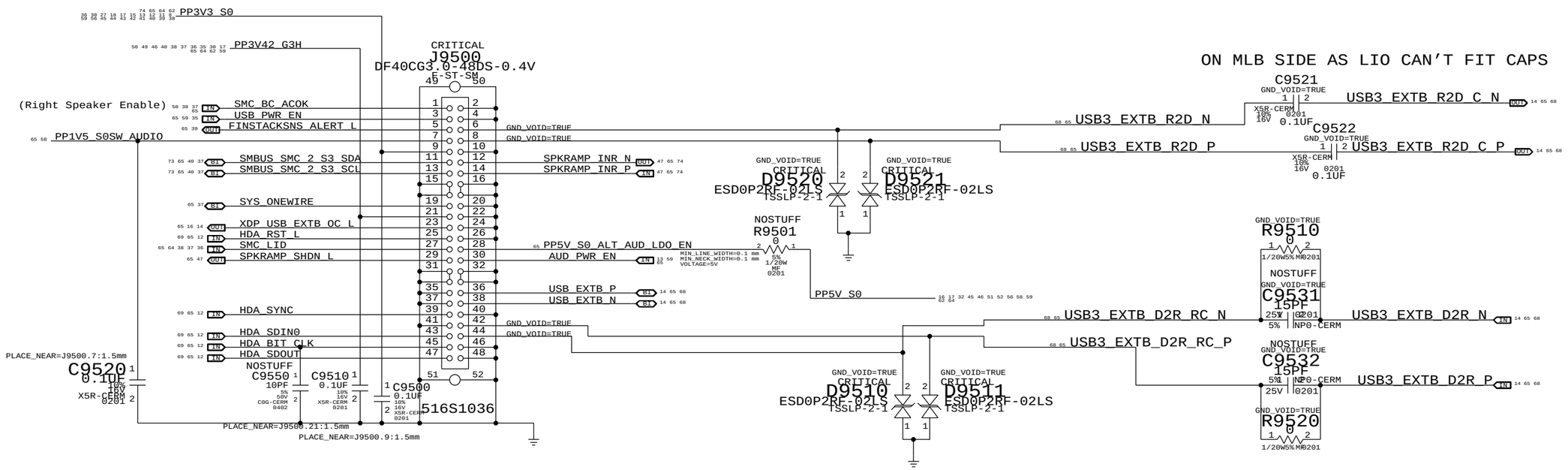

IO Ports

SYNC MASTER=CLEAN_J43 SYNC DATE=11/13/2012

PAGE TITLE
Left I/O (LIO) Connector

Apple Inc.

DRAWING NUMBER <SCH_NUM> SIZE D

REVISION <E4LABEL>

BRANCH <BRANCH>

PAGE 95 OF 121

SHEET 61 OF 76

NOTICE OF PROPRIETARY PROPERTY:
THE INFORMATION CONTAINED HEREIN IS THE PROPRIETARY PROPERTY OF APPLE INC.
THE POSESSOR AGREES TO THE FOLLOWING:
I TO MAINTAIN THIS DOCUMENT IN CONFIDENCE
II NOT TO REPRODUCE OR COPY IT
III NOT TO REVEAL OR PUBLISH IT IN WHOLE OR PART
IV ALL RIGHTS RESERVED

WWW.AliSaler.Com

"G3Hot" (Always-Present) Rails

PPBUS_G3H
MIN_LINE_WIDTH=0.6 mm
MIN_NECK_WIDTH=0.25 mm
VOLTAGE=8.6V
MAKE_BASE=TRUE

PPBUS_S5_HS_COMPUTING_ISNS
MIN_LINE_WIDTH=0.6 mm
MIN_NECK_WIDTH=0.25 mm
VOLTAGE=8.6V
MAKE_BASE=TRUE

PPBUS_S5_HS_OTHER_ISNS
MIN_LINE_WIDTH=0.6 mm
MIN_NECK_WIDTH=0.25 mm
VOLTAGE=8.6V
MAKE_BASE=TRUE

PPDCIN_G3H_ISOL
MIN_LINE_WIDTH=0.6 MM
MIN_NECK_WIDTH=0.25 MM
VOLTAGE=18.5V
MAKE_BASE=TRUE

PPDCIN_G3H
MIN_LINE_WIDTH=0.6 MM
MIN_NECK_WIDTH=0.25 MM
VOLTAGE=18.5V
MAKE_BASE=TRUE

PP3V42_G3H
MIN_LINE_WIDTH=0.6 MM
MIN_NECK_WIDTH=0.2 MM
VOLTAGE=3.42V
MAKE_BASE=TRUE

PPVRTC_G3H
MIN_LINE_WIDTH=0.2 MM
MIN_NECK_WIDTH=0.2 MM
VOLTAGE=3V
MAKE_BASE=TRUE

5V Rails

PP5V_S5
MIN_LINE_WIDTH=0.5 MM
MIN_NECK_WIDTH=0.2 MM
VOLTAGE=5V
MAKE_BASE=TRUE

PP5V_S4RS3
MIN_LINE_WIDTH=0.5 MM
MIN_NECK_WIDTH=0.175 MM
VOLTAGE=5V
MAKE_BASE=TRUE

PP5V_S0
MIN_LINE_WIDTH=0.5 mm
MIN_NECK_WIDTH=0.2 mm
VOLTAGE=5V
MAKE_BASE=TRUE

3.3V Rails

PP3V3_S5
MIN_LINE_WIDTH=0.5 MM VOLTAGE=3.3V
MIN_NECK_WIDTH=0.2 MM MAKE_BASE=TRUE

PP3V3_S4
MIN_LINE_WIDTH=0.60MM VOLTAGE=3.3V
MIN_NECK_WIDTH=0.20MM MAKE_BASE=TRUE

PP3V3_SUS
MIN_LINE_WIDTH=0.50MM VOLTAGE=3.3V
MIN_NECK_WIDTH=0.20MM MAKE_BASE=TRUE

PP3V3_S3
MIN_LINE_WIDTH=0.50MM VOLTAGE=3.3V
MIN_NECK_WIDTH=0.20MM MAKE_BASE=TRUE

PP3V3_S0
MIN_LINE_WIDTH=0.5 MM VOLTAGE=3.3V
MIN_NECK_WIDTH=0.20MM MAKE_BASE=TRUE

PP3V3_S4SW_SNS
MIN_LINE_WIDTH=0.50MM VOLTAGE=3.3V
MIN_NECK_WIDTH=0.20MM MAKE_BASE=TRUE

PP3V3_S0SW_SSD
MIN_LINE_WIDTH=0.5 MM VOLTAGE=3.3V
MIN_NECK_WIDTH=0.20MM MAKE_BASE=TRUE

PP3V3_S4_TBTAPWR
MIN_LINE_WIDTH=0.38 MM VOLTAGE=3.3V
MIN_NECK_WIDTH=0.20 MM MAKE_BASE=TRUE

LCDBKLT Rail

PPHV_S0SW_LCDBKLT
MIN_LINE_WIDTH=0.5 MM
MIN_NECK_WIDTH=0.375 MM
VOLTAGE=50V
MAKE_BASE=TRUE

1.8V/1.5V/1.2V/1.05V Rails

PP1V8_S3
MIN_LINE_WIDTH=0.6MM
MIN_NECK_WIDTH=0.2MM
VOLTAGE=1.2V
MAKE_BASE=TRUE

2A max supply

PP1V2_S3
MIN_LINE_WIDTH=0.6 MM
MIN_NECK_WIDTH=0.1 MM
VOLTAGE=1.2V
MAKE_BASE=TRUE

PP1V05_SUS
MIN_LINE_WIDTH=0.4 MM
MIN_NECK_WIDTH=0.2 MM
VOLTAGE=1.05V
MAKE_BASE=TRUE

PP1V5_S0
MIN_LINE_WIDTH=0.3 mm
MIN_NECK_WIDTH=0.17 mm
VOLTAGE=1.5V
MAKE_BASE=TRUE

PP0V6_S0_DDRVTT
MIN_LINE_WIDTH=0.6 mm
MIN_NECK_WIDTH=0.17 mm
VOLTAGE=0.75V
MAKE_BASE=TRUE

PP1V05_S0
MIN_LINE_WIDTH=0.6 MM
MIN_NECK_WIDTH=0.175 MM
VOLTAGE=1.05V
MAKE_BASE=TRUE

? mA

PP1V05_S0SW_PCH_HSIO
MIN_LINE_WIDTH=0.6 MM
MIN_NECK_WIDTH=0.2 MM
VOLTAGE=1.05V
MAKE_BASE=TRUE

1.84A

TBT Rails (off when no cable)

PP15V_TBT
MIN_LINE_WIDTH=0.4 MM
MIN_NECK_WIDTH=0.2 MM
VOLTAGE=17.8V
MAKE_BASE=TRUE

PP3V3_TBTLC
MIN_LINE_WIDTH=0.4 MM
MIN_NECK_WIDTH=0.2 MM
VOLTAGE=3.3V
MAKE_BASE=TRUE

PP1V05_TBTLC
MIN_LINE_WIDTH=0.4 MM
MIN_NECK_WIDTH=0.2 MM
VOLTAGE=1.05V
MAKE_BASE=TRUE

PP1V05_TBTCIO
MIN_LINE_WIDTH=0.4 MM
MIN_NECK_WIDTH=0.2 MM
VOLTAGE=1.05V
MAKE_BASE=TRUE

PPVIN_S4SW_TBTBST_FET
VOLTAGE=8.6V

CPU "VCORE" RAILS

PPVCC_S0_CPU
MIN_LINE_WIDTH=0.6 MM
MIN_NECK_WIDTH=0.25 MM
VOLTAGE=1.8V
MAKE_BASE=TRUE

Digital Ground

GND
VOLTAGE=0V
MIN_NECK_WIDTH=0.075MM
MIN_LINE_WIDTH=0.6MM

SYNC_MASTER=J41_MLB SYNC_DATE=01/30/2013

PAGE TITLE
Power Aliases

Apple Inc.

DRAWING NUMBER <SCH_NUM> SIZE D
REVISION <E4LABEL>
BRANCH <BRANCH>
PAGE 100 OF 121
SHEET 62 OF 76

NOTICE OF PROPRIETARY PROPERTY:
THE INFORMATION CONTAINED HEREIN IS THE PROPRIETARY PROPERTY OF APPLE INC.
THE POSESSOR AGREES TO THE FOLLOWING:
I TO MAINTAIN THIS DOCUMENT IN CONFIDENCE
II NOT TO REPRODUCE OR COPY IT
III NOT TO REVEAL OR PUBLISH IT IN WHOLE OR PART
IV ALL RIGHTS RESERVED

WWW.AliSaler.Com

LPDDR3 Command/Address

7	=MEM_A_A<5>	TRUE	MEM_A_CAA<0>	20 24 70
7	=MEM_A_A<9>	TRUE	MEM_A_CAA<1>	20 24 70
7	=MEM_A_A<6>	TRUE	MEM_A_CAA<2>	20 24 70
7	=MEM_A_A<8>	TRUE	MEM_A_CAA<3>	20 24 70
7	=MEM_A_A<7>	TRUE	MEM_A_CAA<4>	20 24 70
7	=MEM_A_BA<2>	TRUE	MEM_A_CAA<5>	20 24 70
70 63 24 20 7	MEM_A_CAA<6>	TRUE	MEM_A_CAA<6>	7 20 24 63 70
7	=MEM_A_A<11>	TRUE	MEM_A_CAA<7>	20 24 70
7	=MEM_A_A<15>	TRUE	MEM_A_CAA<8>	20 24 70
7	=MEM_A_A<14>	TRUE	MEM_A_CAA<9>	20 24 70
7	=MEM_A_A<13>	TRUE	MEM_A_CAB<0>	21 24 70
7	=MEM_A_CAS_L	TRUE	MEM_A_CAB<1>	21 24 70
7	=MEM_A_WE_L	TRUE	MEM_A_CAB<2>	21 24 70
7	=MEM_A_RAS_L	TRUE	MEM_A_CAB<3>	21 24 70
7	=MEM_A_BA<0>	TRUE	MEM_A_CAB<4>	21 24 70
7	=MEM_A_A<2>	TRUE	MEM_A_CAB<5>	21 24 70
70 63 24 21 7	MEM_A_CAB<6>	TRUE	MEM_A_CAB<6>	7 21 24 63 70
7	=MEM_A_A<10>	TRUE	MEM_A_CAB<7>	21 24 70
7	=MEM_A_A<1>	TRUE	MEM_A_CAB<8>	21 24 70
7	=MEM_A_A<0>	TRUE	MEM_A_CAB<9>	21 24 70
70 63 24 21 20 7	MEM_A_ODT<0>	TRUE	MEM_A_ODT<0>	7 20 21 24 63 70
63 7	TP_LPDDR3_RSVD1	TRUE	TP_LPDDR3_RSVD1	7 63
63 7	TP_LPDDR3_RSVD2	TRUE	TP_LPDDR3_RSVD2	7 63
7	=MEM_B_A<5>	TRUE	MEM_B_CAA<0>	22 24 70
7	=MEM_B_A<9>	TRUE	MEM_B_CAA<1>	22 24 70
7	=MEM_B_A<6>	TRUE	MEM_B_CAA<2>	22 24 70
7	=MEM_B_A<8>	TRUE	MEM_B_CAA<3>	22 24 70
7	=MEM_B_A<7>	TRUE	MEM_B_CAA<4>	22 24 70
7	=MEM_B_BA<2>	TRUE	MEM_B_CAA<5>	22 24 70
70 63 24 22 7	MEM_B_CAA<6>	TRUE	MEM_B_CAA<6>	7 22 24 63 70
7	=MEM_B_A<11>	TRUE	MEM_B_CAA<7>	22 24 70
7	=MEM_B_A<15>	TRUE	MEM_B_CAA<8>	22 24 70
7	=MEM_B_A<14>	TRUE	MEM_B_CAA<9>	22 24 70
7	=MEM_B_A<13>	TRUE	MEM_B_CAB<0>	23 24 70
7	=MEM_B_CAS_L	TRUE	MEM_B_CAB<1>	23 24 70
7	=MEM_B_WE_L	TRUE	MEM_B_CAB<2>	23 24 70
7	=MEM_B_RAS_L	TRUE	MEM_B_CAB<3>	23 24 70
7	=MEM_B_BA<0>	TRUE	MEM_B_CAB<4>	23 24 70
7	=MEM_B_A<2>	TRUE	MEM_B_CAB<5>	23 24 70
70 63 24 23 7	MEM_B_CAB<6>	TRUE	MEM_B_CAB<6>	7 23 24 63 70
7	=MEM_B_A<10>	TRUE	MEM_B_CAB<7>	23 24 70
7	=MEM_B_A<1>	TRUE	MEM_B_CAB<8>	23 24 70
7	=MEM_B_A<0>	TRUE	MEM_B_CAB<9>	23 24 70
70 63 24 23 22 7	MEM_B_ODT<0>	TRUE	MEM_B_ODT<0>	7 22 23 24 63 70
63 7	TP_LPDDR3_RSVD3	TRUE	TP_LPDDR3_RSVD3	7 63
63 7	TP_LPDDR3_RSVD4	TRUE	TP_LPDDR3_RSVD4	7 63

Memory Bit/Byte Swizzle

20	=MEM_A_DQ<0>	TRUE	MEM_A_DQ<9>	7 70
20	=MEM_A_DQ<1>	TRUE	MEM_A_DQ<12>	7 70
20	=MEM_A_DQ<2>	TRUE	MEM_A_DQ<10>	7 70
20	=MEM_A_DQ<3>	TRUE	MEM_A_DQ<11>	7 70
20	=MEM_A_DQ<4>	TRUE	MEM_A_DQ<8>	7 70
20	=MEM_A_DQ<5>	TRUE	MEM_A_DQ<13>	7 70
20	=MEM_A_DQ<6>	TRUE	MEM_A_DQ<14>	7 70
20	=MEM_A_DQ<7>	TRUE	MEM_A_DQ<15>	7 70
20	=MEM_A_DQ<8>	TRUE	MEM_A_DQ<0>	7 70
20	=MEM_A_DQ<9>	TRUE	MEM_A_DQ<1>	7 70
20	=MEM_A_DQ<10>	TRUE	MEM_A_DQ<2>	7 70
20	=MEM_A_DQ<11>	TRUE	MEM_A_DQ<7>	7 70
20	=MEM_A_DQ<12>	TRUE	MEM_A_DQ<4>	7 70
20	=MEM_A_DQ<13>	TRUE	MEM_A_DQ<5>	7 70
20	=MEM_A_DQ<14>	TRUE	MEM_A_DQ<3>	7 70
20	=MEM_A_DQ<15>	TRUE	MEM_A_DQ<6>	7 70
20	=MEM_A_DQ<16>	TRUE	MEM_A_DQ<29>	7 70
20	=MEM_A_DQ<17>	TRUE	MEM_A_DQ<28>	7 70
20	=MEM_A_DQ<18>	TRUE	MEM_A_DQ<27>	7 70
20	=MEM_A_DQ<19>	TRUE	MEM_A_DQ<31>	7 70
20	=MEM_A_DQ<20>	TRUE	MEM_A_DQ<24>	7 70
20	=MEM_A_DQ<21>	TRUE	MEM_A_DQ<25>	7 70
20	=MEM_A_DQ<22>	TRUE	MEM_A_DQ<26>	7 70
20	=MEM_A_DQ<23>	TRUE	MEM_A_DQ<30>	7 70
20	=MEM_A_DQ<24>	TRUE	MEM_A_DQ<18>	7 70
20	=MEM_A_DQ<25>	TRUE	MEM_A_DQ<21>	7 70
20	=MEM_A_DQ<26>	TRUE	MEM_A_DQ<16>	7 70
20	=MEM_A_DQ<27>	TRUE	MEM_A_DQ<23>	7 70
20	=MEM_A_DQ<28>	TRUE	MEM_A_DQ<20>	7 70
20	=MEM_A_DQ<29>	TRUE	MEM_A_DQ<19>	7 70
20	=MEM_A_DQ<30>	TRUE	MEM_A_DQ<22>	7 70
20	=MEM_A_DQ<31>	TRUE	MEM_A_DQ<17>	7 70
21	=MEM_A_DQ<32>	TRUE	MEM_A_DQ<41>	7 70
21	=MEM_A_DQ<33>	TRUE	MEM_A_DQ<44>	7 70
21	=MEM_A_DQ<34>	TRUE	MEM_A_DQ<46>	7 70
21	=MEM_A_DQ<35>	TRUE	MEM_A_DQ<47>	7 70
21	=MEM_A_DQ<36>	TRUE	MEM_A_DQ<40>	7 70
21	=MEM_A_DQ<37>	TRUE	MEM_A_DQ<45>	7 70
21	=MEM_A_DQ<38>	TRUE	MEM_A_DQ<42>	7 70
21	=MEM_A_DQ<39>	TRUE	MEM_A_DQ<43>	7 70
21	=MEM_A_DQ<40>	TRUE	MEM_A_DQ<36>	7 70
21	=MEM_A_DQ<41>	TRUE	MEM_A_DQ<37>	7 70
21	=MEM_A_DQ<42>	TRUE	MEM_A_DQ<34>	7 70
21	=MEM_A_DQ<43>	TRUE	MEM_A_DQ<39>	7 70
70 63 21 7	MEM_A_DQ<32>	TRUE	MEM_A_DQ<32>	7 21 63 70
21	=MEM_A_DQ<45>	TRUE	MEM_A_DQ<33>	7 70
21	=MEM_A_DQ<46>	TRUE	MEM_A_DQ<35>	7 70
21	=MEM_A_DQ<47>	TRUE	MEM_A_DQ<38>	7 70
21	=MEM_A_DQ<48>	TRUE	MEM_A_DQ<52>	7 70
21	=MEM_A_DQ<49>	TRUE	MEM_A_DQ<51>	7 70
21	=MEM_A_DQ<50>	TRUE	MEM_A_DQ<48>	7 70
21	=MEM_A_DQ<51>	TRUE	MEM_A_DQ<49>	7 70
21	=MEM_A_DQ<52>	TRUE	MEM_A_DQ<53>	7 70
21	=MEM_A_DQ<53>	TRUE	MEM_A_DQ<50>	7 70
21	=MEM_A_DQ<54>	TRUE	MEM_A_DQ<54>	7 70
21	=MEM_A_DQ<55>	TRUE	MEM_A_DQ<55>	7 70
21	=MEM_A_DQ<56>	TRUE	MEM_A_DQ<58>	7 70
21	=MEM_A_DQ<57>	TRUE	MEM_A_DQ<62>	7 70
21	=MEM_A_DQ<58>	TRUE	MEM_A_DQ<60>	7 70
21	=MEM_A_DQ<59>	TRUE	MEM_A_DQ<61>	7 70
21	=MEM_A_DQ<60>	TRUE	MEM_A_DQ<59>	7 70
21	=MEM_A_DQ<61>	TRUE	MEM_A_DQ<63>	7 70
21	=MEM_A_DQ<62>	TRUE	MEM_A_DQ<57>	7 70
21	=MEM_A_DQ<63>	TRUE	MEM_A_DQ<56>	7 70
20	=MEM_A_DQS_P<0>	TRUE	MEM_A_DQS_P<1>	7 70
20	=MEM_A_DQS_N<0>	TRUE	MEM_A_DQS_N<1>	7 70
20	=MEM_A_DQS_P<1>	TRUE	MEM_A_DQS_P<0>	7 70
20	=MEM_A_DQS_N<1>	TRUE	MEM_A_DQS_N<0>	7 70
20	=MEM_A_DQS_P<2>	TRUE	MEM_A_DQS_P<3>	7 70
20	=MEM_A_DQS_N<2>	TRUE	MEM_A_DQS_N<3>	7 70
20	=MEM_A_DQS_P<3>	TRUE	MEM_A_DQS_P<2>	7 70
20	=MEM_A_DQS_N<3>	TRUE	MEM_A_DQS_N<2>	7 70
21	=MEM_A_DQS_P<4>	TRUE	MEM_A_DQS_P<5>	7 70
21	=MEM_A_DQS_N<4>	TRUE	MEM_A_DQS_N<5>	7 70
21	=MEM_A_DQS_P<5>	TRUE	MEM_A_DQS_P<4>	7 70
21	=MEM_A_DQS_N<5>	TRUE	MEM_A_DQS_N<4>	7 70
70 63 21 7	MEM_A_DQS_P<6>	TRUE	MEM_A_DQS_P<6>	7 21 63 70
70 63 21 7	MEM_A_DQS_N<6>	TRUE	MEM_A_DQS_N<6>	7 21 63 70
21	=MEM_A_DQS_P<7>	TRUE	MEM_A_DQS_P<7>	7 70
21	=MEM_A_DQS_N<7>	TRUE	MEM_A_DQS_N<7>	7 70

22	=MEM_B_DQ<0>	TRUE	MEM_B_DQ<12>	7 70
22	=MEM_B_DQ<1>	TRUE	MEM_B_DQ<9>	7 70
22	=MEM_B_DQ<2>	TRUE	MEM_B_DQ<10>	7 70
22	=MEM_B_DQ<3>	TRUE	MEM_B_DQ<11>	7 70
22	=MEM_B_DQ<4>	TRUE	MEM_B_DQ<13>	7 70
22	=MEM_B_DQ<5>	TRUE	MEM_B_DQ<8>	7 70
22	=MEM_B_DQ<6>	TRUE	MEM_B_DQ<14>	7 70
22	=MEM_B_DQ<7>	TRUE	MEM_B_DQ<15>	7 70
22	=MEM_B_DQ<8>	TRUE	MEM_B_DQ<0>	7 70
22	=MEM_B_DQ<9>	TRUE	MEM_B_DQ<1>	7 70
22	=MEM_B_DQ<10>	TRUE	MEM_B_DQ<2>	7 70
22	=MEM_B_DQ<11>	TRUE	MEM_B_DQ<7>	7 70
22	=MEM_B_DQ<12>	TRUE	MEM_B_DQ<4>	7 70
22	=MEM_B_DQ<13>	TRUE	MEM_B_DQ<5>	7 70
22	=MEM_B_DQ<14>	TRUE	MEM_B_DQ<6>	7 70
22	=MEM_B_DQ<15>	TRUE	MEM_B_DQ<3>	7 70
22	=MEM_B_DQ<16>	TRUE	MEM_B_DQ<28>	7 70
22	=MEM_B_DQ<17>	TRUE	MEM_B_DQ<29>	7 70
22	=MEM_B_DQ<18>	TRUE	MEM_B_DQ<30>	7 70
22	=MEM_B_DQ<19>	TRUE	MEM_B_DQ<27>	7 70
22	=MEM_B_DQ<20>	TRUE	MEM_B_DQ<24>	7 70
22	=MEM_B_DQ<21>	TRUE	MEM_B_DQ<25>	7 70
22	=MEM_B_DQ<22>	TRUE	MEM_B_DQ<31>	7 70
22	=MEM_B_DQ<23>	TRUE	MEM_B_DQ<26>	7 70
22	=MEM_B_DQ<24>	TRUE	MEM_B_DQ<20>	7 70
22	=MEM_B_DQ<25>	TRUE	MEM_B_DQ<16>	7 70
22	=MEM_B_DQ<26>	TRUE	MEM_B_DQ<23>	7 70
22	=MEM_B_DQ<27>	TRUE	MEM_B_DQ<22>	7 70
22	=MEM_B_DQ<28>	TRUE	MEM_B_DQ<21>	7 70
22	=MEM_B_DQ<29>	TRUE	MEM_B_DQ<17>	7 70
22	=MEM_B_DQ<30>	TRUE	MEM_B_DQ<18>	7 70
22	=MEM_B_DQ<31>	TRUE	MEM_B_DQ<19>	7 70
23	=MEM_B_DQ<32>	TRUE	MEM_B_DQ<44>	7 70
23	=MEM_B_DQ<33>	TRUE	MEM_B_DQ<41>	7 70
23	=MEM_B_DQ<34>	TRUE	MEM_B_DQ<42>	7 70
23	=MEM_B_DQ<35>	TRUE	MEM_B_DQ<43>	7 70
23	=MEM_B_DQ<36>	TRUE	MEM_B_DQ<45>	7 70
23	=MEM_B_DQ<37>	TRUE	MEM_B_DQ<40>	7 70
23	=MEM_B_DQ<38>	TRUE	MEM_B_DQ<46>	7 70
23	=MEM_B_DQ<39>	TRUE	MEM_B_DQ<47>	7 70
23	=MEM_B_DQ<40>	TRUE	MEM_B_DQ<32>	7 70
70 63 23 7	MEM_B_DQ<33>	TRUE	MEM_B_DQ<33>	7 23 63 70
23	=MEM_B_DQ<42>	TRUE	MEM_B_DQ<34>	7 70
23	=MEM_B_DQ<43>	TRUE	MEM_B_DQ<39>	7 70
23	=MEM_B_DQ<44>	TRUE	MEM_B_DQ<36>	7 70
23	=MEM_B_DQ<45>	TRUE	MEM_B_DQ<37>	7 70
23	=MEM_B_DQ<46>	TRUE	MEM_B_DQ<38>	7 70
23	=MEM_B_DQ<47>	TRUE	MEM_B_DQ<35>	7 70
23	=MEM_B_DQ<48>	TRUE	MEM_B_DQ<57>	7 70
23	=MEM_B_DQ<49>	TRUE	MEM_B_DQ<56>	7 70
23	=MEM_B_DQ<50>	TRUE	MEM_B_DQ<60>	7 70
23	=MEM_B_DQ<51>	TRUE	MEM_B_DQ<59>	7 70
23	=MEM_B_DQ<52>	TRUE	MEM_B_DQ<63>	7 70
23	=MEM_B_DQ<53>	TRUE	MEM_B_DQ<62>	7 70
23	=MEM_B_DQ<54>	TRUE	MEM_B_DQ<58>	7 70
23	=MEM_B_DQ<55>	TRUE	MEM_B_DQ<61>	7 70
23	=MEM_B_DQ<56>	TRUE	MEM_B_DQ<49>	7 70
23	=MEM_B_DQ<57>	TRUE	MEM_B_DQ<51>	7 70
23	=MEM_B_DQ<58>	TRUE	MEM_B_DQ<48>	7 70
23	=MEM_B_DQ<59>	TRUE	MEM_B_DQ<53>	7 70
23	=MEM_B_DQ<60>	TRUE	MEM_B_DQ<52>	7 70
23	=MEM_B_DQ<61>	TRUE	MEM_B_DQ<55>	7 70
23	=MEM_B_DQ<62>	TRUE	MEM_B_DQ<50>	7 70
23	=MEM_B_DQ<63>	TRUE	MEM_B_DQ<54>	7 70
22	=MEM_B_DQS_P<0>	TRUE	MEM_B_DQS_P<1>	7 70
22	=MEM_B_DQS_N<0>	TRUE	MEM_B_DQS_N<1>	7 70
22	=MEM_B_DQS_P<1>	TRUE	MEM_B_DQS_P<0>	7 70
22	=MEM_B_DQS_N<1>	TRUE	MEM_B_DQS_N<0>	7 70
22	=MEM_B_DQS_P<2>	TRUE	MEM_B_DQS_P<3>	7 70
22	=MEM_B_DQS_N<2>	TRUE	MEM_B_DQS_N<3>	7 70
22	=MEM_B_DQS_P<3>	TRUE	MEM_B_DQS_P<2>	7 70
22	=MEM_B_DQS_N<3>	TRUE	MEM_B_DQS_N<2>	7 70
23	=MEM_B_DQS_P<4>	TRUE	MEM_B_DQS_P<5>	7 70
23	=MEM_B_DQS_N<4>	TRUE	MEM_B_DQS_N<5>	7 70
23	=MEM_B_DQS_P<5>	TRUE	MEM_B_DQS_P<4>	7 70
23	=MEM_B_DQS_N<5>	TRUE	MEM_B_DQS_N<4>	7 70
23	=MEM_B_DQS_P<6>	TRUE	MEM_B_DQS_P<7>	7 70
23	=MEM_B_DQS_N<6>	TRUE	MEM_B_DQS_N<7>	7 70
70 63 23 7	MEM_B_DQS_P<6>	TRUE	MEM_B_DQS_P<6>	7 23 63 70
70 63 23 7	MEM_B_DQS_N<6>	TRUE	MEM_B_DQS_N<6>	7 23 63 70

SYNC_MASTER=J41_MLB SYNC_DATE=08/30/2012

PAGE TITLE
Signal Aliases

Apple Inc.

DRAWING NUMBER <SCH_NUM> SIZE D

REVISION <E4LABEL>

BRANCH <BRANCH>

PAGE 102 OF 121

SHEET 63 OF 76

NOTICE OF PROPRIETARY PROPERTY:
THE INFORMATION CONTAINED HEREIN IS THE PROPRIETARY PROPERTY OF APPLE INC.
THE POSESSOR AGREES TO THE FOLLOWING:
I TO MAINTAIN THIS DOCUMENT IN CONFIDENCE
II NOT TO REPRODUCE OR COPY IT
III NOT TO REVEAL OR PUBLISH IT IN WHOLE OR PART
IV ALL RIGHTS RESERVED

WWW.AliSaler.Com

Functional Test Points

J3501: AirPort / BT Connector

FUNC_TEST

TRUE	PP3V3_WLAN	(Need 6 TPs)	29 37 38 39 41
TRUE	WIFI_EVENT_L		29 37 38
TRUE	PCIE_AP_R2D_N		29 69
TRUE	PCIE_AP_R2D_P		29 69
TRUE	PCIE_CLK100M_AP_N		12 29 69
TRUE	PCIE_CLK100M_AP_P		12 29 69
TRUE	PCIE_AP_D2R_P		14 29 69
TRUE	PCIE_AP_D2R_N		14 29 69
TRUE	PCIE_WAKE_L		13 29 31
TRUE	AP_RESET_CONN_L		29
TRUE	AP_CLKREQ_Q_L		29
TRUE	USB_BT_CONN_P		29 68
TRUE	USB_BT_CONN_N		29 68
TRUE	PP3V3_S4		29 33 36 38 39 58 62 64

(Need to add 8 GND TPs)

J3700: SSD Connector

FUNC_TEST

TRUE	PP3V3_S0SW_SSD_FLT	(Need 5 TPs)	30
TRUE	PCIE_SSD_R2D_N<3..0>		30 67
TRUE	PCIE_SSD_R2D_P<3..0>		30 67
TRUE	PP3V3_S0		42 43 44 45 56 59 61 62 13 12 13 15 17 18 27 30 36 38 39 40 41 62 64 65 74
TRUE	SSD_RESET_CONN_L		30
TRUE	SSD_CLKREQ_CONN_L		30
TRUE	SMC_OOB1_R2D_CONN_L		30
TRUE	SMC_OOB1_D2R_CONN_L		30
TRUE	SSD_PCIE_SEL_L		16 30
TRUE	SSD_DEVSLP		15 30
TRUE	SSD_PWRFAIL_WARN_L		
TRUE	SSD_PWR_EN		15 30 58 59
TRUE	PCIE_SSD_D2R_N<3..0>		12 30 67
TRUE	PCIE_SSD_D2R_P<3..0>		12 30 67
TRUE	PCIE_CLK100M_SSD_N		12 30 67
TRUE	PCIE_CLK100M_SSD_P		12 30 67

(Need to add 6 GND TPs)

J4002: Camera Connector

FUNC_TEST

TRUE	MIPI_CLK_CONN_N		32 72
TRUE	MIPI_CLK_CONN_P		32 72
TRUE	CAM_SENSOR_WAKE_L_CONN		32
TRUE	MIPI_DATA_CONN_N		32 72
TRUE	MIPI_DATA_CONN_P		32 72
TRUE	SMBUS_SMC_1_S0_SDA		14 32 37 40 43 44 69 73
TRUE	SMBUS_SMC_1_S0_SCL		14 32 37 40 43 44 69 73
TRUE	I2C_CAM_SCK		31 32
TRUE	I2C_CAM_SDA		31 32
TRUE	PP5V_S3RS0_ALSCAM_F	(Need TBD TPs)	32

(Need to add TBD GND TPs)

J6100: LPC+SPI Connector

FUNC_TEST

TRUE	PP3V42_G3H		65
TRUE	PP5V_S0		17 30 35 36 37 38 40 46 49 50 59 61 62 64
TRUE	LPC_CLK24M_LPCPLUS		16 17 32 45 51 52 56 58 59 61 62 64
TRUE	LPC_AD<3..0>		17 46 69
TRUE	SPI_ALT_MOSI		14 37 46 69
TRUE	XDP_LPCPLUS_GPIO		46
TRUE	LPCPLUS_RESET_L		15 16 46
TRUE	SMC_TDO		18 46 69
TRUE	TP_SMC_TRST_L		37 38 46
TRUE	TP_SMC_MD1		46
TRUE	SMC_TX_L		46
TRUE	SPI_ALT_MISO		37 38 46
TRUE	LPC_FRAME_L		46
TRUE	SPIROM_USE_MLB		14 37 46 69
TRUE	PM_CLKRUN_L		15 46
TRUE	SPI_ALT_CLK		13 37 46
TRUE	SPI_ALT_CS_L		46
TRUE	LPC_SERIRQ		46
TRUE	LPC_PWRDWN_L		15 37 46
TRUE	SMC_TDI		13 37 46
TRUE	SMC_TCK		37 38 46
TRUE	SMC_RESET_L		37 38 46
TRUE	SMC_ROMBOOT		37 38 46 50
TRUE	SMC_RX_L		38 46
TRUE	SMC_TMS		37 38 46

(Need to add 6 GND TPs)

J6000: Fan Connector

FUNC_TEST

TRUE	PP5V_S0		16 17 32 45 46 51 52 56 58 59 61 62 64
TRUE	FAN_RT_TACH		45
TRUE	FAN_RT_PWM		45

(Need to add 1 GND TP)

J4800: IPD Flex Connector

FUNC_TEST

TRUE	SMC_LID		36 37 38 61 65
TRUE	TPAD_SPI_MISO_R		36
TRUE	USB_TPAD_P		14 36 68
TRUE	USB_TPAD_N		14 36 68
TRUE	TPAD_SPI_CLK_R		36
TRUE	TPAD_WAKE_L		36
TRUE	TPAD_SPI_MOSI_R		36
TRUE	PP3V3_S4_IPD		36
TRUE	TPAD_SPI_CS_R_L		36
TRUE	TPAD_SPI_IF_EN_CONN		36
TRUE	TPAD_SPI_INT_S4_WAKE_L_CONN		36
TRUE	PP5V_S4_IPD		36
TRUE	TPAD_USB_IF_EN_CONN		36
TRUE	SMBUS_SMC_3_SDA		36 37 40 44 73
TRUE	SMBUS_SMC_3_SCL		36 37 40 44 73
TRUE	SMC_LSOC_RST_L		36 38
TRUE	PP3V42_G3H		17 30 35 36 37 38 40 46 49 50 59 61 62 64 65
TRUE	SMC_ONOFF_L		36 37 38

(Need to add 5 GND TPs)

J7000: DC-In Connector

FUNC_TEST

TRUE	PPDCIN_G3H	(Need 4 TPs)	42 50 62 64
TRUE	PP5V_S4RS3	(Need 3 TPs)	32 35 47 49 54 55 58 62

(Need to add 5 GND TPs)

J6404: Speaker Connector

FUNC_TEST

TRUE	SPKRAMP_ROUT_P		47 74
TRUE	SPKRAMP_ROUT_N		47 74

(Need to add 3 GND TPs)

J6950: Battery Connector

FUNC_TEST

TRUE	PPVBAT_G3H_CONN	(Need 4 TPs)	48 50
TRUE	SMBUS_SMC_5_G3_SCL		37 40 48 50 73
TRUE	SMBUS_SMC_5_G3_SDA		37 40 48 50 73
TRUE	SYS_DETECT_L		48

(Need to add 4 GND TPs near J7050 and 1 for shield)

J8300: Internal DP Connector

FUNC_TEST

TRUE	PPHV_S0SW_LCDBKLT	(Need 2 TPs)	56 60 62
TRUE	LED_RETURN_6		56 60
TRUE	LED_RETURN_5		56 60
TRUE	LED_RETURN_4		56 60
TRUE	LED_RETURN_3		56 60
TRUE	LED_RETURN_2		56 60
TRUE	LED_RETURN_1		56 60
TRUE	DP_INT_HPD_CONN		60
TRUE	I2C_TCON_SDA_R		60
TRUE	I2C_TCON_SCL_R		60
TRUE	PP3V3_S0SW_LCD_UF	(Need 2 TPs)	60
TRUE	DP_INT_AUX_CH_C_N		60 67
TRUE	DP_INT_AUX_CH_C_P		60 67
TRUE	DP_INT_ML_P<0>		60 67
TRUE	DP_INT_ML_N<0>		60 67

(Need to add 5 GND TPs)

J7715: KB BKLT Connector

FUNC_TEST

TRUE	KBDLED_ANODE		56
TRUE	KBDLED_FB		56

(Need to add 2 GND TPs)

J1800: XDP Connector

(Only a subset are needed for FCT HVM test fixture)

FUNC_TEST

1776	TRUE	XDP_CPU_TCK	6 16 67
1777	TRUE	XDP_PCH_TCK	12 16 69
1778	TRUE	XDP_CPU_TDI	6 16 67
1779	TRUE	XDP_CPU_TDO	6 16 67
1780	TRUE	XDP_CPUPCH_TRST_L	6 12 16 67
1781	TRUE	XDP_CPU_TMS	6 16 67
1782	TRUE	XDP_PCH_TMS	12 16 69
1783	TRUE	XDP_PCH_TDI	12 16 69
1784	TRUE	XDP_PCH_TDO	12 16 69
1785	TRUE	XDP_CPU_PREQ_L	6 16 67
1786	TRUE	XDP_CPU_PRDY_L	6 16 67
1787	TRUE	XDP_CPU_VCCST_PWRGD	16
1788	TRUE	PM_RSMRST_L	13 59
1789	TRUE	XDP_SYS_PWROK	16
1790	TRUE	PM_SYSRST_L	13 17 37
1791	TRUE	CPU_CFG<3>	6 16 67
1792	TRUE	PP1V05_S0	6 8 11 15 16 17 27 38 42 51 55 58 59 62 64

(Need to add 2 GND TPs)

1793	TRUE	GND

Misc Voltages & Control Signals

FUNC_TEST

TRUE	PPBUS_G3H		27 41 42 49 50 56 62
TRUE	PPVIN_S4SW_TBTBST_FET		27 62
TRUE	PPBUS_S5_HS_COMPUTING_ISNS		41 51 52 53 55 62
TRUE	PPDCIN_G3H		49 50 62 64
TRUE	PP3V42_G3H		17 30 35 36 37 38 40 46 49 50 59 61 62 64 65
TRUE	PPVRTC_G3H		8 12 13 17 62
TRUE	PP3V3_S5		8 11 13 15 16 17 18 28 29 34 42 57 58 59 60 62 74
TRUE	PP3V3_SUS		8 11 14 18 46 57 58 59 62
TRUE	PP3V3_S3		15 18 19 33 36 40 41 58 62
TRUE	PP3V3_S0		62 64 65 74 8 12 13 15 17 18 27 30 36 38 39 40 41 42 43 44 45 56 59 61
TRUE	PP3V3_S0SW_SSD		30 41 62
TRUE	PP1V5_S0		8 57 58 59 62
TRUE	PP1V05_S0		6 8 11 15 16 17 27 38 42 51 55 58 59 62 64
TRUE	PP15V_TBT		27 28 62
TRUE	PP3V3_TBTLC		15 17 25 26 27 62
TRUE	PP1V05_TBTLC		26 27 62
TRUE	PPVCC_S0_CPU		8 10 42 52 62
TRUE	PP1V05_TBTCIO		26 27 62
TRUE	PPBUS_S5_HS_OTHER_ISNS		41 54 62
TRUE	PPDCIN_G3H_ISOL		42 49 50 62
TRUE	PP3V3_S4		29 33 36 38 39 58 62 64

(Need to add 27 GND TPs)

NO_TEST Nets

		NO_TEST	MAKE_BASE			
64	NC_PCIE_CLK100M_SDP	TRUE	TRUE	NC_PCIE_CLK100M_SDP	64	CPU/PCH
64	NC_PCIE_CLK100M_SDN	TRUE	TRUE	NC_PCIE_CLK100M_SDN	64	
64 12	NC_PCIE_CLK100M_FWP	TRUE	TRUE	NC_PCIE_CLK100M_FWP	12 64	
64 12	NC_PCIE_CLK100M_FWN	TRUE	TRUE	NC_PCIE_CLK100M_FWN	12 64	
64 14	NC_PCIE_FW_D2RP	TRUE	TRUE	NC_PCIE_FW_D2RP	14 64	
64 14	NC_PCIE_FW_D2RN	TRUE	TRUE	NC_PCIE_FW_D2RN	14 64	
64 14	NC_PCIE_FW_R2D_CP	TRUE	TRUE	NC_PCIE_FW_R2D_CP	14 64	
64 14	NC_PCIE_FW_R2D_CN	TRUE	TRUE	NC_PCIE_FW_R2D_CN	14 64	
64 14	NC_USB_IRP	TRUE	TRUE	NC_USB_IRP	14 64	
64 14	NC_USB_IRN	TRUE	TRUE	NC_USB_IRN	14 64	
64 14	NC_USB_CAMERAP	TRUE	TRUE	NC_USB_CAMERAP	14 64	
64 14	NC_USB_CAMERAN	TRUE	TRUE	NC_USB_CAMERAN	14 64	
64 14	NC_USB_SDP	TRUE	TRUE	NC_USB_SDP	14 64	
64 14	NC_USB_SDN	TRUE	TRUE	NC_USB_SDN	14 64	
67	DP_INT_ML_C_P<3..1>	TRUE	TRUE	NC_INT_ML_CP<3..1>	5	
67	DP_INT_ML_C_N<3..1>	TRUE	TRUE	NC_INT_ML_CN<3..1>	5	
64 12	NC_HDA_SDIN1	TRUE	TRUE	NC_HDA_SDIN1	12 64	
64 13	NC_PCI_PME_L	TRUE	TRUE	NC_PCI_PME_L	13 64	
64 14	NC_CLINK_CLK	TRUE	TRUE	NC_CLINK_CLK	14 64	
64 14	NC_CLINK_DATA	TRUE	TRUE	NC_CLINK_DATA	14 64	
64 14	NC_CLINK_RESET_L	TRUE	TRUE	NC_CLINK_RESET_L	14 64	
64 37	NC_SMC_SYS_LED	TRUE	TRUE	NC_SMC_SYS_LED	37 64	SMC
64	NC_IR_RX_OUT_RC	TRUE	TRUE	NC_IR_RX_OUT_RC	64	
64	NC_USB_SMCP	TRUE	TRUE	NC_USB_SMCP	64	
64	NC_USB_SMCN	TRUE	TRUE	NC_USB_SMCN	64	
64 37	NC_SMC_GFX_OVERTEMP	TRUE	TRUE	NC_SMC_GFX_OVERTEMP	37 64	
64 37	NC_SMC_GFX_THROTTLE_L	TRUE	TRUE	NC_SMC_GFX_THROTTLE_L	37 64	
64 37	NC_SMC_FAN_1_CTL	TRUE	TRUE	NC_SMC_FAN_1_CTL	37 64	
64 37	NC_SMC_FAN_1_TACH	TRUE	TRUE	NC_SMC_FAN_1_TACH	37 64	
64 37	NC_SMC_FAN_5_CTL	TRUE	TRUE	NC_SMC_FAN_5_CTL	37 64	
64	NC_ENET_ASF_GPIO	TRUE	TRUE	NC_ENET_ASF_GPIO	64	
64	NC_SMC_MPM5_LED_PWR	TRUE	TRUE	NC_SMC_MPM5_LED_PWR	64	
64	NC_SMC_MPM5_LED_CHG	TRUE	TRUE	NC_SMC_MPM5_LED_CHG	64	
64 37	NC_SMC_T25_EN_L	TRUE	TRUE	NC_SMC_T25_EN_L	37 64	
64 37	NC_SMC_DP_HPD_L	TRUE	TRUE	NC_SMC_DP_HPD_L	37 64	
64 37	NC_SMBUS_SMC_4_ASF_SCL	TRUE	TRUE	NC_SMBUS_SMC_4_ASF_SCL	37 64	
64 37	NC_SMBUS_SMC_4_ASF_SDA	TRUE	TRUE	NC_SMBUS_SMC_4_ASF_SDA	37 64	
64 37	NC_BDV_BKL_PWM	TRUE	TRUE	NC_BDV_BKL_PWM	37 64	
71	TBT_B_R2D_C_P<1..0>	TRUE	TRUE	NC_TBT_B_R2D_CP<1..0>	25	TBT
71	TBT_B_R2D_C_N<1..0>	TRUE	TRUE	NC_TBT_B_R2D_CN<1..0>	25	
71	TBT_B_D2R_P<1..0>	TRUE	TRUE	NC_TBT_B_D2RP<1..0>	25	
71	TBT_B_D2R_N<1..0>	TRUE	TRUE	NC_TBT_B_D2RN<1..0>	25	
64 25	NC_TBT_B_LSTX	TRUE	TRUE	NC_TBT_B_LSTX	25 64	
71 64	NC_DP_TBTPB_ML_CP<3..1:2>	TRUE	TRUE	NC_DP_TBTPB_ML_CP<3..1:2>	64 71	
71 64	NC_DP_TBTPB_ML_CN<3..1:2>	TRUE	TRUE	NC_DP_TBTPB_ML_CN<3..1:2>	64 71	
71 64 25	NC_DP_TBTPB_AUXCH_CP	TRUE	TRUE	NC_DP_TBTPB_AUXCH_CP	25 64 71	
71 64 25	NC_DP_TBTPB_AUXCH_CN	TRUE	TRUE	NC_DP_TBTPB_AUXCH_CN	25 64 71	
25	TP_DP_TBTSRC_ML_CP<3>	TRUE	TRUE	NC_DP_TBTSRC_ML_CP<3>		
25	TP_DP_TBTSRC_ML_CN<3>	TRUE	TRUE	NC_DP_TBTSRC_ML_CN<3>		
25	TP_DP_TBTSRC_ML_CP<2>	TRUE	TRUE	NC_DP_TBTSRC_ML_CP<2>		
25	TP_DP_TBTSRC_ML_CN<2>	TRUE	TRUE	NC_DP_TBTSRC_ML_CN<2>		
64 25	NC_DP_TBTSRC_ML_CP<1>	TRUE	TRUE	NC_DP_TBTSRC_ML_CP<1>	25 64	
64 25	NC_DP_TBTSRC_ML_CN<1>	TRUE	TRUE	NC_DP_TBTSRC_ML_CN<1>	25 64	
25	TP_DP_TBTSRC_ML_CP<0>	TRUE	TRUE	NC_DP_TBTSRC_ML_CP<0>		
25	TP_DP_TBTSRC_ML_CN<0>	TRUE	TRUE	NC_DP_TBTSRC_ML_CN<0>		
64 25	NC_DP_TBTSRC_AUXCH_CP	TRUE	TRUE	NC_DP_TBTSRC_AUXCH_CP	25 64	
64 25	NC_DP_TBTSRC_AUXCH_CN	TRUE	TRUE	NC_DP_TBTSRC_AUXCH_CN	25 64	

Unused nets with offpage

(Nets with offpages not used on this project)

HDD_PWR_EN	15
WOL_EN	14
BT_PWRRST_L	15
HDMITBTMUX_FLAG_L	15
FW_PWR_EN	15
FW_PME_L	15
ENET_MEDIA_SENSE	15
LCD_PSR_EN	15
LCD_IRQ_L	15
ODD_PWR_EN_L	13
ENET_LOW_PWR	13
AUD_IP_PERIPHERAL_DET	13
AUD_I2C_INT_L	13
AUD_IPHS_SWITCH_EN	13

SYNC_MASTER=J41_MLB SYNC_DATE=02/01/2013

PAGE TITLE: Func Test / No Test

Apple Inc.

DRAWING NUMBER: <SCH_NUM> SIZE: D

REVISION: <E4LABEL>

BRANCH: <BRANCH>

PAGE: 104 OF 121

SHEET: 64 OF 76

NOTICE OF PROPRIETARY PROPERTY:
THE INFORMATION CONTAINED HEREIN IS THE PROPRIETARY PROPERTY OF APPLE INC.
THE POSESSOR AGREES TO THE FOLLOWING:
I TO MAINTAIN THIS DOCUMENT IN CONFIDENCE
II NOT TO REPRODUCE OR COPY IT
III NOT TO REVEAL OR PUBLISH IT IN WHOLE OR PART
IV ALL RIGHTS RESERVED

WWW.AliSaler.Com

Functional Test Points

J9500: LIO Connector

FUNC_TEST		
TRUE	PP3V42_G3H	17 30 35 36 37 38 40 46 49 50 59 61 62 64
TRUE	PP3V3_S0	8 11 12 13 15 17 18 27 30 36 38 62 64 74
TRUE	PP1V5_S0SW_AUDIO	39 40 41 42 43 44 45 56 59 61
TRUE	SYS_ONEWIRE	58 61
TRUE	SMC_BC_ACOK	37 61
TRUE	USB_PWR_EN	37 38 50 61
TRUE	SMBUS_SMC_2_S3_SDA	35 59 61
TRUE	SMBUS_SMC_2_S3_SCL	37 40 61 73
TRUE	SPKRAMP_SHDN_L	37 40 61 73
TRUE	FINSTACKSNS_ALERT_L	47 61
TRUE	SPKRAMP_INR_N	39 61
TRUE	SPKRAMP_INR_P	47 61 74
TRUE	USB_EXTB_N	47 61 74
TRUE	USB_EXTB_P	14 61 68
TRUE	PP5V_S0_ALT_AUD_LDO_EN	14 61 68
TRUE	SMC_lID	61
TRUE	HDA_SDOUT	36 37 38 61 64
TRUE	HDA_BIT_CLK	12 61 69
TRUE	HDA_SDIN0	12 61 69
TRUE	XDP_USB_EXTB_OC_L	12 61 69
TRUE	HDA_RST_L	14 16 61
TRUE	HDA_SYNC	12 61 69
TRUE	USB3_EXTB_D2R_RC_P	12 61 69
TRUE	USB3_EXTB_D2R_RC_N	61 65 68
TRUE	USB3_EXTB_R2D_P	61 65 68
TRUE	USB3_EXTB_R2D_N	61 65 68
TRUE	AUD_PWR_EN	61 65 68
		13 59 61

(Need to add 5 GND TPs)

SD Card Aliases

		MAKE_BASE		
68 65 34 14	USB3_SD_D2R_P	TRUE	USB3_SD_D2R_P	14 34 65 68
68 65 34 14	USB3_SD_D2R_N	TRUE	USB3_SD_D2R_N	14 34 65 68
68 65 34 14	USB3_SD_R2D_C_P	TRUE	USB3_SD_R2D_C_P	14 34 65 68
68 65 34 14	USB3_SD_R2D_C_N	TRUE	USB3_SD_R2D_C_N	14 34 65 68
65 39 37 34 15	PP3V3_S0SW_SD		PP3V3_S0SW_SD	15 34 37 39 65

(MAKE_BASE=TRUE on page 45)

Bead Probes

68 61 14	USB3_EXTB_D2R_N	BEAD-PROBE	BPA511
68 61 14	USB3_EXTB_D2R_P	BEAD-PROBE	BPA510
68 65 61	USB3_EXTB_D2R_RC_N	BEAD-PROBE	BPA520
68 65 61	USB3_EXTB_D2R_RC_P	BEAD-PROBE	BPA521
68 61 14	USB3_EXTB_R2D_C_N	BEAD-PROBE	BPA513
68 61 14	USB3_EXTB_R2D_C_P	BEAD-PROBE	BPA512
68 65 61	USB3_EXTB_R2D_N	BEAD-PROBE	BPA523
68 65 61	USB3_EXTB_R2D_P	BEAD-PROBE	BPA522

SYNC_MASTER=J41_MLB SYNC_DATE=09/13/2012

PAGE TITLE: Project FCT/NC/Aliases

Apple Inc.

DRAWING NUMBER: <SCH_NUM> SIZE: D

REVISION: <E4LABEL>

BRANCH: <BRANCH>

PAGE: 105 OF 121

SHEET: 65 OF 76

NOTICE OF PROPRIETARY PROPERTY:
THE INFORMATION CONTAINED HEREIN IS THE PROPRIETARY PROPERTY OF APPLE INC.
THE POSESSOR AGREES TO THE FOLLOWING:
I TO MAINTAIN THIS DOCUMENT IN CONFIDENCE
II NOT TO REPRODUCE OR COPY IT
III NOT TO REVEAL OR PUBLISH IT IN WHOLE OR PART
IV ALL RIGHTS RESERVED

WWW.AliSaler.Com

J41/J43 Board-Specific Spacing & Physical Constraints

BOARD LAYERS	BOARD AREAS	BOARD UNITS (MIL or MM)	ALLEGRO VERSION
TOP,ISL2,ISL3,ISL4,ISL5,ISL6,ISL7,ISL8,ISL9,ISL10,ISL11,BOTTOM	NO_TYPE,BGA,MEM_TERM	MM	16.2

PHYSICAL_RULE_SET	LAYER	ALLOW ROUTE ON LAYER?	MINIMUM LINE WIDTH	MINIMUM NECK WIDTH	MAXIMUM NECK LENGTH	DIFFPAIR PRIMARY GAP	DIFFPAIR NECK GAP
DEFAULT	TOP,BOTTOM	Y	=50_OHM_SE	=50_OHM_SE			
DEFAULT	ISL2,ISL11	Y	=45_OHM_SE	=45_OHM_SE			
DEFAULT	ISL3,ISL10	Y	=45_OHM_SE	=45_OHM_SE			
DEFAULT	ISL4,ISL9	Y	=45_OHM_SE	=45_OHM_SE			
DEFAULT	*	N	100 MM	100 MM	10 MM	0 MM	0 MM
STANDARD	*	=DEFAULT	=DEFAULT	=DEFAULT	=DEFAULT	=DEFAULT	=DEFAULT

Single-ended Physical Constraints

PHYSICAL_RULE_SET	LAYER	ALLOW ROUTE ON LAYER?	MINIMUM LINE WIDTH	MINIMUM NECK WIDTH	MAXIMUM NECK LENGTH	DIFFPAIR PRIMARY GAP	DIFFPAIR NECK GAP
27P4_OHM_SE	TOP,BOTTOM	Y	0.310 MM	0.310 MM			
27P4_OHM_SE	ISL2,ISL11	Y	0.182 MM	0.182 MM			
27P4_OHM_SE	ISL3,ISL10	Y	0.182 MM	0.182 MM			
27P4_OHM_SE	ISL4,ISL9	Y	0.182 MM	0.182 MM			
27P4_OHM_SE	*	N	100 MM	100 MM	=STANDARD	=STANDARD	=STANDARD

PHYSICAL_RULE_SET	LAYER	ALLOW ROUTE ON LAYER?	MINIMUM LINE WIDTH	MINIMUM NECK WIDTH	MAXIMUM NECK LENGTH	DIFFPAIR PRIMARY GAP	DIFFPAIR NECK GAP
35_OHM_SE	TOP,BOTTOM	Y	0.195 MM	0.195 MM			
35_OHM_SE	ISL2,ISL11	Y	0.125 MM	0.125 MM			
35_OHM_SE	ISL3,ISL10	Y	0.125 MM	0.125 MM			
35_OHM_SE	ISL4,ISL9	Y	0.125 MM	0.125 MM			
35_OHM_SE	*	N	100 MM	100 MM	=STANDARD	=STANDARD	=STANDARD

PHYSICAL_RULE_SET	LAYER	ALLOW ROUTE ON LAYER?	MINIMUM LINE WIDTH	MINIMUM NECK WIDTH	MAXIMUM NECK LENGTH	DIFFPAIR PRIMARY GAP	DIFFPAIR NECK GAP
40_OHM_SE	TOP,BOTTOM	Y	0.170 MM	0.170 MM			
40_OHM_SE	ISL2,ISL11	Y	0.096 MM	0.096 MM			
40_OHM_SE	ISL3,ISL10	Y	0.096 MM	0.096 MM			
40_OHM_SE	ISL4,ISL9	Y	0.099 MM	0.099 MM			
40_OHM_SE	*	N	100 MM	100 MM	=STANDARD	=STANDARD	=STANDARD

PHYSICAL_RULE_SET	LAYER	ALLOW ROUTE ON LAYER?	MINIMUM LINE WIDTH	MINIMUM NECK WIDTH	MAXIMUM NECK LENGTH	DIFFPAIR PRIMARY GAP	DIFFPAIR NECK GAP
45_OHM_SE	TOP,BOTTOM	Y	0.135 MM	0.135 MM			
45_OHM_SE	ISL2,ISL11	Y	0.075 MM	0.075 MM			
45_OHM_SE	ISL3,ISL10	Y	0.075 MM	0.075 MM			
45_OHM_SE	ISL4,ISL9	Y	0.080 MM	0.080 MM			
45_OHM_SE	*	N	100 MM	100 MM	=STANDARD	=STANDARD	=STANDARD

PHYSICAL_RULE_SET	LAYER	ALLOW ROUTE ON LAYER?	MINIMUM LINE WIDTH	MINIMUM NECK WIDTH	MAXIMUM NECK LENGTH	DIFFPAIR PRIMARY GAP	DIFFPAIR NECK GAP
50_OHM_SE	TOP,BOTTOM	Y	0.110 MM	0.110 MM			
50_OHM_SE	*	N	100 MM	100 MM	=STANDARD	=STANDARD	=STANDARD

PHYSICAL_RULE_SET	LAYER	ALLOW ROUTE ON LAYER?	MINIMUM LINE WIDTH	MINIMUM NECK WIDTH	MAXIMUM NECK LENGTH	DIFFPAIR PRIMARY GAP	DIFFPAIR NECK GAP
55_OHM_SE	TOP,BOTTOM	Y	0.090 MM	0.090 MM			
55_OHM_SE	*	N	100 MM	100 MM	=STANDARD	=STANDARD	=STANDARD

Differential Pair Physical Constraints

PHYSICAL_RULE_SET	LAYER	ALLOW ROUTE ON LAYER?	MINIMUM LINE WIDTH	MINIMUM NECK WIDTH	MAXIMUM NECK LENGTH	DIFFPAIR PRIMARY GAP	DIFFPAIR NECK GAP
70_OHM_DIFF	TOP,BOTTOM	Y	0.165 MM	0.165 MM		0.110 MM	0.110 MM
70_OHM_DIFF	ISL2,ISL11	Y	0.105 MM	0.105 MM		0.100 MM	0.100 MM
70_OHM_DIFF	ISL3,ISL10	Y	0.105 MM	0.105 MM		0.100 MM	0.100 MM
70_OHM_DIFF	ISL4,ISL9	Y	0.110 MM	0.110MM		0.095 MM	0.095 MM
70_OHM_DIFF	*	N	100 MM	100 MM	=STANDARD	=STANDARD	=STANDARD

PHYSICAL_RULE_SET	LAYER	ALLOW ROUTE ON LAYER?	MINIMUM LINE WIDTH	MINIMUM NECK WIDTH	MAXIMUM NECK LENGTH	DIFFPAIR PRIMARY GAP	DIFFPAIR NECK GAP
80_OHM_DIFF	TOP,BOTTOM	Y	0.132 MM	0.132 MM		0.130 MM	0.130 MM
80_OHM_DIFF	ISL2,ISL11	Y	0.081 MM	0.081 MM		0.115 MM	0.115 MM
80_OHM_DIFF	ISL3,ISL10	Y	0.081 MM	0.081 MM		0.115 MM	0.115 MM
80_OHM_DIFF	ISL4,ISL9	Y	0.088 MM	0.088 MM		0.110 MM	0.110 MM
80_OHM_DIFF	*	N	100 MM	100 MM	=STANDARD	=STANDARD	=STANDARD

PHYSICAL_RULE_SET	LAYER	ALLOW ROUTE ON LAYER?	MINIMUM LINE WIDTH	MINIMUM NECK WIDTH	MAXIMUM NECK LENGTH	DIFFPAIR PRIMARY GAP	DIFFPAIR NECK GAP
90_OHM_DIFF	TOP,BOTTOM	Y	0.115 MM	0.115 MM		0.200 MM	0.200 MM
90_OHM_DIFF	ISL2,ISL11	Y	0.070 MM	0.070 MM		0.180 MM	0.180 MM
90_OHM_DIFF	ISL3,ISL10	Y	0.070 MM	0.070 MM		0.180 MM	0.180 MM
90_OHM_DIFF	ISL4,ISL9	Y	0.076 MM	0.076 MM		0.180 MM	0.180 MM
90_OHM_DIFF	*	N	100 MM	100 MM	=STANDARD	=STANDARD	=STANDARD

Spacing Constraints

SPACING_RULE_SET	LAYER	LINE-TO-LINE SPACING	WEIGHT
1:1_SPACING	*	0.100 MM	?

SPACING_RULE_SET	LAYER	LINE-TO-LINE SPACING	WEIGHT
1x_DIELECTRIC	TOP,BOTTOM	0.071 MM	?
1x_DIELECTRIC	ISL3,ISL10	0.053 MM	?
1x_DIELECTRIC	ISL4,ISL9	0.050 MM	?
1x_DIELECTRIC	*	0.090 MM	?

SPACING_RULE_SET	LAYER	LINE-TO-LINE SPACING	WEIGHT
DEFAULT	*	0.1 MM	?
STANDARD	*	=DEFAULT	?
BGA_P075MM	*	0.075 MM	?

NET_SPACING_TYPE1	NET_SPACING_TYPE2	AREA_TYPE	SPACING_RULE_SET
*	*	BGA	BGA_P075MM

NET_PHYSICAL_TYPE	AREA_TYPE	PHYSICAL_RULE_SET
*	BGA	P070MM_BGA

PHYSICAL_RULE_SET	LAYER	ALLOW ROUTE ON LAYER?	MINIMUM LINE WIDTH	MINIMUM NECK WIDTH	MAXIMUM NECK LENGTH	DIFFPAIR PRIMARY GAP	DIFFPAIR NECK GAP
P070MM_BGA	*			0.070 MM	5 MM		0.075 MM

PHYSICAL_RULE_SET	LAYER	ALLOW ROUTE ON LAYER?	MINIMUM LINE WIDTH	MINIMUM NECK WIDTH	MAXIMUM NECK LENGTH	DIFFPAIR PRIMARY GAP	DIFFPAIR NECK GAP
73_OHM_DIFF	TOP,BOTTOM	Y	0.165 MM	0.165 MM		0.150 MM	0.150 MM
73_OHM_DIFF	ISL2,ISL11	Y	0.106 MM	0.106 MM		0.150 MM	0.150 MM
73_OHM_DIFF	ISL3,ISL10	Y	0.106 MM	0.106 MM		0.150 MM	0.150 MM
73_OHM_DIFF	ISL4,ISL9	Y	0.110 MM	0.110 MM		0.150 MM	0.150 MM
73_OHM_DIFF	*	N	100 MM	100 MM	=STANDARD	=STANDARD	=STANDARD

PHYSICAL_RULE_SET	LAYER	ALLOW ROUTE ON LAYER?	MINIMUM LINE WIDTH	MINIMUM NECK WIDTH	MAXIMUM NECK LENGTH	DIFFPAIR PRIMARY GAP	DIFFPAIR NECK GAP
85_OHM_DIFF	TOP,BOTTOM	Y	0.120 MM	0.120 MM		0.150 MM	0.150 MM
85_OHM_DIFF	ISL2,ISL11	Y	0.078 MM	0.078 MM		0.160 MM	0.160 MM
85_OHM_DIFF	ISL3,ISL10	Y	0.078 MM	0.078 MM		0.160 MM	0.160 MM
85_OHM_DIFF	ISL4,ISL9	Y	0.082 MM	0.082 MM		0.140 MM	0.140 MM
85_OHM_DIFF	*	N	100 MM	100 MM	=STANDARD	=STANDARD	=STANDARD

SYNC_MASTER=CONSTRAINTS SYNC_DATE=10/24/2012

PAGE TITLE
PCB Rule Definitions

Apple Inc.

DRAWING NUMBER <SCH_NUM> SIZE D
REVISION <E4LABEL>
BRANCH <BRANCH>
PAGE 110 OF 121
SHEET 66 OF 76

NOTICE OF PROPRIETARY PROPERTY:
THE INFORMATION CONTAINED HEREIN IS THE PROPRIETARY PROPERTY OF APPLE INC.
THE POSESSOR AGREES TO THE FOLLOWING:
I TO MAINTAIN THIS DOCUMENT IN CONFIDENCE
II NOT TO REPRODUCE OR COPY IT
III NOT TO REVEAL OR PUBLISH IT IN WHOLE OR PART
IV ALL RIGHTS RESERVED

WWW.AliSaler.Com

CPU Signal Constraints

PHYSICAL_RULE_SET	LAYER	ALLOW ROUTE ON LAYER?	MINIMUM LINE WIDTH	MINIMUM NECK WIDTH	MAXIMUM NECK LENGTH	DIFFPAIR PRIMARY GAP	DIFFPAIR NECK GAP
CPU_45S	*	=45_OHM_SE	=45_OHM_SE	=45_OHM_SE	=45_OHM_SE	=STANDARD	=STANDARD
CPU_27P4S	*	=27P4_OHM_SE	=27P4_OHM_SE	=27P4_OHM_SE	=27P4_OHM_SE	0.100 MM	0.100 MM

SPACING_RULE_SET	LAYER	LINE-TO-LINE SPACING	WEIGHT
CPU_AGTL	TOP,BOTTOM	=2x_DIELECTRIC	?
CPU_AGTL	*	=STANDARD	?

Note: CPU_8MIL and CPU_ITP can be converted back to TABLE_SPACING_RULE once rdar://10308147 is resolved

NET_SPACING_TYPE1	NET_SPACING_TYPE2	AREA_TYPE	SPACING_RULE_SET
CPU_8MIL	*	*	CPU_8MIL_2ANY

SPACING_RULE_SET	LAYER	LINE-TO-LINE SPACING	WEIGHT
CPU_8MIL_2ANY	*	8 MIL	?

NET_SPACING_TYPE1	NET_SPACING_TYPE2	AREA_TYPE	SPACING_RULE_SET
CPU_ITP	*	*	CPU_ITP_2ANY

SPACING_RULE_SET	LAYER	LINE-TO-LINE SPACING	WEIGHT
CPU_ITP_2ANY	*	=4x_DIELECTRIC	?

NET_SPACING_TYPE1	NET_SPACING_TYPE2	AREA_TYPE	SPACING_RULE_SET
CPU_COMP	CPU_COMP	*	CPU_COMP_2SELF
CPU_COMP	*	*	CPU_COMP_2OTHER

SPACING_RULE_SET	LAYER	LINE-TO-LINE SPACING	WEIGHT
CPU_COMP_2SELF	TOP,BOTTOM	=6x_DIELECTRIC	?
CPU_COMP_2OTHER	TOP,BOTTOM	=10x_DIELECTRIC	?

SPACING_RULE_SET	LAYER	LINE-TO-LINE SPACING	WEIGHT
CPU_COMP_2SELF	*	=4x_DIELECTRIC	?
CPU_COMP_2OTHER	*	=6x_DIELECTRIC	?

NET_SPACING_TYPE1	NET_SPACING_TYPE2	AREA_TYPE	SPACING_RULE_SET
CPU_VCCSENSE	CPU_VCCSENSE	*	CPU_VCCSENSE_2SELF
CPU_VCCSENSE	*	*	CPU_VCCSENSE_2OTHER

SPACING_RULE_SET	LAYER	LINE-TO-LINE SPACING	WEIGHT
CPU_VCCSENSE_2SELF	TOP,BOTTOM	=6x_DIELECTRIC	?
CPU_VCCSENSE_2OTHER	TOP,BOTTOM	=10x_DIELECTRIC	?

SPACING_RULE_SET	LAYER	LINE-TO-LINE SPACING	WEIGHT
CPU_VCCSENSE_2SELF	*	=4x_DIELECTRIC	?
CPU_VCCSENSE_2OTHER	*	=6x_DIELECTRIC	?

PCI-Express Interface Constraints

PHYSICAL_RULE_SET	LAYER	ALLOW ROUTE ON LAYER?	MINIMUM LINE WIDTH	MINIMUM NECK WIDTH	MAXIMUM NECK LENGTH	DIFFPAIR PRIMARY GAP	DIFFPAIR NECK GAP
PCIE_80D	*	=80_OHM_DIFF	=80_OHM_DIFF	=80_OHM_DIFF	=80_OHM_DIFF	=80_OHM_DIFF	=80_OHM_DIFF
CLK_PCIE_80D	*	=80_OHM_DIFF	=80_OHM_DIFF	=80_OHM_DIFF	=80_OHM_DIFF	=80_OHM_DIFF	=80_OHM_DIFF

PCIE Clock Spacing

NET_SPACING_TYPE1	NET_SPACING_TYPE2	AREA_TYPE	SPACING_RULE_SET
CLK_PCIE	CLK_PCIE	*	CLK_PCIE_2SELF
CLK_PCIE	*	*	CLK_PCIE_2OTHER

SPACING_RULE_SET	LAYER	LINE-TO-LINE SPACING	WEIGHT
CLK_PCIE_2SELF	TOP,BOTTOM	=6x_DIELECTRIC	?
CLK_PCIE_2OTHER	TOP,BOTTOM	=10x_DIELECTRIC	?

SPACING_RULE_SET	LAYER	LINE-TO-LINE SPACING	WEIGHT
CLK_PCIE_2SELF	*	=4x_DIELECTRIC	?
CLK_PCIE_2OTHER	*	=6x_DIELECTRIC	?

CPU PCIE Spacing

NET_SPACING_TYPE1	NET_SPACING_TYPE2	AREA_TYPE	SPACING_RULE_SET
PCIE_CPU_TX	PCIE_CPU_TX	*	PCIE_TX2TX
PCIE_CPU_RX	PCIE_CPU_RX	*	PCIE_RX2RX
PCIE_CPU_TX	*_CPU_TX	*	PCIE_TX2OTHERTX
PCIE_CPU_RX	*_CPU_RX	*	PCIE_RX2OTHERRX
PCIE_CPU_TX	*_CPU_RX	*	PCIE_TX2RX
PCIE_CPU_RX	*_CPU_TX	*	PCIE_RX2TX
PCIE_CPU_TX	*_TX	*	PCIE_2OTHERHS
PCIE_CPU_RX	*_TX	*	PCIE_2OTHERHS
PCIE_CPU_TX	*_RX	*	PCIE_2OTHERHS
PCIE_CPU_RX	*_RX	*	PCIE_2OTHERHS
PCIE_CPU_TX	*	*	PCIE_2OTHER
PCIE_CPU_RX	*	*	PCIE_2OTHER

SPACING_RULE_SET	LAYER	LINE-TO-LINE SPACING	WEIGHT
PCIE_TX2TX	TOP,BOTTOM	=5x_DIELECTRIC	?
PCIE_RX2RX	TOP,BOTTOM	=5x_DIELECTRIC	?
PCIE_TX2OTHERTX	TOP,BOTTOM	=5x_DIELECTRIC	?
PCIE_RX2OTHERRX	TOP,BOTTOM	=5x_DIELECTRIC	?
PCIE_TX2RX	TOP,BOTTOM	=7x_DIELECTRIC	?
PCIE_RX2TX	TOP,BOTTOM	=7x_DIELECTRIC	?
PCIE_2OTHERHS	TOP,BOTTOM	=6x_DIELECTRIC	?
PCIE_2OTHER	TOP,BOTTOM	=5x_DIELECTRIC	?

SPACING_RULE_SET	LAYER	LINE-TO-LINE SPACING	WEIGHT
PCIE_TX2TX	*	=2.5x_DIELECTRIC	?
PCIE_RX2RX	*	=2.5x_DIELECTRIC	?
PCIE_TX2OTHERTX	*	=4x_DIELECTRIC	?
PCIE_RX2OTHERRX	*	=4x_DIELECTRIC	?
PCIE_TX2RX	*	=6x_DIELECTRIC	?
PCIE_RX2TX	*	=6x_DIELECTRIC	?
PCIE_2OTHERHS	*	=4x_DIELECTRIC	?
PCIE_2OTHER	*	=3x_DIELECTRIC	?

PCH PCIE Spacing

NET_SPACING_TYPE1	NET_SPACING_TYPE2	AREA_TYPE	SPACING_RULE_SET
PCIE_PCH_TX	PCIE_PCH_TX	*	PCIE_TX2TX
PCIE_PCH_RX	PCIE_PCH_RX	*	PCIE_RX2RX
PCIE_PCH_TX	*_PCH_TX	*	PCIE_TX2OTHERTX
PCIE_PCH_RX	*_PCH_RX	*	PCIE_RX2OTHERRX
PCIE_PCH_TX	*_PCH_RX	*	PCIE_TX2RX
PCIE_PCH_RX	*_PCH_TX	*	PCIE_RX2TX
PCIE_PCH_TX	*_TX	*	PCIE_2OTHERHS
PCIE_PCH_RX	*_TX	*	PCIE_2OTHERHS
PCIE_PCH_TX	*_RX	*	PCIE_2OTHERHS
PCIE_PCH_RX	*_RX	*	PCIE_2OTHERHS
PCIE_PCH_TX	*	*	PCIE_2OTHER
PCIE_PCH_RX	*	*	PCIE_2OTHER

SOURCE: 471984_Chief_River_MS_PDG_1.0 and the spacing rule is adjusted per SI team feedback.

Note: DisplayPort tables are on Page 113

CPU Net Properties

ELECTRICAL_CONSTRAINT_SET	NET_TYPE PHYSICAL	NET_TYPE SPACING		
CPU_PECI	CPU_45S	CPU_COMP	CPU_PECI	6 38
PM_SYNC	CPU_45S	CPU_AGTL	PM_SYNC	
PM_MEM_PWRGD	CPU_45S	CPU_AGTL	PM_MEM_PWRGD	
	CPU_45S	CPU_TTP	XDP_DBRESET_L	16 17
	CPU_45S	CPU_TTP	XDP_CPU_PRDY_L	6 16 64
	CPU_45S	CPU_TTP	XDP_CPU_PREQ_L	6 16 64
	CPU_27P4S	CPU_COMP	EDP_COMP	
	CPU_27P4S	CPU_COMP	CPU_PEG_COMP	
CPU_SM_RCOMP	CPU_27P4S	CPU_COMP	CPU_SM_RCOMP<0>	6
CPU_SM_RCOMP	CPU_27P4S	CPU_COMP	CPU_SM_RCOMP<1>	6
CPU_SM_RCOMP	CPU_27P4S	CPU_COMP	CPU_SM_RCOMP<2>	6
	CPU_45S	CPU_TTP	CPU_CFG<11..0>	6 16 64
CPU_CATERR_L	CPU_45S	CPU_AGTL	CPU_CATERR_L	6 37
	CPU_45S	CPU_AGTL	CPU_VCCIO_SEL	
CPU_PROCHOT_L	CPU_45S	CPU_AGTL	CPU_PROCHOT_L	6 37 38 51
CPU_PWRGD	CPU_45S	CPU_AGTL	CPU_PWRGD	6
PM_THRMTRIP_L	CPU_45S	CPU_8MIL	PM_THRMTRIP_L	15 38
DMI_CLK100M	CLK_PCIE_80D	CLK_PCIE	DMI_CLK100M_CPU_P	
DMI_CLK100M	CLK_PCIE_80D	CLK_PCIE	DMI_CLK100M_CPU_N	
DPLL_REF_CLK120M	CLK_PCIE_80D	CLK_PCIE	DPLL_REF_CLKP	
DPLL_REF_CLK120M	CLK_PCIE_80D	CLK_PCIE	DPLL_REF_CLKN	
ITPCPU_CLK100M	CLK_PCIE_80D	CLK_PCIE	ITPCPU_CLK100M_P	
ITPCPU_CLK100M	CLK_PCIE_80D	CLK_PCIE	ITPCPU_CLK100M_N	
ITPCPU_CLK100M	CLK_PCIE_80D	CLK_PCIE	ITPXDP_CLK100M_P	
ITPCPU_CLK100M	CLK_PCIE_80D	CLK_PCIE	ITPXDP_CLK100M_N	
ITPCPU_CLK100M	CLK_PCIE_80D	CLK_PCIE	XDP_CPU_CLK100M_P	
ITPCPU_CLK100M	CLK_PCIE_80D	CLK_PCIE	XDP_CPU_CLK100M_N	
XDP_TDI	CPU_45S	CPU_TTP	XDP_CPU_TDI	6 16 64
XDP_TDO	CPU_45S	CPU_TTP	XDP_CPU_TDO	6 16 64
XDP_TMS	CPU_45S	CPU_TTP	XDP_CPU_TMS	6 16 64
XDP_TCK	CPU_45S	CPU_TTP	XDP_CPU_TCK	6 16 64
XDP_TRST_L	CPU_45S	CPU_TTP	XDP_CPUPCH_TRST_L	6 12 16 64
XDP_BPM_L	CPU_45S	CPU_TTP	XDP_BPM_L<1..0>	6 16
	CPU_45S	CPU_TTP	XDP_BPM_L<7..2>	6 16
	CPU_45S	CPU_TTP	XDP_OBSDATA_B<3..0>	
	CPU_45S	CPU_TTP	CPU_CFG<15..12>	6 16
(FSB_CPURST_L)	CPU_45S	CPU_TTP	XDP_CPURST_L	16
CPU_VCCSENSE	SENSE_1T01_P2MM	CPU_VCCSENSE	CPU_VCCSENSE_P	8 51
CPU_VCCSENSE	SENSE_1T01_P2MM	CPU_VCCSENSE	CPU_VCCSENSE_N	9 51
CPU_VCCIOSENSE	SENSE_1T01_P2MM	CPU_VCCSENSE	CPU_VCCIOSENSE_P	
CPU_VCCIOSENSE	SENSE_1T01_P2MM	CPU_VCCSENSE	CPU_VCCIOSENSE_N	
CPU_AXG_SENSE	SENSE_1T01_P2MM	CPU_VCCSENSE	CPU_AXG_SENSE_P	
CPU_AXG_SENSE	SENSE_1T01_P2MM	CPU_VCCSENSE	CPU_AXG_SENSE_N	
CPU_VALSENSE	CPU_27P4S	CPU_VCCSENSE	CPU_VDDQ_SENSE_P	
CPU_VALSENSE	CPU_27P4S	CPU_VCCSENSE	CPU_VDDQ_SENSE_N	
CPU_VALSENSE	CPU_27P4S	CPU_VCCSENSE	CPU_AXG_VALSENSE_P	
CPU_VALSENSE	CPU_27P4S	CPU_VCCSENSE	CPU_AXG_VALSENSE_N	
CPU_VALSENSE	CPU_27P4S	CPU_VCCSENSE	CPU_VCC_VALSENSE_P	
CPU_VALSENSE	CPU_27P4S	CPU_VCCSENSE	CPU_VCC_VALSENSE_N	
CPU_SVIDALERT_L	CPU_45S	CPU_COMP	CPU_VIDALERT_L	8 51
CPU_SVIDSCLK	CPU_45S	CPU_COMP	CPU_VIDSCLK	8 51
CPU_SVIDSOUT	CPU_45S	CPU_COMP	CPU_VIDSOUT	8 51
PCIE_CPU_SSD_R2D	PCIE_80D	PCIE_CPU_TX	PCIE_SSD_R2D_C_P<3..0>	12 30
PCIE_CPU_SSD_R2D	PCIE_80D	PCIE_CPU_TX	PCIE_SSD_R2D_C_N<3..0>	12 30
	PCIE_80D	PCIE_CPU_TX	PCIE_SSD_R2D_P<3..0>	30 64
	PCIE_80D	PCIE_CPU_TX	PCIE_SSD_R2D_N<3..0>	30 64
	PCIE_80D	PCIE_CPU_RX	PCIE_SSD_D2R_C_P<3..0>	
	PCIE_80D	PCIE_CPU_RX	PCIE_SSD_D2R_C_N<3..0>	
PCIE_CPU_SSD_D2R	PCIE_80D	PCIE_CPU_RX	PCIE_SSD_D2R_P<3..0>	12 30 64
PCIE_CPU_SSD_D2R	PCIE_80D	PCIE_CPU_RX	PCIE_SSD_D2R_N<3..0>	12 30 64
PCIE_CLK100M_SSD	CLK_PCIE_80D	CLK_PCIE	PCIE_CLK100M_SSD_P	12 30 64
PCIE_CLK100M_SSD	CLK_PCIE_80D	CLK_PCIE	PCIE_CLK100M_SSD_N	12 30 64
DP_TBT_ML	DP_80D	DP_TX	DP_TBTSNK0_ML_P<3..0>	25
DP_TBT_ML	DP_80D	DP_TX	DP_TBTSNK0_ML_N<3..0>	25
	DP_80D	DP_TX	DP_TBTSNK0_ML_C_P<3..0>	5 25
	DP_80D	DP_TX	DP_TBTSNK0_ML_C_N<3..0>	5 25
DP_TBT_AUXCH	DP_80D	DP_AUX	DP_TBTSNK0_AUXCH_P	25
DP_TBT_AUXCH	DP_80D	DP_AUX	DP_TBTSNK0_AUXCH_N	25
	DP_80D	DP_AUX	DP_TBTSNK0_AUXCH_C_P	13 25
	DP_80D	DP_AUX	DP_TBTSNK0_AUXCH_C_N	13 25
DP_TBT_ML	DP_80D	DP_TX	DP_TBTSNK1_ML_P<3..0>	25
DP_TBT_ML	DP_80D	DP_TX	DP_TBTSNK1_ML_N<3..0>	25
	DP_80D	DP_TX	DP_TBTSNK1_ML_C_P<3..0>	5 18 25
	DP_80D	DP_TX	DP_TBTSNK1_ML_C_N<3..0>	5 18 25
DP_TBT_AUXCH	DP_80D	DP_AUX	DP_TBTSNK1_AUXCH_P	25
DP_TBT_AUXCH	DP_80D	DP_AUX	DP_TBTSNK1_AUXCH_N	25
	DP_80D	DP_AUX	DP_TBTSNK1_AUXCH_C_P	13 18 25
	DP_80D	DP_AUX	DP_TBTSNK1_AUXCH_C_N	13 18 25
DP_INT_ML	DP_80D	DP_TX	DP_INT_ML_P<3..0>	60 64
DP_INT_ML	DP_80D	DP_TX	DP_INT_ML_N<3..0>	60 64
	DP_80D	DP_TX	DP_INT_ML_C_P<3..0>	5 60 64
	DP_80D	DP_TX	DP_INT_ML_C_N<3..0>	5 60 64
DP_INT_AUXCH	DP_80D	DP_AUX	DP_INT_AUX_CH_C_P	60 64
DP_INT_AUXCH	DP_80D	DP_AUX	DP_INT_AUX_CH_C_N	60 64
DP_INT_AUXCH	DP_80D	DP_AUX	DP_INT_AUXCH_C_P	5 60
DP_INT_AUXCH	DP_80D	DP_AUX	DP_INT_AUXCH_C_N	5 60
	DP_80D	DP_AUX	DP_INT_AUXCH_P	
	DP_80D	DP_AUX	DP_INT_AUXCH_N	

PCIe SSD

DP

SYNC_MASTER=CONSTRAINTS SYNC_DATE=09/25/2012

PAGE TITLE: CPU Constraints

Apple Inc.

DRAWING NUMBER: <SCH_NUM> SIZE: D

REVISION: <E4LABEL>

BRANCH: <BRANCH>

PAGE: 111 OF 121

SHEET: 67 OF 76

NOTICE OF PROPRIETARY PROPERTY:
THE INFORMATION CONTAINED HEREIN IS THE PROPRIETARY PROPERTY OF APPLE INC.
THE POSESSOR AGREES TO THE FOLLOWING:
I TO MAINTAIN THIS DOCUMENT IN CONFIDENCE
II NOT TO REPRODUCE OR COPY IT
III NOT TO REVEAL OR PUBLISH IT IN WHOLE OR PART
IV ALL RIGHTS RESERVED

WWW.AliSaler.Com

SATA Interface Constraints

PHYSICAL_RULE_SET	LAYER	ALLOW ROUTE ON LAYER?	MINIMUM LINE WIDTH	MINIMUM NECK WIDTH	MAXIMUM NECK LENGTH	DIFFPAIR PRIMARY GAP	DIFFPAIR NECK GAP
SATA_80D	*	=80_OHM_DIFF	=80_OHM_DIFF	=80_OHM_DIFF	=80_OHM_DIFF	=80_OHM_DIFF	=80_OHM_DIFF

SPACING_RULE_SET	LAYER	LINE-TO-LINE SPACING	WEIGHT
SATA_ICOMP	*	=4x_DIELECTRIC	?

SOURCE: 471984_Chief_River_MS_PDG_1.0 and the spacing rule is adjusted per SI team feedback.

UART Interface Constraints

PHYSICAL_RULE_SET	LAYER	ALLOW ROUTE ON LAYER?	MINIMUM LINE WIDTH	MINIMUM NECK WIDTH	MAXIMUM NECK LENGTH	DIFFPAIR PRIMARY GAP	DIFFPAIR NECK GAP
UART_45S	*	=45_OHM_SE	=45_OHM_SE	=45_OHM_SE	=45_OHM_SE	=45_OHM_SE	=45_OHM_SE

SPACING_RULE_SET	LAYER	LINE-TO-LINE SPACING	WEIGHT
UART	*	=2x_DIELECTRIC	?

USB 2.0 Interface Constraints

PHYSICAL_RULE_SET	LAYER	ALLOW ROUTE ON LAYER?	MINIMUM LINE WIDTH	MINIMUM NECK WIDTH	MAXIMUM NECK LENGTH	DIFFPAIR PRIMARY GAP	DIFFPAIR NECK GAP
PCH_USB_RBIAS	*	=STANDARD	8 MIL	8 MIL	=STANDARD	=STANDARD	=STANDARD
USB_80D	*	=80_OHM_DIFF	=80_OHM_DIFF	=80_OHM_DIFF	=80_OHM_DIFF	=80_OHM_DIFF	=80_OHM_DIFF

SPACING_RULE_SET	LAYER	LINE-TO-LINE SPACING	WEIGHT
USB	*	=2x_DIELECTRIC	?

SPACING_RULE_SET	LAYER	LINE-TO-LINE SPACING	WEIGHT
USB	TOP,BOTTOM	=4x_DIELECTRIC	?

SOURCE: Calpella Platform Design Guide for Ibex Peak M (DG-398905-398905_v1.5), Section 3.8

USB 3.0 Interface Constraints

NET_SPACING_TYPE1	NET_SPACING_TYPE2	AREA_TYPE	SPACING_RULE_SET
USB3_PCH_TX	USB3_PCH_TX	*	USB3_TX2TX
USB3_PCH_RX	USB3_PCH_RX	*	USB3_RX2RX
USB3_PCH_TX	*_PCH_TX	*	USB3_TX2OTHERTX
USB3_PCH_RX	*_PCH_RX	*	USB3_RX2OTHERRX
USB3_PCH_TX	*_PCH_RX	*	USB3_TX2RX
USB3_PCH_RX	*_PCH_TX	*	USB3_RX2TX
USB3_PCH_TX	*_TX	*	USB3_2OTHERHS
USB3_PCH_RX	*_TX	*	USB3_2OTHERHS
USB3_PCH_TX	*_RX	*	USB3_2OTHERHS
USB3_PCH_RX	*_RX	*	USB3_2OTHERHS
USB3_PCH_TX	*	*	USB3_2OTHER
USB3_PCH_RX	*	*	USB3_2OTHER

SPACING_RULE_SET	LAYER	LINE-TO-LINE SPACING	WEIGHT
USB3_TX2TX	TOP,BOTTOM	=5x_DIELECTRIC	?
USB3_RX2RX	TOP,BOTTOM	=5x_DIELECTRIC	?
USB3_TX2OTHERTX	TOP,BOTTOM	=5x_DIELECTRIC	?
USB3_RX2OTHERRX	TOP,BOTTOM	=5x_DIELECTRIC	?
USB3_TX2RX	TOP,BOTTOM	=7x_DIELECTRIC	?
USB3_RX2TX	TOP,BOTTOM	=7x_DIELECTRIC	?
USB3_2OTHERHS	TOP,BOTTOM	=6x_DIELECTRIC	?
USB3_2OTHER	TOP,BOTTOM	=5x_DIELECTRIC	?

SPACING_RULE_SET	LAYER	LINE-TO-LINE SPACING	WEIGHT
USB3_TX2TX	*	=2.5x_DIELECTRIC	?
USB3_RX2RX	*	=2.5x_DIELECTRIC	?
USB3_TX2OTHERTX	*	=4x_DIELECTRIC	?
USB3_RX2OTHERRX	*	=4x_DIELECTRIC	?
USB3_TX2RX	*	=6x_DIELECTRIC	?
USB3_RX2TX	*	=6x_DIELECTRIC	?
USB3_2OTHERHS	*	=4x_DIELECTRIC	?
USB3_2OTHER	*	=3x_DIELECTRIC	?

SOURCE: 471984_Cheif_River_MS_PDG_1.0 and the spacing rule is adjusted per SI team feedback.

PCH Net Properties

ELECTRICAL_CONSTRAINT_SET	NET_TYPE PHYSICAL	NET_TYPE SPACING			
PCH_SATA_ICOMP		SATA_ICOMP	PCH_SATAICOMP		
USB_HUB1_UP	USB_80D	USB	USB_HUB_UP_P		USB Hucopyb nets
USB_HUB1_UP	USB_80D	USB	USB_HUB_UP_N		
USB_BT	USB_80D	USB	USB_BT_P	14 29	
USB_BT	USB_80D	USB	USB_BT_N	14 29	
	USB_80D	USB	USB_BT_CONN_P	29 64	
	USB_80D	USB	USB_BT_CONN_N	29 64	
	USB_80D	USB	USB_BT_WAKE_P		
	USB_80D	USB	USB_BT_WAKE_N		
USB_TPAD	USB_80D	USB	USB_TPAD_P	14 36 64	
USB_TPAD	USB_80D	USB	USB_TPAD_N	14 36 64	
	USB_80D	USB	USB_TPAD_CONN_P		
	USB_80D	USB	USB_TPAD_CONN_N		
	USB_80D	USB	TPAD_SPI_MOSI_USB_P		
	USB_80D	USB	TPAD_SPI_MISO_USB_N		
USB_TPAD_M	USB_80D	USB	USB_TPAD_M_P		
USB_TPAD_M	USB_80D	USB	USB_TPAD_M_N		
USB_SDCARD	USB_80D	USB	USB_SDCARD_P		
USB_SDCARD	USB_80D	USB	USB_SDCARD_N		
	SPI_45S	SPI	TPAD_SPI_MOSI	15 36	TP SPI nets
	SPI_45S	SPI	TPAD_SPI_MISO	15 36	
	SPI_45S	SPI	TPAD_SPI_CLK	15 36	
USB_EXTA	USB_80D	USB	USB_EXTA_P	14 35	USB EXTA nets (Right USB port)
USB_EXTA	USB_80D	USB	USB_EXTA_N	14 35	
	UART_45S	UART	SMC_DEBUGPRT_TX_L	35 37 38	
	UART_45S	UART	SMC_DEBUGPRT_RX_L	35 37 38	
USB2_EXTA	USB_80D	USB	USB2_EXTA_MUXED_P	35	
USB2_EXTA	USB_80D	USB	USB2_EXTA_MUXED_N	35	
USB2_EXTA	USB_80D	USB	USB2_EXTA_MUXED_F_P	35	
USB2_EXTA	USB_80D	USB	USB2_EXTA_MUXED_F_N	35	
USB3_EXTA_RX	USB_80D	USB3_PCH_RX	USB3_EXTA_D2R_P	14 35	
USB3_EXTA_RX	USB_80D	USB3_PCH_RX	USB3_EXTA_D2R_N	14 35	
USB3_EXTA_TX	USB_80D	USB3_PCH_TX	USB3_EXTA_R2D_P	35	
USB3_EXTA_TX	USB_80D	USB3_PCH_TX	USB3_EXTA_R2D_N	35	
	USB_80D	USB3_PCH_RX	USB3_EXTA_D2R_F_P		
	USB_80D	USB3_PCH_RX	USB3_EXTA_D2R_F_N		
	USB_80D	USB3_PCH_TX	USB3_EXTA_R2D_F_P		
	USB_80D	USB3_PCH_TX	USB3_EXTA_R2D_F_N		
	USB_80D	USB3_PCH_TX	USB3_EXTA_R2D_C_P	14 35	
	USB_80D	USB3_PCH_TX	USB3_EXTA_R2D_C_N	14 35	
USB_EXTB	USB_80D	USB	USB_EXTB_P	14 61 65	USB EXTB nets (Left USB port)
USB_EXTB	USB_80D	USB	USB_EXTB_N	14 61 65	
USB3_EXTB_RX	USB_80D	USB3_PCH_RX	USB3_EXTB_D2R_P	14 61 65	
USB3_EXTB_RX	USB_80D	USB3_PCH_RX	USB3_EXTB_D2R_N	14 61 65	
	USB_80D	USB3_PCH_RX	USB3_EXTB_D2R_RC_P	61 65	
	USB_80D	USB3_PCH_RX	USB3_EXTB_D2R_RC_N	61 65	
USB3_EXTB_TX	USB_80D	USB3_PCH_TX	USB3_EXTB_R2D_P	61 65	
USB3_EXTB_TX	USB_80D	USB3_PCH_TX	USB3_EXTB_R2D_N	61 65	
	USB_80D	USB3_PCH_TX	USB3_EXTB_R2D_C_P	14 61 65	
	USB_80D	USB3_PCH_TX	USB3_EXTB_R2D_C_N	14 61 65	
USB3_SD_RX	USB_80D	USB3_PCH_RX	USB3_SD_D2R_P	14 34 65	
USB3_SD_RX	USB_80D	USB3_PCH_RX	USB3_SD_D2R_N	14 34 65	
USB3_SD_TX	USB_80D	USB3_PCH_TX	USB3_SD_R2D_C_P	14 34 65	
USB3_SD_TX	USB_80D	USB3_PCH_TX	USB3_SD_R2D_C_N	14 34 65	
	USB_80D	USB3_PCH_RX	USB3_SD_D2R_C_P	34	
	USB_80D	USB3_PCH_RX	USB3_SD_D2R_C_N	34	
	USB_80D	USB3_PCH_TX	USB3_SD_R2D_P	34	
	USB_80D	USB3_PCH_TX	USB3_SD_R2D_N	34	
PCH_USB_RBIAS	PCH_USB_RBIAS		PCH_USB_RBIAS	14	
PCH_DIFFCLK_UNUSED_	CLK_PCIE_80D	CLK_PCIE	PCIE_CLK100M_PCH_P		
PCH_DIFFCLK_UNUSED_	CLK_PCIE_80D	CLK_PCIE	PCIE_CLK100M_PCH_N		
PCH_DIFFCLK_UNUSED_	CLK_PCIE_80D	CLK_PCIE	PCH_CLK96M_DOT_P		
PCH_DIFFCLK_UNUSED_	CLK_PCIE_80D	CLK_PCIE	PCH_CLK96M_DOT_N		
PCH_DIFFCLK_UNUSED_	CLK_PCIE_80D	CLK_PCIE	PCH_CLK100M_SATA_P		
PCH_DIFFCLK_UNUSED_	CLK_PCIE_80D	CLK_PCIE	PCH_CLK100M_SATA_N		
	CPU_45S	CLK_PCIE	PCH_CLK14P3M_REFCLK		

SYNC_MASTER=CLEAN_J43 SYNC_DATE=11/13/2012

PAGE TITLE: PCH Constraints 1

Apple Inc.

DRAWING NUMBER: <SCH_NUM> SIZE: D

REVISION: <E4LABEL>

BRANCH: <BRANCH>

PAGE: 112 OF 121

SHEET: 68 OF 76

NOTICE OF PROPRIETARY PROPERTY:
THE INFORMATION CONTAINED HEREIN IS THE PROPRIETARY PROPERTY OF APPLE INC.
THE POSESSOR AGREES TO THE FOLLOWING:
I TO MAINTAIN THIS DOCUMENT IN CONFIDENCE
II NOT TO REPRODUCE OR COPY IT
III NOT TO REVEAL OR PUBLISH IT IN WHOLE OR PART
IV ALL RIGHTS RESERVED

WWW.AliSaler.Com

LPC Bus Constraints

PHYSICAL_RULE_SET	LAYER	ALLOW ROUTE ON LAYER?	MINIMUM LINE WIDTH	MINIMUM NECK WIDTH	MAXIMUM NECK LENGTH	DIFFPAIR PRIMARY GAP	DIFFPAIR NECK GAP
LPC_45S	*	=45_OHM_SE	=45_OHM_SE	=45_OHM_SE	=45_OHM_SE	=STANDARD	=STANDARD
CLK_LPC_45S	*	=45_OHM_SE	=45_OHM_SE	=45_OHM_SE	=45_OHM_SE	=STANDARD	=STANDARD

SPACING_RULE_SET	LAYER	LINE-TO-LINE SPACING	WEIGHT
LPC	*	=3x_DIELECTRIC	?
CLK_LPC	*	=4x_DIELECTRIC	?

SOURCE: Calpella Platform Design Guide for Ibex Peak M (DG-398905-398905_v1.5), Section 3.15

SMBus Interface Constraints

PHYSICAL_RULE_SET	LAYER	ALLOW ROUTE ON LAYER?	MINIMUM LINE WIDTH	MINIMUM NECK WIDTH	MAXIMUM NECK LENGTH	DIFFPAIR PRIMARY GAP	DIFFPAIR NECK GAP
SMB_45S_R_50S	TOP,BOTTOM	=50_OHM_SE	=50_OHM_SE	=50_OHM_SE	=50_OHM_SE		
SMB_45S_R_50S	*	=45_OHM_SE	=45_OHM_SE	=45_OHM_SE	=45_OHM_SE	=STANDARD	=STANDARD

SPACING_RULE_SET	LAYER	LINE-TO-LINE SPACING	WEIGHT
SMB	*	=2x_DIELECTRIC	?

HD Audio Interface Constraints

PHYSICAL_RULE_SET	LAYER	ALLOW ROUTE ON LAYER?	MINIMUM LINE WIDTH	MINIMUM NECK WIDTH	MAXIMUM NECK LENGTH	DIFFPAIR PRIMARY GAP	DIFFPAIR NECK GAP
HDA_45S	*	=45_OHM_SE	=45_OHM_SE	=45_OHM_SE	=45_OHM_SE	=STANDARD	=STANDARD

SPACING_RULE_SET	LAYER	LINE-TO-LINE SPACING	WEIGHT
HDA	*	=2x_DIELECTRIC	?

SOURCE: Calpella Platform Design Guide for Ibex Peak M (DG-398905-398905_v1.5), Section 3.15

SIO Signal Constraints

PHYSICAL_RULE_SET	LAYER	ALLOW ROUTE ON LAYER?	MINIMUM LINE WIDTH	MINIMUM NECK WIDTH	MAXIMUM NECK LENGTH	DIFFPAIR PRIMARY GAP	DIFFPAIR NECK GAP
CLK_SLOW_45S	*	=45_OHM_SE	=45_OHM_SE	=45_OHM_SE	=45_OHM_SE	=STANDARD	=STANDARD

SPACING_RULE_SET	LAYER	LINE-TO-LINE SPACING	WEIGHT
CLK_SLOW	*	=4x_DIELECTRIC	?

SPI Interface Constraints

PHYSICAL_RULE_SET	LAYER	ALLOW ROUTE ON LAYER?	MINIMUM LINE WIDTH	MINIMUM NECK WIDTH	MAXIMUM NECK LENGTH	DIFFPAIR PRIMARY GAP	DIFFPAIR NECK GAP
SPI_45S	*	=45_OHM_SE	=45_OHM_SE	=45_OHM_SE	=45_OHM_SE	=STANDARD	=STANDARD

SPACING_RULE_SET	LAYER	LINE-TO-LINE SPACING	WEIGHT
SPI	*	=4x_DIELECTRIC	?

XDP Constraints

PHYSICAL_RULE_SET	LAYER	ALLOW ROUTE ON LAYER?	MINIMUM LINE WIDTH	MINIMUM NECK WIDTH	MAXIMUM NECK LENGTH	DIFFPAIR PRIMARY GAP	DIFFPAIR NECK GAP
PCH_45S	*	=45_OHM_SE	=45_OHM_SE	=45_OHM_SE	=45_OHM_SE	=STANDARD	=STANDARD

SPACING_RULE_SET	LAYER	LINE-TO-LINE SPACING	WEIGHT
PCH_ITP	*	=2:1_SPACING	?

DisplayPort

PHYSICAL_RULE_SET	LAYER	ALLOW ROUTE ON LAYER?	MINIMUM LINE WIDTH	MINIMUM NECK WIDTH	MAXIMUM NECK LENGTH	DIFFPAIR PRIMARY GAP	DIFFPAIR NECK GAP
DP_80D	*	=80_OHM_DIFF	=80_OHM_DIFF	=80_OHM_DIFF	=80_OHM_DIFF	=80_OHM_DIFF	=80_OHM_DIFF

SPACING_RULE_SET	LAYER	LINE-TO-LINE SPACING	WEIGHT
DP_2DP	*	=3x_DIELECTRIC	?
DP_2OTHERHS	*	=4x_DIELECTRIC	?
DP_2OTHER	*	=3x_DIELECTRIC	?
DP_AUX	*	=3x_DIELECTRIC	?

SPACING_RULE_SET	LAYER	LINE-TO-LINE SPACING	WEIGHT
DP_2DP	TOP,BOTTOM	=4x_DIELECTRIC	?
DP_2OTHERHS	TOP,BOTTOM	=6x_DIELECTRIC	?
DP_2OTHER	TOP,BOTTOM	=4x_DIELECTRIC	?
DP_AUX	TOP,BOTTOM	=4x_DIELECTRIC	?

NET_SPACING_TYPE1	NET_SPACING_TYPE2	AREA_TYPE	SPACING_RULE_SET
DP_TX	DP_TX	*	DP_2DP
DP_TX	*_TX	*	DP_2OTHERHS
DP_TX	*_RX	*	DP_2OTHERHS
DP_TX	*	*	DP_2OTHER

System Clock Signal Constraints

PHYSICAL_RULE_SET	LAYER	ALLOW ROUTE ON LAYER?	MINIMUM LINE WIDTH	MINIMUM NECK WIDTH	MAXIMUM NECK LENGTH	DIFFPAIR PRIMARY GAP	DIFFPAIR NECK GAP
CLK_SLOW_45S	*	=45_OHM_SE	=45_OHM_SE	=45_OHM_SE	=45_OHM_SE	=STANDARD	=STANDARD
CLK_25M_45S	*	=45_OHM_SE	=45_OHM_SE	=45_OHM_SE	=45_OHM_SE	=STANDARD	=STANDARD

SPACING_RULE_SET	LAYER	LINE-TO-LINE SPACING	WEIGHT
CLK_SLOW	*	=2x_DIELECTRIC	?
CLK_25M	*	=5x_DIELECTRIC	?

NOTE: 25MHz system clocks very sensitive to noise.

PCH Net Properties

ELECTRICAL_CONSTRAINT_SET	NET_TYPE PHYSICAL	NET_TYPE SPACING		
LPC_AD	LPC_45S	LPC	LPC AD<3..0>	14 37 46 64
LPC_FRAME_L	LPC_45S	LPC	LPC FRAME L	14 37 46 64
	LPC_45S	LPC	LPCPLUS RESET L	18 46 64
LPC_CLK33M	CLK_LPC_45S	CLK_LPC	LPC CLK24M SMC	17 37
	CLK_LPC_45S	CLK_LPC	LPC CLK24M SMC R	12 17
LPC_CLK33M	CLK_LPC_45S	CLK_LPC	LPC CLK24M LPCPLUS	17 46 64
	CLK_LPC_45S	CLK_LPC	LPC CLK24M LPCPLUS R	12 17
SMBUS_PCH_CLK	SMB_45S_R_50S	SMB	SMBUS PCH CLK	14 16 19 25 40 56
SMBUS_PCH_DATA	SMB_45S_R_50S	SMB	SMBUS PCH DATA	14 16 19 25 40 56
SMBUS_PCH_0_CLK	SMB_45S_R_50S	SMB	SML PCH 0 CLK	14 40
SMBUS_PCH_0_DATA	SMB_45S_R_50S	SMB	SML PCH 0 DATA	14 40
SMBUS_SMC_1_S0_SCL	SMB_45S_R_50S	SMB	SMBUS SMC 1 S0 SCL	14 32 37 40 43 44 64 73
SMBUS_SMC_1_S0_SDA	SMB_45S_R_50S	SMB	SMBUS SMC 1 S0 SDA	14 32 37 40 43 44 64 73
HDA_BIT_CLK	HDA_45S	HDA	HDA BIT CLK	12 61 65
	HDA_45S	HDA	HDA BIT CLK R	12
HDA_SYNC	HDA_45S	HDA	HDA SYNC	12 61 65
	HDA_45S	HDA	HDA SYNC R	12
HDA_RST_L	HDA_45S	HDA	HDA RST R L	12
	HDA_45S	HDA	HDA RST L	12 61 65
HDA_SDIN0	HDA_45S	HDA	HDA SDIN0	12 61 65
HDA_SDOUT	HDA_45S	HDA	HDA SDOUT	12 61 65
	HDA_45S	HDA	HDA SDOUT R	12 17
PM_SUS_CLK	CLK_SLOW_45S	CLK_SLOW	PM CLK32K SUSCLK R	13 38
	CLK_SLOW_45S	CLK_SLOW	SMC CLK32K	37 38
SPI_CLK	SPI_45S	SPI	SPI CLK R	14 46
	SPI_45S	SPI	SPI CLK	46
SPI_MOSI	SPI_45S	SPI	SPI MOSI R	14 46
	SPI_45S	SPI	SPI MOSI	46
SPI_MISO	SPI_45S	SPI	SPI MISO	14 46
	SPI_45S	SPI	SPI MISO R	46
SPI_CS0	SPI_45S	SPI	SPI CS0 R L	14 46
	SPI_45S	SPI	SPI CS0 L	46
	SPI_45S	SPI	SPI SMC CLK	37 46
	SPI_45S	SPI	SPI SMC MOSI	37 46
	SPI_45S	SPI	SPI SMC MISO	37 46
	SPI_45S	SPI	SPI SMC CS L	37 46
	SPI_45S	SPI	SPI MLB CLK	46
	SPI_45S	SPI	SPI MLB MOSI	46
	SPI_45S	SPI	SPI MLB MISO	46
	SPI_45S	SPI	SPI MLB CS L	46
PCIE_AP_R2D	PCIE_80D	PCIE_PCH_TX	PCIE AP R2D P	29 64
PCIE_AP_R2D	PCIE_80D	PCIE_PCH_TX	PCIE AP R2D N	29 64
	PCIE_80D	PCIE_PCH_TX	PCIE AP R2D C P	14 29
	PCIE_80D	PCIE_PCH_TX	PCIE AP R2D C N	14 29
PCIE_AP_D2R	PCIE_80D	PCIE_PCH_RX	PCIE AP D2R P	14 29 64
PCIE_AP_D2R	PCIE_80D	PCIE_PCH_RX	PCIE AP D2R N	14 29 64
PCIE_CLK100M_AP	CLK_PCIE_80D	CLK_PCIE	PCIE CLK100M AP P	12 29 64
PCIE_CLK100M_AP	CLK_PCIE_80D	CLK_PCIE	PCIE CLK100M AP N	12 29 64
PCIE_TBT_R2D	PCIE_80D	PCIE_PCH_TX	PCIE TBT R2D P<3..0>	25
PCIE_TBT_R2D	PCIE_80D	PCIE_PCH_TX	PCIE TBT R2D N<3..0>	25
	PCIE_80D	PCIE_PCH_TX	PCIE TBT R2D C P<3..0>	14 25
	PCIE_80D	PCIE_PCH_TX	PCIE TBT R2D C N<3..0>	14 25
PCIE_TBT_D2R	PCIE_80D	PCIE_PCH_RX	PCIE TBT D2R P<3..0>	14 25
PCIE_TBT_D2R	PCIE_80D	PCIE_PCH_RX	PCIE TBT D2R N<3..0>	14 25
	PCIE_80D	PCIE_PCH_RX	PCIE TBT D2R C P<3..0>	25
	PCIE_80D	PCIE_PCH_RX	PCIE TBT D2R C N<3..0>	25
PCIE_CLK100M_TBT	CLK_PCIE_80D	CLK_PCIE	PCIE CLK100M TBT P	12 25
PCIE_CLK100M_TBT	CLK_PCIE_80D	CLK_PCIE	PCIE CLK100M TBT N	12 25
	CLK_PCIE_80D	CLK_PCIE	PEG CLK100M P	
	CLK_PCIE_80D	CLK_PCIE	PEG CLK100M N	
XDP_TDI	PCH_45S	PCH_ITP	XDP PCH TDI	12 16 64
XDP_TDO	PCH_45S	PCH_ITP	XDP PCH TDO	12 16 64
XDP_TMS	PCH_45S	PCH_ITP	XDP PCH TMS	12 16 64
XDP_TCK	PCH_45S	PCH_ITP	XDP PCH TCK	12 16 64
PCIE_CAM	PCIE_80D	PCIE_PCH_TX	PCIE CAMERA R2D P	31 32
PCIE_CAM	PCIE_80D	PCIE_PCH_TX	PCIE CAMERA R2D N	31 32
	PCIE_80D	PCIE_PCH_TX	PCIE CAMERA R2D C P	14 32
	PCIE_80D	PCIE_PCH_TX	PCIE CAMERA R2D C N	14 32
PCIE_CAM	PCIE_80D	PCIE_PCH_RX	PCIE CAMERA D2R P	14 32
PCIE_CAM	PCIE_80D	PCIE_PCH_RX	PCIE CAMERA D2R N	14 32
	PCIE_80D	PCIE_PCH_RX	PCIE CAMERA D2R C P	31 32
	PCIE_80D	PCIE_PCH_RX	PCIE CAMERA D2R C N	31 32
PCIE_CLK100M_CAM	CLK_PCIE_80D	CLK_PCIE	PCIE CLK100M CAMERA P	12 32
PCIE_CLK100M_CAM	CLK_PCIE_80D	CLK_PCIE	PCIE CLK100M CAMERA N	12 32
	CLK_PCIE_80D	CLK_PCIE	PCIE CLK100M CAMERA C P	31 32
	CLK_PCIE_80D	CLK_PCIE	PCIE CLK100M CAMERA C N	31 32

Clock Net Properties

ELECTRICAL_CONSTRAINT_SET	NET_TYPE PHYSICAL	NET_TYPE SPACING		
SYSCLK_CLK32K_RTC	CLK_SLOW_45S	CLK_SLOW	SYSCLK CLK32K RTCX1	
SYSCLK_CLK25M_SB	CLK_25M_45S	CLK_25M	SYSCLK CLK25M CAMERA	17 32
	CLK_25M_45S	CLK_25M	CLK25M CAM CLKP	31 32
	CLK_25M_45S	CLK_25M	CLK25M CAM XTALP R	32
	CLK_25M_45S	CLK_25M	CLK25M CAM XTALP	32
	CLK_25M_45S	CLK_25M	CLK25M CAM XTALN	32
	CLK_25M_45S	CLK_25M	CLK25M CAM CLKN	31 32
SYSCLK_CLK25M_TBT	CLK_25M_45S	CLK_25M	SYSCLK CLK25M TBT	17 25
	CLK_25M_45S	CLK_25M	SYSCLK CLK25M TBT R	25
SYSCLK_CLK25M_XTAL	CLK_25M_45S	CLK_25M	SYSCLK CLK25M X1	17
	CLK_25M_45S	CLK_25M	SYSCLK CLK25M X2	17
	CLK_25M_45S	CLK_25M	SYSCLK CLK25M X2 R	17
	CLK_25M_45S	CLK_25M	SDCLK CLK25M X2	34
	CLK_25M_45S	CLK_25M	SDCLK CLK25M X2 R	34 75
	CLK_25M_45S	CLK_25M	SDSCLK CLK25M X1	34

SYNC_MASTER=J41_MLB SYNC_DATE=12/14/2012

PAGE TITLE

PCH Constraints 2

Apple Inc.

DRAWING NUMBER <SCH_NUM> SIZE D

REVISION <E4LABEL>

BRANCH <BRANCH>

PAGE 113 OF 121

SHEET 69 OF 76

NOTICE OF PROPRIETARY PROPERTY:
THE INFORMATION CONTAINED HEREIN IS THE PROPRIETARY PROPERTY OF APPLE INC.
THE POSESSOR AGREES TO THE FOLLOWING:
I TO MAINTAIN THIS DOCUMENT IN CONFIDENCE
II NOT TO REPRODUCE OR COPY IT
III NOT TO REVEAL OR PUBLISH IT IN WHOLE OR PART
IV ALL RIGHTS RESERVED

WWW.AliSaler.Com

Memory Bus Constraints

PHYSICAL_RULE_SET	LAYER	ALLOW ROUTE ON LAYER?	MINIMUM LINE WIDTH	MINIMUM NECK WIDTH	MAXIMUM NECK LENGTH	DIFFPAIR PRIMARY GAP	DIFFPAIR NECK GAP
MEM_40S	*	=40_OHM_SE	=40_OHM_SE	=40_OHM_SE	=40_OHM_SE	=40_OHM_SE	=40_OHM_SE
MEM_50S	*	=50_OHM_SE	=50_OHM_SE	=50_OHM_SE	=50_OHM_SE	=50_OHM_SE	=50_OHM_SE
MEM_70D	*	=70_OHM_DIFF	=70_OHM_DIFF	=70_OHM_DIFF	=70_OHM_DIFF	=70_OHM_DIFF	=70_OHM_DIFF
MEM_73D	*	=73_OHM_DIFF	=73_OHM_DIFF	=73_OHM_DIFF	=73_OHM_DIFF	=73_OHM_DIFF	=73_OHM_DIFF

Spacing Rule Sets

SPACING_RULE_SET	LAYER	LINE-TO-LINE SPACING	WEIGHT
MEM_DATA2SELF	*	=2x_DIELECTRIC	?
MEM_DATA2OTHERMEM	*	=8x_DIELECTRIC	?
MEM_DQS2OWNDATA	*	=3x_DIELECTRIC	?
MEM_CMD2CMD	*	=3x_DIELECTRIC	?
MEM_CMD2CTRL	*	=3x_DIELECTRIC	?
MEM_CTRL2CTRL	*	=3x_DIELECTRIC	?
MEM_CLK2CLK	*	=6x_DIELECTRIC	?
MEM_2OTHERMEM	*	=4x_DIELECTRIC	?
MEM_2PWR	*	=2x_DIELECTRIC	10000
MEM_2GND	*	=2x_DIELECTRIC	10000
MEM_2OTHER	*	=6x_DIELECTRIC	?

Memory to Power Spacing

NET_SPACING_TYPE1	NET_SPACING_TYPE2	AREA_TYPE	SPACING_RULE_SET
MEM_PWR	MEM_*	*	MEM_2PWR
MEM_PWR	*	*	DEFAULT

NET_PHYSICAL_TYPE	AREA_TYPE	PHYSICAL_RULE_SET
MEM_70D	MEM_TERM	MEM_73D
MEM_40S	MEM_TERM	MEM_50S

Memory to GND Spacing

NET_SPACING_TYPE1	NET_SPACING_TYPE2	AREA_TYPE	SPACING_RULE_SET
GND	MEM_*	*	MEM_2GND

Memory Bus Spacing Group Assignments

NET_SPACING_TYPE1	NET_SPACING_TYPE2	AREA_TYPE	SPACING_RULE_SET
MEM_A_DQS_0	MEM_A_DATA_0	*	MEM_DQS2OWNDATA
MEM_A_DQS_1	MEM_A_DATA_1	*	MEM_DQS2OWNDATA
MEM_A_DQS_2	MEM_A_DATA_2	*	MEM_DQS2OWNDATA
MEM_A_DQS_3	MEM_A_DATA_3	*	MEM_DQS2OWNDATA
MEM_A_DQS_4	MEM_A_DATA_4	*	MEM_DQS2OWNDATA
MEM_A_DQS_5	MEM_A_DATA_5	*	MEM_DQS2OWNDATA
MEM_A_DQS_6	MEM_A_DATA_6	*	MEM_DQS2OWNDATA
MEM_A_DQS_7	MEM_A_DATA_7	*	MEM_DQS2OWNDATA
MEM_B_DQS_0	MEM_B_DATA_0	*	MEM_DQS2OWNDATA
MEM_B_DQS_1	MEM_B_DATA_1	*	MEM_DQS2OWNDATA
MEM_B_DQS_2	MEM_B_DATA_2	*	MEM_DQS2OWNDATA
MEM_B_DQS_3	MEM_B_DATA_3	*	MEM_DQS2OWNDATA
MEM_B_DQS_4	MEM_B_DATA_4	*	MEM_DQS2OWNDATA
MEM_B_DQS_5	MEM_B_DATA_5	*	MEM_DQS2OWNDATA
MEM_B_DQS_6	MEM_B_DATA_6	*	MEM_DQS2OWNDATA
MEM_B_DQS_7	MEM_B_DATA_7	*	MEM_DQS2OWNDATA

NET_SPACING_TYPE1	NET_SPACING_TYPE2	AREA_TYPE	SPACING_RULE_SET
MEM_*_DATA_*	=SAME	*	MEM_DATA2SELF

NET_SPACING_TYPE1	NET_SPACING_TYPE2	AREA_TYPE	SPACING_RULE_SET
MEM_*_DATA_*	MEM_*	*	MEM_DATA2OTHERMEM

NET_SPACING_TYPE1	NET_SPACING_TYPE2	AREA_TYPE	SPACING_RULE_SET
MEM_CMD	MEM_CMD	*	MEM_CMD2CMD
MEM_CMD	MEM_CTRL	*	MEM_CMD2CTRL
MEM_CTRL	MEM_CTRL	*	MEM_CTRL2CTRL

NET_SPACING_TYPE1	NET_SPACING_TYPE2	AREA_TYPE	SPACING_RULE_SET
MEM_CLK	MEM_CLK	*	MEM_CLK2CLK

NET_SPACING_TYPE1	NET_SPACING_TYPE2	AREA_TYPE	SPACING_RULE_SET
MEM_*	MEM_*	*	MEM_2OTHERMEM

NET_SPACING_TYPE1	NET_SPACING_TYPE2	AREA_TYPE	SPACING_RULE_SET
MEM_A_DQS_0	*	*	MEM_2OTHER
MEM_A_DQS_1	*	*	MEM_2OTHER
MEM_A_DQS_2	*	*	MEM_2OTHER
MEM_A_DQS_3	*	*	MEM_2OTHER
MEM_A_DQS_4	*	*	MEM_2OTHER
MEM_A_DQS_5	*	*	MEM_2OTHER
MEM_A_DQS_6	*	*	MEM_2OTHER
MEM_A_DQS_7	*	*	MEM_2OTHER
MEM_B_DQS_0	*	*	MEM_2OTHER
MEM_B_DQS_1	*	*	MEM_2OTHER
MEM_B_DQS_2	*	*	MEM_2OTHER
MEM_B_DQS_3	*	*	MEM_2OTHER
MEM_B_DQS_4	*	*	MEM_2OTHER
MEM_B_DQS_5	*	*	MEM_2OTHER
MEM_B_DQS_6	*	*	MEM_2OTHER
MEM_B_DQS_7	*	*	MEM_2OTHER
MEM_A_DATA_0	*	*	MEM_2OTHER
MEM_A_DATA_1	*	*	MEM_2OTHER
MEM_A_DATA_2	*	*	MEM_2OTHER
MEM_A_DATA_3	*	*	MEM_2OTHER
MEM_A_DATA_4	*	*	MEM_2OTHER
MEM_A_DATA_5	*	*	MEM_2OTHER
MEM_A_DATA_6	*	*	MEM_2OTHER
MEM_A_DATA_7	*	*	MEM_2OTHER
MEM_B_DATA_0	*	*	MEM_2OTHER
MEM_B_DATA_1	*	*	MEM_2OTHER
MEM_B_DATA_2	*	*	MEM_2OTHER
MEM_B_DATA_3	*	*	MEM_2OTHER
MEM_B_DATA_4	*	*	MEM_2OTHER
MEM_B_DATA_5	*	*	MEM_2OTHER
MEM_B_DATA_6	*	*	MEM_2OTHER
MEM_B_DATA_7	*	*	MEM_2OTHER
MEM_CMD	*	*	MEM_2OTHER
MEM_CTRL	*	*	MEM_2OTHER
MEM_CLK	*	*	MEM_2OTHER

NET_SPACING_TYPE1	NET_SPACING_TYPE2	AREA_TYPE	SPACING_RULE_SET
MEM_A_DATA_0	MEM_*_DATA_*	*	MEM_2OTHERMEM
MEM_A_DATA_1	MEM_*_DATA_*	*	MEM_2OTHERMEM
MEM_A_DATA_2	MEM_*_DATA_*	*	MEM_2OTHERMEM
MEM_A_DATA_3	MEM_*_DATA_*	*	MEM_2OTHERMEM
MEM_A_DATA_4	MEM_*_DATA_*	*	MEM_2OTHERMEM
MEM_A_DATA_5	MEM_*_DATA_*	*	MEM_2OTHERMEM
MEM_A_DATA_6	MEM_*_DATA_*	*	MEM_2OTHERMEM
MEM_A_DATA_7	MEM_*_DATA_*	*	MEM_2OTHERMEM
MEM_B_DATA_0	MEM_*_DATA_*	*	MEM_2OTHERMEM
MEM_B_DATA_1	MEM_*_DATA_*	*	MEM_2OTHERMEM
MEM_B_DATA_2	MEM_*_DATA_*	*	MEM_2OTHERMEM
MEM_B_DATA_3	MEM_*_DATA_*	*	MEM_2OTHERMEM
MEM_B_DATA_4	MEM_*_DATA_*	*	MEM_2OTHERMEM
MEM_B_DATA_5	MEM_*_DATA_*	*	MEM_2OTHERMEM
MEM_B_DATA_6	MEM_*_DATA_*	*	MEM_2OTHERMEM
MEM_B_DATA_7	MEM_*_DATA_*	*	MEM_2OTHERMEM

Memory Net Properties

ELECTRICAL_CONSTRAINT_SET	NET_TYPE PHYSICAL	NET_TYPE SPACING		
MEM_A_CLK0	MEM_70D	MEM_CLK	MEM_A_CLK_P<0>	7 20 24
MEM_A_CLK0	MEM_70D	MEM_CLK	MEM_A_CLK_N<0>	7 20 24
MEM_A_CLK1	MEM_70D	MEM_CLK	MEM_A_CLK_P<1>	7 21 24
MEM_A_CLK1	MEM_70D	MEM_CLK	MEM_A_CLK_N<1>	7 21 24
MEM_A_CTRL	MEM_40S	MEM_CTRL	MEM_A_CS_L<1..0>	7 20 21 24
MEM_A_CTRL	MEM_40S	MEM_CTRL	MEM_A_ODT<0>	7 20 21 24 63
MEM_A_CKE0	MEM_40S	MEM_CMD	MEM_A_CKE<1..0>	7 20 24
MEM_A_CKE1	MEM_40S	MEM_CMD	MEM_A_CKE<3..2>	7 21 24
MEM_A_CMD0	MEM_40S	MEM_CMD	MEM_A_CAA<9..0>	7 20 24 63
MEM_A_CMD1	MEM_40S	MEM_CMD	MEM_A_CAB<9..0>	7 21 24 63
MEM_A_DQ_BYTE0	MEM_40S	MEM_A_DATA_0	MEM_A_DQ<7..0>	7 63
MEM_A_DQ_BYTE1	MEM_40S	MEM_A_DATA_1	MEM_A_DQ<15..8>	7 63
MEM_A_DQ_BYTE2	MEM_40S	MEM_A_DATA_2	MEM_A_DQ<23..16>	7 63
MEM_A_DQ_BYTE3	MEM_40S	MEM_A_DATA_3	MEM_A_DQ<31..24>	7 63
MEM_A_DQ_BYTE4	MEM_40S	MEM_A_DATA_4	MEM_A_DQ<39..32>	7 21 63
MEM_A_DQ_BYTE5	MEM_40S	MEM_A_DATA_5	MEM_A_DQ<47..40>	7 63
MEM_A_DQ_BYTE6	MEM_40S	MEM_A_DATA_6	MEM_A_DQ<55..48>	7 63
MEM_A_DQ_BYTE7	MEM_40S	MEM_A_DATA_7	MEM_A_DQ<63..56>	7 63
MEM_A_DQS0	MEM_70D	MEM_A_DQS_0	MEM_A_DQS_P<0>	7 63
MEM_A_DQS0	MEM_70D	MEM_A_DQS_0	MEM_A_DQS_N<0>	7 63
MEM_A_DQS1	MEM_70D	MEM_A_DQS_1	MEM_A_DQS_P<1>	7 63
MEM_A_DQS1	MEM_70D	MEM_A_DQS_1	MEM_A_DQS_N<1>	7 63
MEM_A_DQS2	MEM_70D	MEM_A_DQS_2	MEM_A_DQS_P<2>	7 63
MEM_A_DQS2	MEM_70D	MEM_A_DQS_2	MEM_A_DQS_N<2>	7 63
MEM_A_DQS3	MEM_70D	MEM_A_DQS_3	MEM_A_DQS_P<3>	7 63
MEM_A_DQS3	MEM_70D	MEM_A_DQS_3	MEM_A_DQS_N<3>	7 63
MEM_A_DQS4	MEM_70D	MEM_A_DQS_4	MEM_A_DQS_P<4>	7 63
MEM_A_DQS4	MEM_70D	MEM_A_DQS_4	MEM_A_DQS_N<4>	7 63
MEM_A_DQS5	MEM_70D	MEM_A_DQS_5	MEM_A_DQS_P<5>	7 63
MEM_A_DQS5	MEM_70D	MEM_A_DQS_5	MEM_A_DQS_N<5>	7 63
MEM_A_DQS6	MEM_70D	MEM_A_DQS_6	MEM_A_DQS_P<6>	7 21 63
MEM_A_DQS6	MEM_70D	MEM_A_DQS_6	MEM_A_DQS_N<6>	7 21 63
MEM_A_DQS7	MEM_70D	MEM_A_DQS_7	MEM_A_DQS_P<7>	7 63
MEM_A_DQS7	MEM_70D	MEM_A_DQS_7	MEM_A_DQS_N<7>	7 63
MEM_B_CLK0	MEM_70D	MEM_CLK	MEM_B_CLK_P<0>	7 22 24
MEM_B_CLK0	MEM_70D	MEM_CLK	MEM_B_CLK_N<0>	7 22 24
MEM_B_CLK1	MEM_70D	MEM_CLK	MEM_B_CLK_P<1>	7 23 24
MEM_B_CLK1	MEM_70D	MEM_CLK	MEM_B_CLK_N<1>	7 23 24
MEM_B_CTRL	MEM_40S	MEM_CTRL	MEM_B_CS_L<1..0>	7 22 23 24
MEM_B_CTRL	MEM_40S	MEM_CTRL	MEM_B_ODT<0>	7 22 23 24 63
MEM_B_CKE0	MEM_40S	MEM_CMD	MEM_B_CKE<1..0>	7 22 24
MEM_B_CKE1	MEM_40S	MEM_CMD	MEM_B_CKE<3..2>	7 23 24
MEM_B_CMD0	MEM_40S	MEM_CMD	MEM_B_CAA<9..0>	7 22 24 63
MEM_B_CMD1	MEM_40S	MEM_CMD	MEM_B_CAB<9..0>	7 23 24 63
MEM_B_DQ_BYTE0	MEM_40S	MEM_B_DATA_0	MEM_B_DQ<7..0>	7 63
MEM_B_DQ_BYTE1	MEM_40S	MEM_B_DATA_1	MEM_B_DQ<15..8>	7 63
MEM_B_DQ_BYTE2	MEM_40S	MEM_B_DATA_2	MEM_B_DQ<23..16>	7 63
MEM_B_DQ_BYTE3	MEM_40S	MEM_B_DATA_3	MEM_B_DQ<31..24>	7 63
MEM_B_DQ_BYTE4	MEM_40S	MEM_B_DATA_4	MEM_B_DQ<39..32>	7 23 63
MEM_B_DQ_BYTE5	MEM_40S	MEM_B_DATA_5	MEM_B_DQ<47..40>	7 63
MEM_B_DQ_BYTE6	MEM_40S	MEM_B_DATA_6	MEM_B_DQ<55..48>	7 63
MEM_B_DQ_BYTE7	MEM_40S	MEM_B_DATA_7	MEM_B_DQ<63..56>	7 63
MEM_B_DQS0	MEM_70D	MEM_B_DQS_0	MEM_B_DQS_P<0>	7 63
MEM_B_DQS0	MEM_70D	MEM_B_DQS_0	MEM_B_DQS_N<0>	7 63
MEM_B_DQS1	MEM_70D	MEM_B_DQS_1	MEM_B_DQS_P<1>	7 63
MEM_B_DQS1	MEM_70D	MEM_B_DQS_1	MEM_B_DQS_N<1>	7 63
MEM_B_DQS2	MEM_70D	MEM_B_DQS_2	MEM_B_DQS_P<2>	7 63
MEM_B_DQS2	MEM_70D	MEM_B_DQS_2	MEM_B_DQS_N<2>	7 63
MEM_B_DQS3	MEM_70D	MEM_B_DQS_3	MEM_B_DQS_P<3>	7 63
MEM_B_DQS3	MEM_70D	MEM_B_DQS_3	MEM_B_DQS_N<3>	7 63
MEM_B_DQS4	MEM_70D	MEM_B_DQS_4	MEM_B_DQS_P<4>	7 63
MEM_B_DQS4	MEM_70D	MEM_B_DQS_4	MEM_B_DQS_N<4>	7 63
MEM_B_DQS5	MEM_70D	MEM_B_DQS_5	MEM_B_DQS_P<5>	7 63
MEM_B_DQS5	MEM_70D	MEM_B_DQS_5	MEM_B_DQS_N<5>	7 63
MEM_B_DQS6	MEM_70D	MEM_B_DQS_6	MEM_B_DQS_P<6>	7 23 63
MEM_B_DQS6	MEM_70D	MEM_B_DQS_6	MEM_B_DQS_N<6>	7 23 63
MEM_B_DQS7	MEM_70D	MEM_B_DQS_7	MEM_B_DQS_P<7>	7 63
MEM_B_DQS7	MEM_70D	MEM_B_DQS_7	MEM_B_DQS_N<7>	7 63
		MEM_PWR	PP1V2_S3	17 19 20 21 22 23 42 53 62
		MEM_PWR	PP0V6_S3_MEM_VREFCA_A	18 19 20 21
		MEM_PWR	PP0V6_S3_MEM_VREFDQ_A	18 19 20 21
		MEM_PWR	PP0V6_S3_MEM_VREFCA_B	18 19 22 23
		MEM_PWR	PP0V6_S3_MEM_VREFDQ_B	18 19 22 23

SYNC_MASTER=CONSTRAINTS SYNC_DATE=09/25/2012

PAGE TITLE
Memory Constraints

Apple Inc.

DRAWING NUMBER <SCH_NUM> SIZE D
REVISION <E4LABEL>
BRANCH <BRANCH>
PAGE 114 OF 121
SHEET 70 OF 76

NOTICE OF PROPRIETARY PROPERTY:
THE INFORMATION CONTAINED HEREIN IS THE PROPRIETARY PROPERTY OF APPLE INC.
THE POSESSOR AGREES TO THE FOLLOWING:
I TO MAINTAIN THIS DOCUMENT IN CONFIDENCE
II NOT TO REPRODUCE OR COPY IT
III NOT TO REVEAL OR PUBLISH IT IN WHOLE OR PART
IV ALL RIGHTS RESERVED

WWW.AliSaler.Com

DisplayPort Signal Constraints

NOTE: DisplayPort Physical/Spacing Constraints provided by Chipset or GPU page.

Thunderbolt SPI Signal Constraints

PHYSICAL_RULE_SET	LAYER	ALLOW ROUTE ON LAYER?	MINIMUM LINE WIDTH	MINIMUM NECK WIDTH	MAXIMUM NECK LENGTH	DIFFPAIR PRIMARY GAP	DIFFPAIR NECK GAP
TBT_SPI_45S	*	=45_OHM_SE	=45_OHM_SE	=45_OHM_SE	=45_OHM_SE	=STANDARD	=STANDARD

SPACING_RULE_SET	LAYER	LINE-TO-LINE SPACING	WEIGHT
TBT_SPI	*	=2x_DIELECTRIC	?

Thunderbolt/DP Connector Signal Constraints

PHYSICAL_RULE_SET	LAYER	ALLOW ROUTE ON LAYER?	MINIMUM LINE WIDTH	MINIMUM NECK WIDTH	MAXIMUM NECK LENGTH	DIFFPAIR PRIMARY GAP	DIFFPAIR NECK GAP
TBTDP_80D	*	=80_OHM_DIFF	=80_OHM_DIFF	=80_OHM_DIFF	=80_OHM_DIFF	=80_OHM_DIFF	=80_OHM_DIFF

NET_SPACING_TYPE1	NET_SPACING_TYPE2	AREA_TYPE	SPACING_RULE_SET
TBTDP_TX	TBTDP_TX	*	TBTDP_TX2TX
TBTDP_RX	TBTDP_RX	*	TBTDP_RX2RX
TBTDP_TX	TBTDP_RX	*	TBTDP_TX2RX
TBTDP_RX	TBTDP_TX	*	TBTDP_TX2RX
TBTDP_TX	*_TX	*	TBTDP_2OTHERHS
TBTDP_RX	*_TX	*	TBTDP_2OTHERHS
TBTDP_TX	*_RX	*	TBTDP_2OTHERHS
TBTDP_RX	*_RX	*	TBTDP_2OTHERHS
TBTDP_TX	*	*	TBTDP_2OTHER
TBTDP_RX	*	*	TBTDP_2OTHER

SPACING_RULE_SET	LAYER	LINE-TO-LINE SPACING	WEIGHT
TBTDP_TX2TX	TOP,BOTTOM	=6x_DIELECTRIC	?
TBTDP_RX2RX	TOP,BOTTOM	=6x_DIELECTRIC	?
TBTDP_TX2RX	TOP,BOTTOM	=10x_DIELECTRIC	?
TBTDP_2OTHERHS	TOP,BOTTOM	=10x_DIELECTRIC	?
TBTDP_2OTHER	TOP,BOTTOM	=6x_DIELECTRIC	?

SPACING_RULE_SET	LAYER	LINE-TO-LINE SPACING	WEIGHT
TBTDP_TX2TX	*	=4x_DIELECTRIC	?
TBTDP_RX2RX	*	=4x_DIELECTRIC	?
TBTDP_TX2RX	*	=6x_DIELECTRIC	?
TBTDP_2OTHERHS	*	=6x_DIELECTRIC	?
TBTDP_2OTHER	*	=4x_DIELECTRIC	?

Thunderbolt/DP Net Properties

ELECTRICAL_CONSTRAINT_SET	NET_TYPE PHYSICAL	NET_TYPE SPACING		
TBT_A_R2D	TBTDP_80D	TBTDP_TX	TBT_A_R2D_C_P<1..0>	25 28
TBT_A_R2D	TBTDP_80D	TBTDP_TX	TBT_A_R2D_C_N<1..0>	25 28
	TBTDP_80D	TBTDP_TX	TBT_A_R2D_P<1..0>	28
	TBTDP_80D	TBTDP_TX	TBT_A_R2D_N<1..0>	28
DP_TBTPA_ML1	DP_80D	DP_TX	DP_TBTPA_ML_C_P<1>	25 28
DP_TBTPA_ML1	DP_80D	DP_TX	DP_TBTPA_ML_C_N<1>	25 28
DP_TBTPA_ML3	DP_80D	DP_TX	DP_TBTPA_ML_C_P<3>	25 28
DP_TBTPA_ML3	DP_80D	DP_TX	DP_TBTPA_ML_C_N<3>	25 28
	DP_80D	DP_TX	DP_TBTPA_ML_P<3..1:2>	28
	DP_80D	DP_TX	DP_TBTPA_ML_N<3..1:2>	28
	DP_80D	DP_TX	DP_A_LSX_ML_P<1>	28
	DP_80D	DP_TX	DP_A_LSX_ML_N<1>	28
	TBTDP_80D	TBTDP_RX	TBT_A_D2R_C_P<1..0>	28
	TBTDP_80D	TBTDP_RX	TBT_A_D2R_C_N<1..0>	28
TBT_A_D2R1	TBTDP_80D	TBTDP_RX	TBT_A_D2R_P<1>	25 28
TBT_A_D2R1	TBTDP_80D	TBTDP_RX	TBT_A_D2R_N<1>	25 28
TBT_A_D2R0	TBTDP_80D	TBTDP_RX	TBT_A_D2R_P<0>	25 28
TBT_A_D2R0	TBTDP_80D	TBTDP_RX	TBT_A_D2R_N<0>	25 28
TBT_A_AUXCH	DP_80D	DP_AUX	DP_TBTPA_AUXCH_C_P	25 28
TBT_A_AUXCH	DP_80D	DP_AUX	DP_TBTPA_AUXCH_C_N	25 28
	DP_80D	DP_AUX	DP_TBTPA_AUXCH_P	28
	DP_80D	DP_AUX	DP_TBTPA_AUXCH_N	28
	DP_80D	DP_AUX	DP_A_AUXCH_DDC_P	
	DP_80D	DP_AUX	DP_A_AUXCH_DDC_N	
	TBTDP_80D	TBTDP_RX	TBT_A_D2R1_AUXDDC_P	28
	TBTDP_80D	TBTDP_RX	TBT_A_D2R1_AUXDDC_N	28
TBT_B_R2D	TBTDP_80D	TBTDP_TX	TBT_B_R2D_C_P<1..0>	64
TBT_B_R2D	TBTDP_80D	TBTDP_TX	TBT_B_R2D_C_N<1..0>	64
	TBTDP_80D	TBTDP_TX	TBT_B_R2D_P<1..0>	
	TBTDP_80D	TBTDP_TX	TBT_B_R2D_N<1..0>	
DP_TBTPB_ML	DP_80D	DP_TX	NC_DP_TBTPB_ML_CP<3..1:2>	64
DP_TBTPB_ML	DP_80D	DP_TX	NC_DP_TBTPB_ML_CN<3..1:2>	64
	DP_80D	DP_TX	DP_TBTPB_ML_P<3..1:2>	
	DP_80D	DP_TX	DP_TBTPB_ML_N<3..1:2>	
	DP_80D	DP_TX	DP_B_LSX_ML_P<1>	
	DP_80D	DP_TX	DP_B_LSX_ML_N<1>	
	TBTDP_80D	TBTDP_RX	TBT_B_D2R_C_P<1..0>	
	TBTDP_80D	TBTDP_RX	TBT_B_D2R_C_N<1..0>	
TBT_B_D2R	TBTDP_80D	TBTDP_RX	TBT_B_D2R_P<1..0>	64
TBT_B_D2R	TBTDP_80D	TBTDP_RX	TBT_B_D2R_N<1..0>	64
TBT_B_AUXCH	DP_80D	DP_AUX	NC_DP_TBTPB_AUXCH_CP	25 64
TBT_B_AUXCH	DP_80D	DP_AUX	NC_DP_TBTPB_AUXCH_CN	25 64
	DP_80D	DP_AUX	DP_TBTPB_AUXCH_P	
	DP_80D	DP_AUX	DP_TBTPB_AUXCH_N	
	DP_80D	DP_AUX	DP_B_AUXCH_DDC_P	
	DP_80D	DP_AUX	DP_B_AUXCH_DDC_N	
	TBTDP_80D	TBTDP_RX	TBT_B_D2R1_AUXDDC_P	
	TBTDP_80D	TBTDP_RX	TBT_B_D2R1_AUXDDC_N	

Only used on dual-port hosts.

Thunderbolt IC Net Properties

ELECTRICAL_CONSTRAINT_SET	NET_TYPE PHYSICAL	NET_TYPE SPACING		
	DP_80D	DP_TX	DP_TBTSRC_ML_C_P<3..0>	
	DP_80D	DP_TX	DP_TBTSRC_ML_C_N<3..0>	
	DP_80D	DP_AUX	DP_TBTSRC_AUXCH_C_P	
	DP_80D	DP_AUX	DP_TBTSRC_AUXCH_C_N	
TBT_SPI_CLK	TBT_SPI_45S	TBT_SPI	TBT_SPI_CLK	25
TBT_SPI_MOSI	TBT_SPI_45S	TBT_SPI	TBT_SPI_MOSI	25
TBT_SPI_MISO	TBT_SPI_45S	TBT_SPI	TBT_SPI_MISO	25
TBT_SPI_CS_L	TBT_SPI_45S	TBT_SPI	TBT_SPI_CS_L	25

Only used on hosts supporting Thunderbolt video-in

SYNC_MASTER=CONSTRAINTS SYNC_DATE=09/25/2012

PAGE TITLE: Thunderbolt Constraints

Apple Inc.

DRAWING NUMBER: <SCH_NUM> SIZE: D

REVISION: <E4LABEL>

BRANCH: <BRANCH>

PAGE: 115 OF 121

SHEET: 71 OF 76

NOTICE OF PROPRIETARY PROPERTY:
THE INFORMATION CONTAINED HEREIN IS THE PROPRIETARY PROPERTY OF APPLE INC.
THE POSESSOR AGREES TO THE FOLLOWING:
I TO MAINTAIN THIS DOCUMENT IN CONFIDENCE
II NOT TO REPRODUCE OR COPY IT
III NOT TO REVEAL OR PUBLISH IT IN WHOLE OR PART
IV ALL RIGHTS RESERVED

WWW.AliSaler.Com

MIPI Interface Constraints

PHYSICAL_RULE_SET	LAYER	ALLOW ROUTE ON LAYER?	MINIMUM LINE WIDTH	MINIMUM NECK WIDTH	MAXIMUM NECK LENGTH	DIFFPAIR PRIMARY GAP	DIFFPAIR NECK GAP
MIPI_85D	*	=85_OHM_DIFF	=85_OHM_DIFF	=85_OHM_DIFF	=85_OHM_DIFF	=85_OHM_DIFF	=85_OHM_DIFF

SPACING_RULE_SET	LAYER	LINE-TO-LINE SPACING	WEIGHT
MIPI_2OTHER	*	=4X_DIELECTRIC	?
MIPI_2CLK	*	=6X_DIELECTRIC	?
MIPICLK_2OTHER	*	=7X_DIELECTRIC	?

SPACING_RULE_SET	LAYER	LINE-TO-LINE SPACING	WEIGHT
MIPI_2OTHER	TOP,BOTTOM	=6X_DIELECTRIC	?
MIPI_2CLK	TOP,BOTTOM	=8X_DIELECTRIC	?
MIPICLK_2OTHER	TOP,BOTTOM	=10X_DIELECTRIC	?

NET_SPACING_TYPE1	NET_SPACING_TYPE2	AREA_TYPE	SPACING_RULE_SET
MIPI_DATA	*	*	MIPI_2OTHER
MIPI_DATA	CLK_MIPI	*	MIPI_2CLK
CLK_MIPI	*	*	MIPICLK_2OTHER

Memory Bus Constraints

PHYSICAL_RULE_SET	LAYER	ALLOW ROUTE ON LAYER?	MINIMUM LINE WIDTH	MINIMUM NECK WIDTH	MAXIMUM NECK LENGTH	DIFFPAIR PRIMARY GAP	DIFFPAIR NECK GAP
S2_MEM_45S	*	=45_OHM_SE	=45_OHM_SE	=45_OHM_SE	=45_OHM_SE	=STANDARD	=STANDARD
S2_MEM_85D	*	=85_OHM_DIFF	=85_OHM_DIFF	=85_OHM_DIFF	=85_OHM_DIFF	=85_OHM_DIFF	=85_OHM_DIFF

Spacing Rule Sets

SPACING_RULE_SET	LAYER	LINE-TO-LINE SPACING	WEIGHT
S2_DATA2SELF	*	=2x_DIELECTRIC	?
S2_DQS2OWNDATA	*	=2x_DIELECTRIC	?
S2_CMD2CMD	*	=2x_DIELECTRIC	?
S2_CMD2CTRL	*	=2x_DIELECTRIC	?
S2_CTRL2CTRL	*	=2x_DIELECTRIC	?
S2_2OTHERMEM	*	=4x_DIELECTRIC	?
S2MEM_2PWR	*	=2x_DIELECTRIC	?
S2MEM_2GND	*	=2x_DIELECTRIC	?
S2MEM_2OTHER	*	=6x_DIELECTRIC	?

SPACING_RULE_SET	LAYER	LINE-TO-LINE SPACING	WEIGHT
S2_DATA2SELF	TOP,BOTTOM	=4x_DIELECTRIC	?
S2_DQS2OWNDATA	TOP,BOTTOM	=4x_DIELECTRIC	?
S2_CMD2CMD	TOP,BOTTOM	=4x_DIELECTRIC	?
S2_CMD2CTRL	TOP,BOTTOM	=4x_DIELECTRIC	?
S2_CTRL2CTRL	TOP,BOTTOM	=4x_DIELECTRIC	?
S2_2OTHERMEM	TOP,BOTTOM	=6x_DIELECTRIC	?
S2MEM_2PWR	TOP,BOTTOM	=4x_DIELECTRIC	?
S2MEM_2GND	TOP,BOTTOM	=4x_DIELECTRIC	?
S2MEM_2OTHER	TOP,BOTTOM	=10x_DIELECTRIC	?

Memory Bus Spacing Group Assignments

NET_SPACING_TYPE1	NET_SPACING_TYPE2	AREA_TYPE	SPACING_RULE_SET
S2_MEM_DATA*	*	*	S2MEM_2OTHER
S2_MEM_DQS*	*	*	S2MEM_2OTHER
S2_MEM_CMD	*	*	S2MEM_2OTHER
S2_MEM_CTRL	*	*	S2MEM_2OTHER
S2_MEM_CLK	*	*	S2MEM_2OTHER
S2_MEM_DATA*	=SAME	*	S2_DATA2SELF
S2_MEM_CMD	S2_MEM_CMD	*	S2_CMD2CMD
S2_MEM_CMD	S2_MEM_CTRL	*	S2_CMD2CTRL
S2_MEM_CTRL	S2_MEM_CTRL	*	S2_CTRL2CTRL
S2_MEM_*	S2_MEM_*	*	S2_2OTHERMEM

NET_SPACING_TYPE1	NET_SPACING_TYPE2	AREA_TYPE	SPACING_RULE_SET
S2_MEM_DQS1	S2_MEM_DATA1	*	S2_DQS2OWNDATA
S2_MEM_DQS0	S2_MEM_DATA0	*	S2_DQS2OWNDATA

Memory to Power Spacing

NET_SPACING_TYPE1	NET_SPACING_TYPE2	AREA_TYPE	SPACING_RULE_SET
S2_MEM_PWR	S2_MEM_*	*	S2MEM_2PWR
S2_MEM_PWR	*	*	DEFAULT

Memory to GND Spacing

NET_SPACING_TYPE1	NET_SPACING_TYPE2	AREA_TYPE	SPACING_RULE_SET
GND	S2_MEM_*	*	S2MEM_2GND

Camera Net Properties

ELECTRICAL_CONSTRAINT_SET	NET_TYPE: PHYSICAL	NET_TYPE: SPACING		
S2_MEM_CLK	S2_MEM_85D	S2_MEM_CLK	MEM_CAM_CLK_P	31 32
S2_MEM_CLK	S2_MEM_85D	S2_MEM_CLK	MEM_CAM_CLK_N	31 32
S2_MEM_CNTL	S2_MEM_45S	S2_MEM_CTRL	MEM_CAM_CKE	31 32
S2_MEM_CNTL	S2_MEM_45S	S2_MEM_CTRL	MEM_CAM_CS_L	31 32
	S2_MEM_45S	S2_MEM_CTRL	MEM_CAM_ODT	32
S2_MEM_CMD	S2_MEM_45S	S2_MEM_CTRL	MEM_CAM_CAS_L	31 32
S2_MEM_CMD	S2_MEM_45S	S2_MEM_CTRL	MEM_CAM_RAS_L	31 32
S2_MEM_CMD	S2_MEM_45S	S2_MEM_CMD	MEM_CAM_WE_L	31 32
S2_MEM_CMD	S2_MEM_45S	S2_MEM_CMD	MEM_CAM_BA<0>	31 32
S2_MEM_CMD	S2_MEM_45S	S2_MEM_CMD	MEM_CAM_BA<1>	31 32
S2_MEM_CMD	S2_MEM_45S	S2_MEM_CMD	MEM_CAM_BA<2>	31 32
S2_MEM_DQS0	S2_MEM_85D	S2_MEM_DQS0	MEM_CAM_DQS_P<0>	31 32
S2_MEM_DQS0	S2_MEM_85D	S2_MEM_DQS0	MEM_CAM_DQS_N<0>	31 32
S2_MEM_DQS1	S2_MEM_85D	S2_MEM_DQS1	MEM_CAM_DQS_P<1>	31 32
S2_MEM_DQS1	S2_MEM_85D	S2_MEM_DQS1	MEM_CAM_DQS_N<1>	31 32
S2_MEM_DATA_0	S2_MEM_45S	S2_MEM_DATA0	MEM_CAM_DM<0>	31 32
S2_MEM_DATA_1	S2_MEM_45S	S2_MEM_DATA1	MEM_CAM_DM<1>	31 32
S2_MEM_A	S2_MEM_45S	S2_MEM_CMD	MEM_CAM_A<14..0>	31 32
S2_MEM_DATA_0	S2_MEM_45S	S2_MEM_DATA0	MEM_CAM_DQ<7..0>	31 32
S2_MEM_DATA_1	S2_MEM_45S	S2_MEM_DATA1	MEM_CAM_DQ<15..8>	31 32
MIPI_DATA_S2	MIPI_85D	MIPI_DATA	MIPI_DATA_P	31 32
MIPI_DATA_S2	MIPI_85D	MIPI_DATA	MIPI_DATA_N	31 32
	MIPI_85D	MIPI_DATA	MIPI_DATA_CONN_P	32 64
	MIPI_85D	MIPI_DATA	MIPI_DATA_CONN_N	32 64
MIPI_CLK_S2	MIPI_85D	CLK_MIPI	MIPI_CLK_P	31 32
MIPI_CLK_S2	MIPI_85D	CLK_MIPI	MIPI_CLK_N	31 32
	MIPI_85D	CLK_MIPI	MIPI_CLK_CONN_P	32 64
	MIPI_85D	CLK_MIPI	MIPI_CLK_CONN_N	32 64
		S2_MEM_PWR	PP1V35_CAM	31 32
		S2_MEM_PWR	PP0V675_CAM_VREF	31 32
		S2_MEM_PWR	PP0V675_MEM_CAM_VREFCA	32
		S2_MEM_PWR	PP0V675_MEM_CAM_VREFDQ	32

SYNC_MASTER=J41_MLB SYNC_DATE=01/30/2013

PAGE TITLE: Camera Constraints

Apple Inc.

DRAWING NUMBER: <SCH_NUM> SIZE: D

REVISION: <E4LABEL>

BRANCH: <BRANCH>

PAGE: 116 OF 121

SHEET: 72 OF 76

NOTICE OF PROPRIETARY PROPERTY:
THE INFORMATION CONTAINED HEREIN IS THE PROPRIETARY PROPERTY OF APPLE INC.
THE POSESSOR AGREES TO THE FOLLOWING:
I TO MAINTAIN THIS DOCUMENT IN CONFIDENCE
II NOT TO REPRODUCE OR COPY IT
III NOT TO REVEAL OR PUBLISH IT IN WHOLE OR PART
IV ALL RIGHTS RESERVED

WWW.AliSaler.Com

PHYSICAL_RULE_SET	LAYER	ALLOW ROUTE ON LAYER?	MINIMUM LINE WIDTH	MINIMUM NECK WIDTH	MAXIMUM NECK LENGTH	DIFFPAIR PRIMARY GAP	DIFFPAIR NECK GAP
1TO1_DIFFPAIR	*	=STANDARD	=STANDARD	=STANDARD	=STANDARD	0.1 MM	0.1 MM
2TO1_DIFFPAIR	*	=STANDARD	0.2 MM	0.1 MM	=STANDARD	0.1 MM	0.1 MM

SMC SMBus Net Properties

ELECTRICAL_CONSTRAINT_SET	NET_TYPE PHYSICAL	NET_TYPE SPACING		
SMBUS_SMC_0_S0_SCL	SMB_45S_R_50S	SMB	SMBUS_SMC_0_S0_SCL	37 40 60
SMBUS_SMC_0_S0_SDA	SMB_45S_R_50S	SMB	SMBUS_SMC_0_S0_SDA	37 40 60
SMBUS_SMC_1_S0_SCL	SMB_45S_R_50S	SMB	SMBUS_SMC_1_S0_SCL	14 32 37 40 43 44 64 69
SMBUS_SMC_1_S0_SDA	SMB_45S_R_50S	SMB	SMBUS_SMC_1_S0_SDA	14 32 37 40 43 44 64 69
SMBUS_SMC_2_S3_SCL	SMB_45S_R_50S	SMB	SMBUS_SMC_2_S3_SCL	37 40 61 65
SMBUS_SMC_2_S3_SDA	SMB_45S_R_50S	SMB	SMBUS_SMC_2_S3_SDA	37 40 61 65
SMBUS_SMC_3_SCL	SMB_45S_R_50S	SMB	SMBUS_SMC_3_SCL	36 37 40 44 64
SMBUS_SMC_3_SDA	SMB_45S_R_50S	SMB	SMBUS_SMC_3_SDA	36 37 40 44 64
SMBUS_SMC_5_G3_SCL	SMB_45S_R_50S	SMB	SMBUS_SMC_5_G3_SCL	37 40 48 50 64
SMBUS_SMC_5_G3_SDA	SMB_45S_R_50S	SMB	SMBUS_SMC_5_G3_SDA	37 40 48 50 64

SMBus Charger Net Properties

ELECTRICAL_CONSTRAINT_SET	NET_TYPE PHYSICAL	NET_TYPE SPACING		
SENSE_DIFFPAIR			CHGR_CSI_P	50
SENSE_DIFFPAIR	2TO1_DIFFPAIR		CHGR_CSI_N	50
	2TO1_DIFFPAIR		CHGR_CSI_R_P	50
	2TO1_DIFFPAIR		CHGR_CSI_R_N	50
SENSE_DIFFPAIR	2TO1_DIFFPAIR		CHGR_CSO_P	50
SENSE_DIFFPAIR	2TO1_DIFFPAIR		CHGR_CSO_N	50
	2TO1_DIFFPAIR		CHGR_CSO_R_P	43 50
	2TO1_DIFFPAIR		CHGR_CSO_R_N	43 50

SYNC_MASTER=CONSTRAINTS SYNC_DATE=09/25/2012

PAGE TITLE
SMC Constraints

Apple Inc.

DRAWING NUMBER <SCH_NUM> SIZE D

REVISION <E4LABEL>

BRANCH <BRANCH>

PAGE 117 OF 121

SHEET 73 OF 76

NOTICE OF PROPRIETARY PROPERTY:
THE INFORMATION CONTAINED HEREIN IS THE PROPRIETARY PROPERTY OF APPLE INC.
THE POSESSOR AGREES TO THE FOLLOWING:
I TO MAINTAIN THIS DOCUMENT IN CONFIDENCE
II NOT TO REPRODUCE OR COPY IT
III NOT TO REVEAL OR PUBLISH IT IN WHOLE OR PART
IV ALL RIGHTS RESERVED

WWW.AliSaler.Com

PHYSICAL_RULE_SET	LAYER	ALLOW ROUTE ON LAYER?	MINIMUM LINE WIDTH	MINIMUM NECK WIDTH	MAXIMUM NECK LENGTH	DIFFPAIR PRIMARY GAP	DIFFPAIR NECK GAP
SENSE_1TO1_45S	*	=1TO1_DIFFPAIR	=45_OHM_SE	=45_OHM_SE	=45_OHM_SE	=1TO1_DIFFPAIR	=1TO1_DIFFPAIR
SENSE_1TO1_P2MM	*	=1TO1_DIFFPAIR	0.200 MM	0.100 MM	=1TO1_DIFFPAIR	=1TO1_DIFFPAIR	=1TO1_DIFFPAIR
THERM_1TO1_45S	*	=1TO1_DIFFPAIR	=45_OHM_SE	=45_OHM_SE	=45_OHM_SE	=1TO1_DIFFPAIR	=1TO1_DIFFPAIR
SPKR_DIFFPAIR	*	=1TO1_DIFFPAIR	0.300 MM	0.100 MM	=1TO1_DIFFPAIR	=1TO1_DIFFPAIR	=1TO1_DIFFPAIR

SPACING_RULE_SET	LAYER	LINE-TO-LINE SPACING	WEIGHT
SENSE	*	=2:1_SPACING	?
THERM	*	=2:1_SPACING	?
AUDIO	*	=2:1_SPACING	?

NET_SPACING_TYPE1	NET_SPACING_TYPE2	AREA_TYPE	SPACING_RULE_SET
CPU_COMP	GND	*	GND_P2MM
CPU_VCCSENSE	GND	*	GND_P2MM

SPACING_RULE_SET	LAYER	LINE-TO-LINE SPACING	WEIGHT
GND	*	=STANDARD	?

SPACING_RULE_SET	LAYER	LINE-TO-LINE SPACING	WEIGHT
GND_P2MM	*	0.20 MM	10000
PWR_P2MM	*	0.20 MM	10000

NET_SPACING_TYPE1	NET_SPACING_TYPE2	AREA_TYPE	SPACING_RULE_SET
GND	CLK_PCIE	*	GND_P2MM
GND	PCIE*	*	GND_P2MM
GND	SATA*	*	GND_P2MM
GND	USB*	*	GND_P2MM
GND	LVDS*	*	GND_P2MM
SB_POWER	CLK_PCIE	*	PWR_P2MM
SB_POWER	SATA*	*	PWR_P2MM
SB_POWER	SATA*	*	PWR_P2MM

J11/J13 Specific Net Properties

ELECTRICAL_CONSTRAINT_SET	NET_TYPE PHYSICAL	NET_TYPE SPACING		
SENSE_DIFFPAIR	THERM_1TO1_45S	THERM	INLET_THMSNS_D1_P	44
SENSE_DIFFPAIR	THERM_1TO1_45S	THERM	INLET_THMSNS_D1_N	44
SENSE_DIFFPAIR	THERM_1TO1_45S	THERM	TBTTHMSNS_D2_R_P	44
SENSE_DIFFPAIR	THERM_1TO1_45S	THERM	TBTTHMSNS_D2_R_N	44
SENSE_DIFFPAIR	THERM_1TO1_45S	THERM	TBTTHMSNS_D2_P	
SENSE_DIFFPAIR	THERM_1TO1_45S	THERM	TBTTHMSNS_D2_N	
SENSE_DIFFPAIR	THERM_1TO1_45S	THERM	TBT_MLBBOT_THMSNS_P	44
SENSE_DIFFPAIR	THERM_1TO1_45S	THERM	TBT_MLBBOT_THMSNS_N	44
SENSE_DIFFPAIR	THERM_1TO1_45S	THERM	MLBBOT_THMSNS_D3_P	
SENSE_DIFFPAIR	THERM_1TO1_45S	THERM	MLBBOT_THMSNS_D3_N	
SENSE_DIFFPAIR	SENSE_1TO1_45S	SENSE	TBDTHMSNS_D2_P	44
SENSE_DIFFPAIR	SENSE_1TO1_45S	SENSE	TBDTHMSNS_D2_N	44
SENSE_DIFFPAIR	SENSE_1TO1_45S	SENSE	CPUTHMSNS_D2_P	44
SENSE_DIFFPAIR	SENSE_1TO1_45S	SENSE	CPUTHMSNS_D2_N	44
SENSE_DIFFPAIR	SENSE_1TO1_P2MM	SENSE	CPUVCCIOS0_CS_N	
SENSE_DIFFPAIR	SENSE_1TO1_P2MM	SENSE	CPUVCCIOS0_CS_P	
SENSE_DIFFPAIR	SENSE_1TO1_P2MM	SENSE	CPUVR_ISNS1_P	42 52
SENSE_DIFFPAIR	SENSE_1TO1_P2MM	SENSE	CPUVR_ISNS1_N	42 52
SENSE_DIFFPAIR	SENSE_1TO1_45S	SENSE	CPUVR_ISNS2_P	42 52
SENSE_DIFFPAIR	SENSE_1TO1_45S	SENSE	CPUVR_ISNS2_N	42 52
	SENSE_1TO1_P2MM	SENSE	CPUVR_ISNS1_P_R	42 43
	SENSE_1TO1_P2MM	SENSE	CPUVR_ISNS1_N_R	42 43
	SENSE_1TO1_45S	SENSE	CPUVR_ISUM_R_P	42
	SENSE_1TO1_45S	SENSE	CPUVR_ISUM_R_N	42
SENSE_DIFFPAIR	SENSE_1TO1_P2MM	SENSE	ISNS_CPUDDR_P	42
SENSE_DIFFPAIR	SENSE_1TO1_P2MM	SENSE	ISNS_CPUDDR_N	42
SENSE_DIFFPAIR	SENSE_1TO1_45S	SENSE	ISNS_P3V3S5_N	42
SENSE_DIFFPAIR	SENSE_1TO1_45S	SENSE	ISNS_P3V3S5_P	42
SENSE_DIFFPAIR	SENSE_1TO1_45S	SENSE	ISNS_3V3_S0_P	
SENSE_DIFFPAIR	SENSE_1TO1_45S	SENSE	ISNS_3V3_S0_N	
SENSE_DIFFPAIR	SENSE_1TO1_45S	SENSE	ISNS_CAMERA_P	41
SENSE_DIFFPAIR	SENSE_1TO1_45S	SENSE	ISNS_CAMERA_N	41
SENSE_DIFFPAIR	SENSE_1TO1_45S	SENSE	ISNS_P3V3_S0_N	41
SENSE_DIFFPAIR	SENSE_1TO1_45S	SENSE	ISNS_P3V3_S0_P	41
SENSE_DIFFPAIR	SENSE_1TO1_P2MM	SENSE	ISNS_1V05_S0_P	42 55
SENSE_DIFFPAIR	SENSE_1TO1_P2MM	SENSE	ISNS_1V05_S0_N	42 55
SENSE_DIFFPAIR	SENSE_1TO1_45S	SENSE	ISNS_BMON_GAIN_P	
SENSE_DIFFPAIR	SENSE_1TO1_45S	SENSE	ISNS_BMON_GAIN_N	
SENSE_DIFFPAIR	SENSE_1TO1_45S	SENSE	ISNS_HS_COMPUTING_N	41 43
SENSE_DIFFPAIR	SENSE_1TO1_45S	SENSE	ISNS_HS_COMPUTING_P	41 43
SENSE_DIFFPAIR	SENSE_1TO1_45S	SENSE	ISNS_HS_OTHER_N	41
SENSE_DIFFPAIR	SENSE_1TO1_45S	SENSE	ISNS_HS_OTHER_P	41
SENSE_DIFFPAIR	SENSE_1TO1_45S	SENSE	ISNS_1V2_S3_N	41 53
SENSE_DIFFPAIR	SENSE_1TO1_45S	SENSE	ISNS_1V2_S3_P	41 53
SENSE_DIFFPAIR	SENSE_1TO1_45S	SENSE	ISNS_AIRPORT_N	41
SENSE_DIFFPAIR	SENSE_1TO1_45S	SENSE	ISNS_AIRPORT_P	41
SENSE_DIFFPAIR	SENSE_1TO1_45S	SENSE	ISNS_SSD_N	41
SENSE_DIFFPAIR	SENSE_1TO1_45S	SENSE	ISNS_SSD_P	41
SENSE_DIFFPAIR	SENSE_1TO1_45S	SENSE	ISNS_LCDBKLT_N	41
SENSE_DIFFPAIR	SENSE_1TO1_45S	SENSE	ISNS_LCDBKLT_P	41
SENSE_DIFFPAIR	SENSE_1TO1_45S	SENSE	ISNS_PANEL_N	43
SENSE_DIFFPAIR	SENSE_1TO1_45S	SENSE	ISNS_PANEL_P	43
SENSE_DIFFPAIR	SENSE_1TO1_45S	SENSE	ISNS_HS_GAIN_N	43 44
SENSE_DIFFPAIR	SENSE_1TO1_45S	SENSE	ISNS_HS_GAIN_P	43 44
AUD_DIFF	1TO1_DIFFPAIR	AUDIO	SPKRAMP_INR_P	47 61 65
AUD_DIFF	1TO1_DIFFPAIR	AUDIO	SPKRAMP_INR_N	47 61 65
	1TO1_DIFFPAIR	AUDIO	MAX98300_R_P	47
	1TO1_DIFFPAIR	AUDIO	MAX98300_R_N	47
SPKR_OUT	SPKR_DIFFPAIR	AUDIO	SPKRAMP_ROUT_P	47 64
SPKR_OUT	SPKR_DIFFPAIR	AUDIO	SPKRAMP_ROUT_N	47 64
		SB_POWER	PP3V3_S5	8 11 13 15 16 17 18 28 29 34 42 57 58 59 60 62 64 52 64 65
		SB_POWER	PP3V3_S0	8 11 12 13 15 17 18 27 30 36 38 39 40 41 42 43 44 45 56 59 61
	GND		GND	

SYNC_MASTER=J41_MLB SYNC_DATE=12/07/2012

PAGE TITLE
Project Specific Constraints

Apple Inc.

DRAWING NUMBER <SCH_NUM> SIZE D

REVISION <E4LABEL>

BRANCH <BRANCH>

PAGE 118 OF 121

SHEET 74 OF 76

NOTICE OF PROPRIETARY PROPERTY:
THE INFORMATION CONTAINED HEREIN IS THE PROPRIETARY PROPERTY OF APPLE INC.
THE POSESSOR AGREES TO THE FOLLOWING:
I TO MAINTAIN THIS DOCUMENT IN CONFIDENCE
II NOT TO REPRODUCE OR COPY IT
III NOT TO REVEAL OR PUBLISH IT IN WHOLE OR PART
IV ALL RIGHTS RESERVED

WWW.AliSaler.Com

PHYSICAL_RULE_SET	LAYER	ALLOW ROUTE ON LAYER?	MINIMUM LINE WIDTH	MINIMUM NECK WIDTH	MAXIMUM NECK LENGTH	DIFFPAIR PRIMARY GAP	DIFFPAIR NECK GAP
SD_45SE	*	=45_OHM_SE	=45_OHM_SE	=45_OHM_SE	=45_OHM_SE		

SD Card Net Properties

ELECTRICAL_CONSTRAINT_SET	NET_TYPE PHYSICAL	NET_TYPE SPACING		
L347 SDDATA	SD_45SE		SDCONN_DATA<0..3>	33 34
L346 SDCLK	SD_45SE		SDCONN_CLK	33 34
L348	SD_45SE		SDCONN_WP	33 34
L349	SD_45SE		SDCONN_CMD	33 34
L350	SD_45SE		SDCONN_DETECT_L	33 34
L351	SD_45SE	SPI	SD_SPI_CLK	34
L352	SD_45SE	SPI	SD_SPI_CS_L	34
L353	SD_45SE	SPI	SD_SPI_MOSI	34
L354	SD_45SE	SPI	SD_SPI_MISO	34
L355	CLK_25M_45S		SDSCLK_CLK_25M_X1	
L356	CLK_25M_45S		SDCLK_CLK25M_X2_R	34 69

SYNC_MASTER=CONSTRAINTS SYNC_DATE=09/25/2012

PAGE TITLE
Project Specific Constraints

Apple Inc.

DRAWING NUMBER <SCH_NUM> SIZE D

REVISION <E4LABEL>

BRANCH <BRANCH>

PAGE 119 OF 121

SHEET 75 OF 76

NOTICE OF PROPRIETARY PROPERTY:
THE INFORMATION CONTAINED HEREIN IS THE PROPRIETARY PROPERTY OF APPLE INC.
THE POSESSOR AGREES TO THE FOLLOWING:
I TO MAINTAIN THIS DOCUMENT IN CONFIDENCE
II NOT TO REPRODUCE OR COPY IT
III NOT TO REVEAL OR PUBLISH IT IN WHOLE OR PART
IV ALL RIGHTS RESERVED

WWW.AliSaler.Com

Change List:
<RDAR://COMPONENT/508934> J43 HW EE SCHEMATIC | PROTO 0
<RDAR://COMPONENT/508937> J43 HW EE SCHEMATIC | PROTO 1
<RDAR://COMPONENT/508941> J43 HW EE SCHEMATIC | EVT
<RDAR://COMPONENT/508945> J43 HW EE SCHEMATIC | DVT

Kismet:
afp://kismet.apple.com/Kismet-Projects/J41-J43

Useful Wiki Links:
Schematic Conventions - https://hmts.ecs.apple.com/wiki/index.php/User:Wferry/SchConventions
Schematic Design Wiki - https://hmts.ecs.apple.com/wiki/index.php/Schematic_Design

MobileMac HW Radar:
<rdar://component/497591> MobileMac HW | Task
<rdar://component/497587> MobileMac HW | Schematic
<rdar://component/497585> MobileMac HW | New Bugs
<rdar://component/497588> MobileMac HW | Layout
<rdar://component/497590> MobileMac HW | Investigation
<rdar://component/497589> MobileMac HW | Architecture

Other Info:
Page Allocations - <rdar://problem/11791318> 2012 Schematic Page Allocations

SYNC_MASTER=J41_MLB SYNC_DATE=07/03/2012
PAGE TITLE: Reference
Apple Inc.
DRAWING NUMBER: <SCH_NUM> SIZE: D
REVISION: <E4LABEL>
BRANCH: <BRANCH>
PAGE: 121 OF 121
SHEET: 76 OF 76

NOTICE OF PROPRIETARY PROPERTY:
THE INFORMATION CONTAINED HEREIN IS THE PROPRIETARY PROPERTY OF APPLE INC.
THE POSESSOR AGREES TO THE FOLLOWING:
I TO MAINTAIN THIS DOCUMENT IN CONFIDENCE
II NOT TO REPRODUCE OR COPY IT
III NOT TO REVEAL OR PUBLISH IT IN WHOLE OR PART
IV ALL RIGHTS RESERVED

WWW.AliSaler.Com