ARES/ARTEMIS Block Diagram

SI - PHASE

PCB STACK UP

- LAYER 1 : TOP
- LAYER 2 : SGND1
- LAYER 3 : IN1
- LAYER 4 : IN2
- LAYER 5 : VCC
- LAYER 6 : IN3
- LAYER 7 : SGND2
- LAYER 8 : BOT

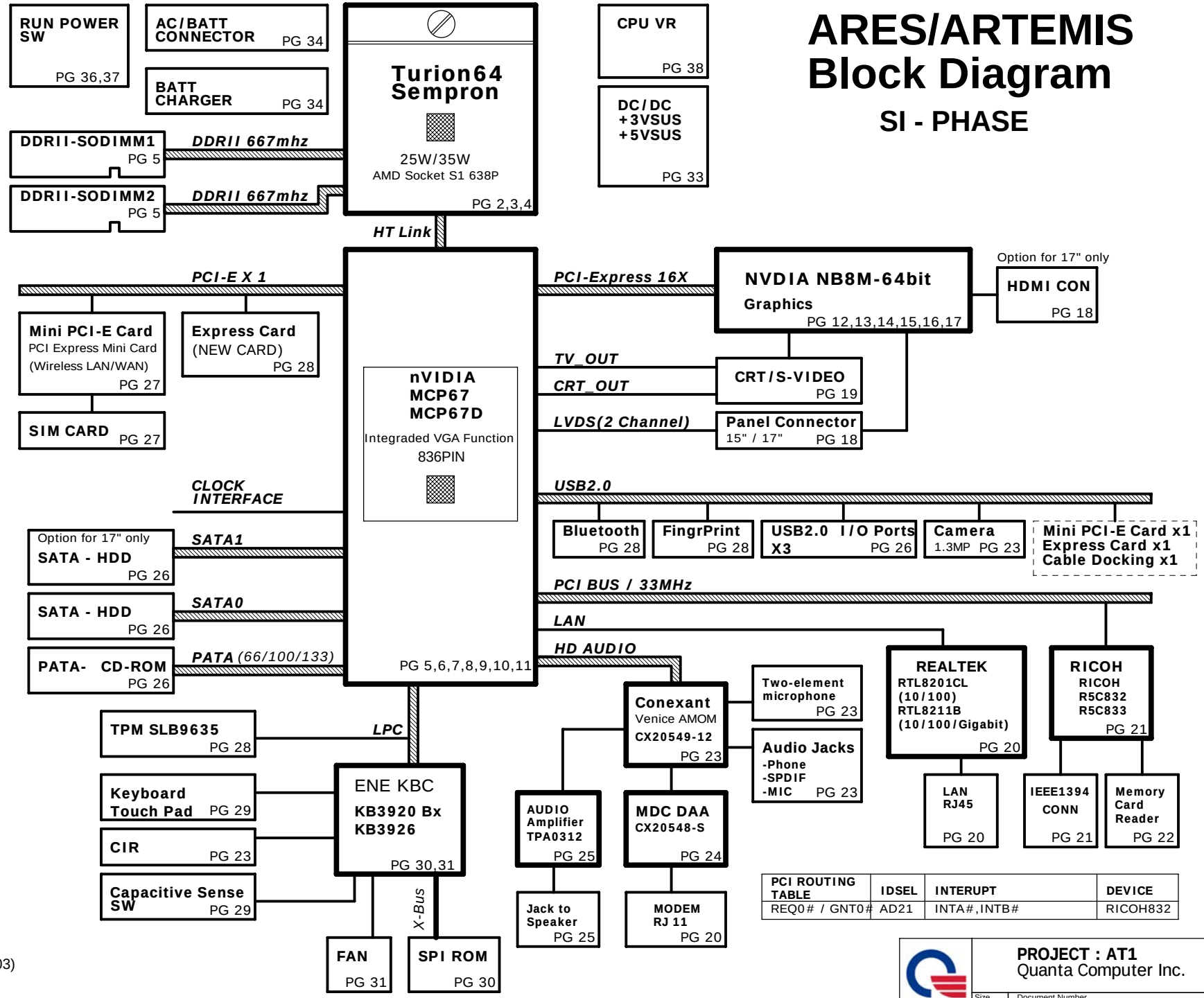

PCI ROUTING TABLE	IDSEL	INTERUPT	DEVICE
REQ0# / GNT0#	AD21	INTA#,INTB#	RICOH832

VAULE DEFINE

A=0603,B=0805,C=1206,F=1%,
OTHER IS 0402
V=Y5V,U=Y5U,R=X5R,S=X6S,
X=X7R,G=COG,O=NPO

EXAMPLE

10R=10ohm(0402)
10A=10ohm(0603)
10B=10ohm(0805)
10C=10ohm(1206)
10/F=10ohm(0402 and 1%)

EXAMPLE

0.1U/16V/R=0.1U/16V/X5R(0402)
0.47UA/10V/X=0.47U/10V/X7R(0603)
10UB/10V/U=10U/10V/Y5U(0805)

NB5/RD2/HW1

PROJECT : AT1
Quanta Computer Inc.

Size	Document Number	Rev
Custom	BLOCK DIAGRAM	C2A

Date: Wednesday, December 20, 2006 Sheet 1 of 40

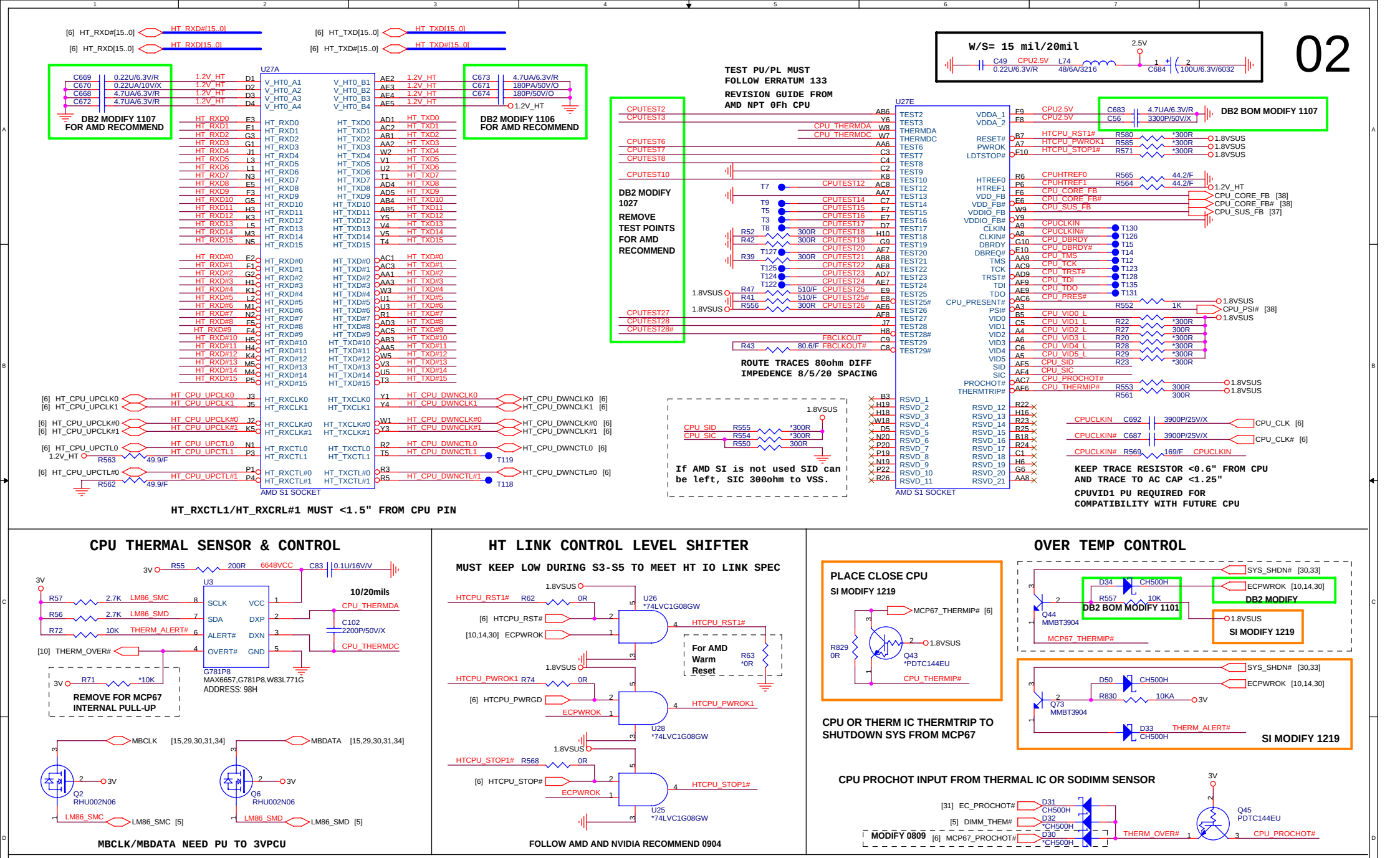

WWW.AliSaler.Com

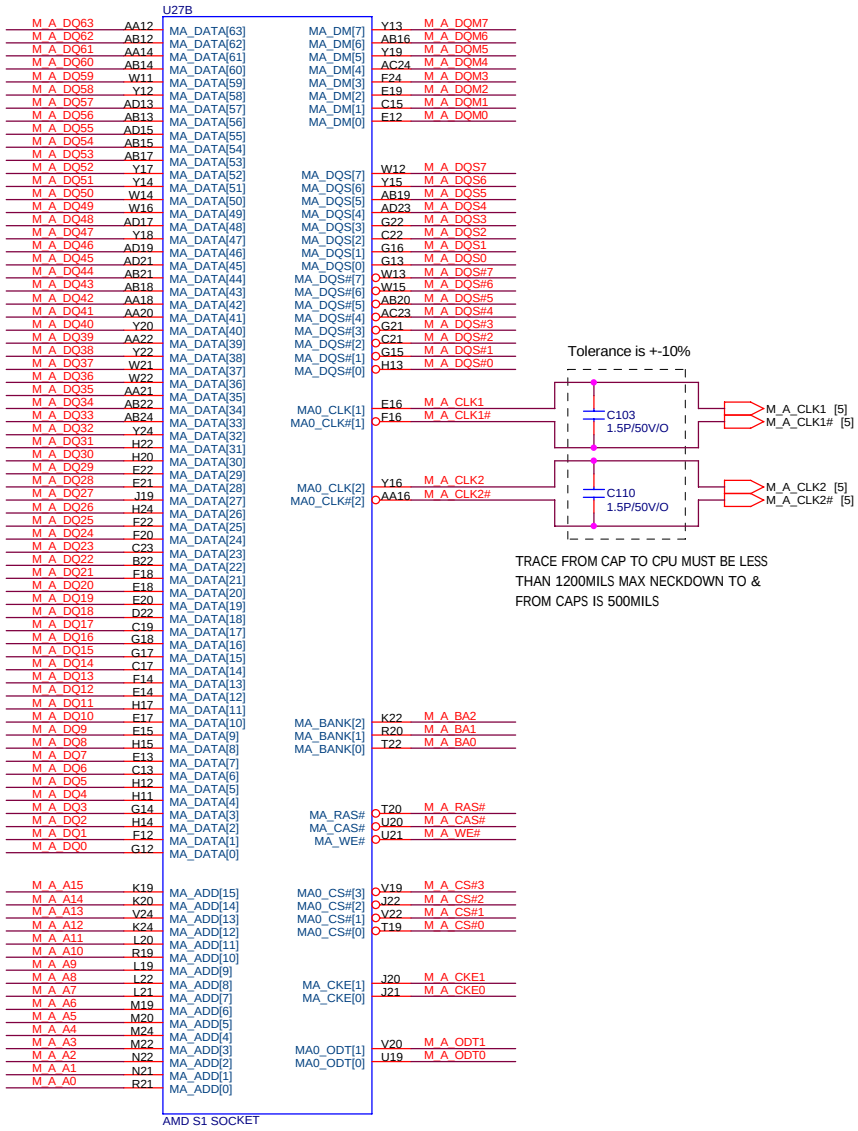

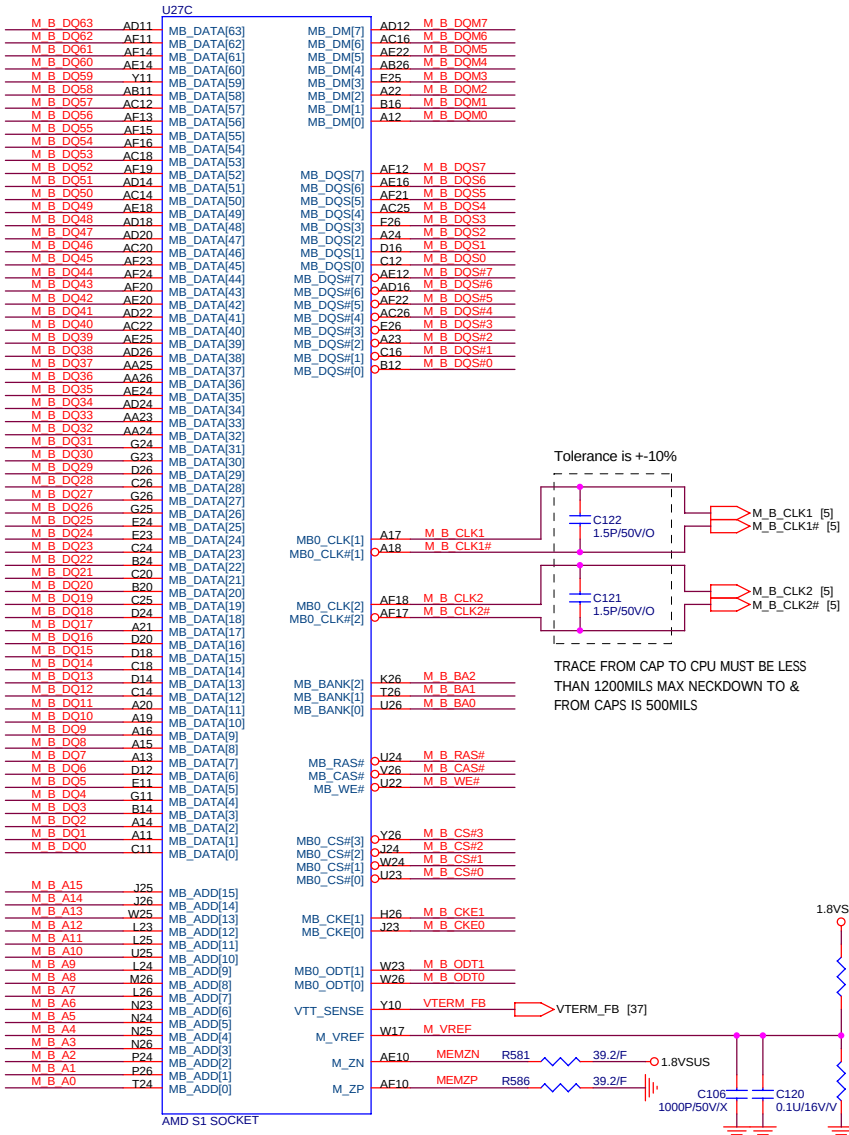

M_VREF : W =20MIL AND SPACE = 20MIL

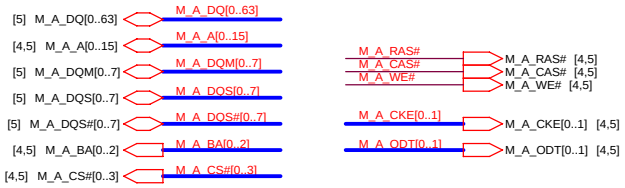

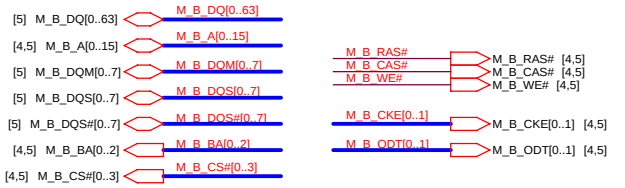

1.8VSUS [2,4,5,6,32,36,37]

NB5/RD2/HW1

PROJECT : AT1
Quanta Computer Inc.

Size	Document Number	Rev
Custom	CPU (MEM_I/F)	C2A

Date: Wednesday, December 20, 2006 Sheet 3 of 40

CPU POWER PLANE AND BY PASS CAP

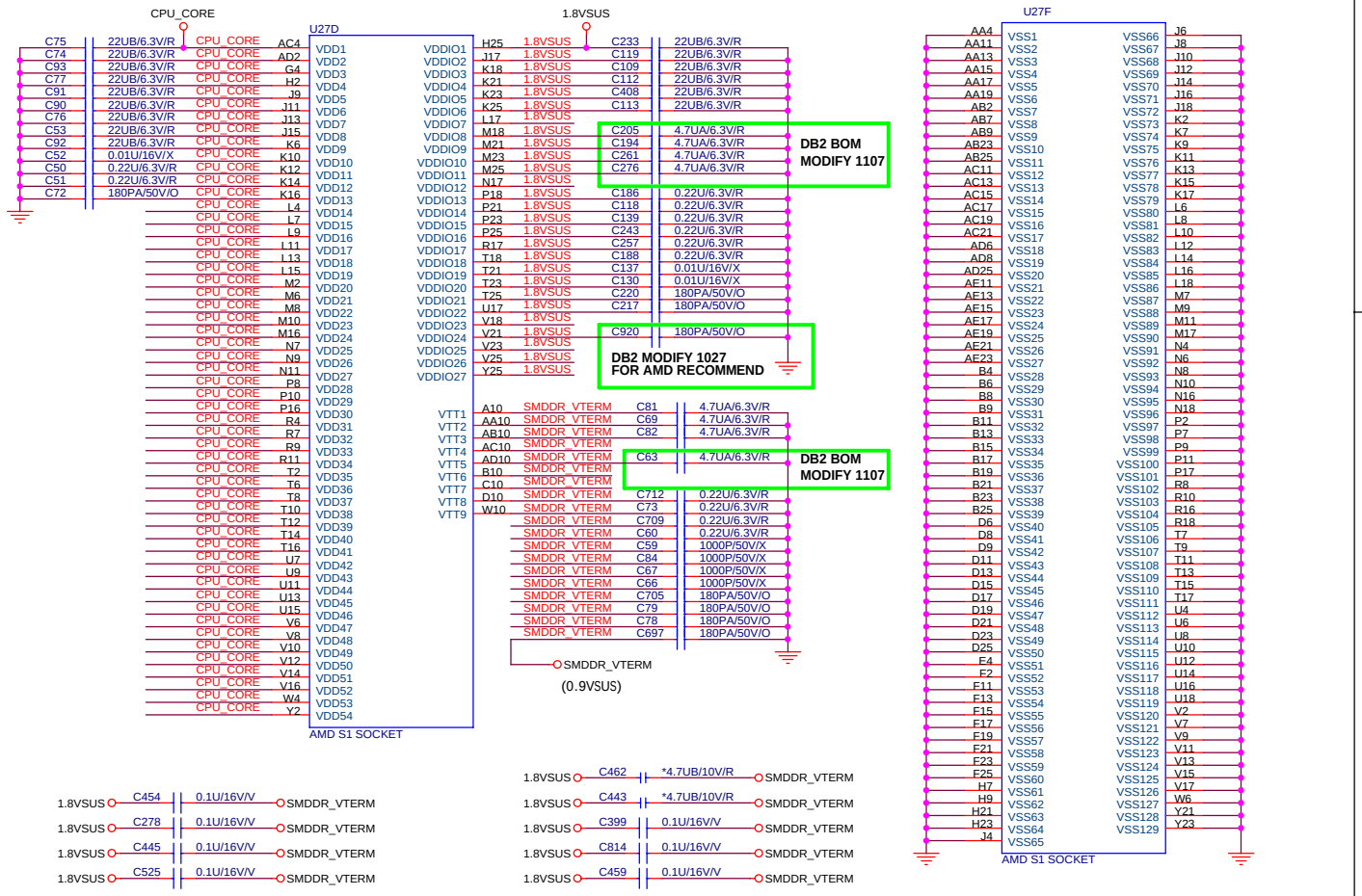

DDR2 TERMINATION BYPASS CAP

04

CHANNEL A

CHANNEL B

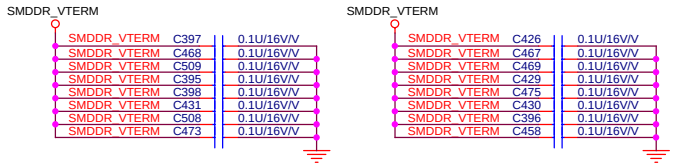

Layout note: Place one cap close to every 2 pullup resistors terminated to SMDDR_VTERM

DDRII CHANNEL B TERMINATION

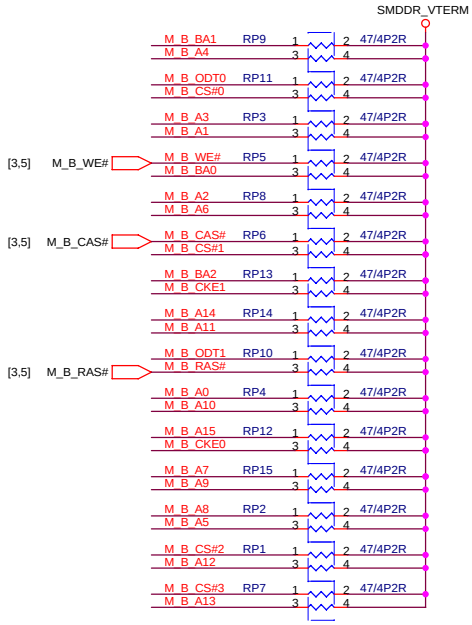

DDRII CHANNEL A TERMINATION

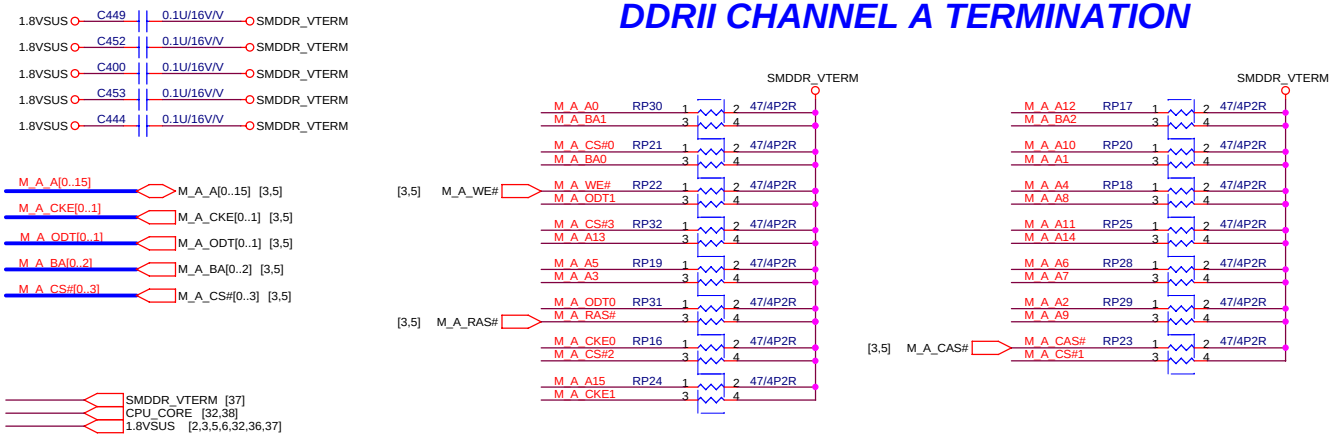

PROJECT : AT1
Quanta Computer Inc.

NB5/RD2/HW1

Size	Document Number	Rev
Custom	CPU (POWER,GND),DDR2_TERM	C2A

Date: Wednesday, December 20, 2006 Sheet 4 of 40

WWW.AliSaler.Com

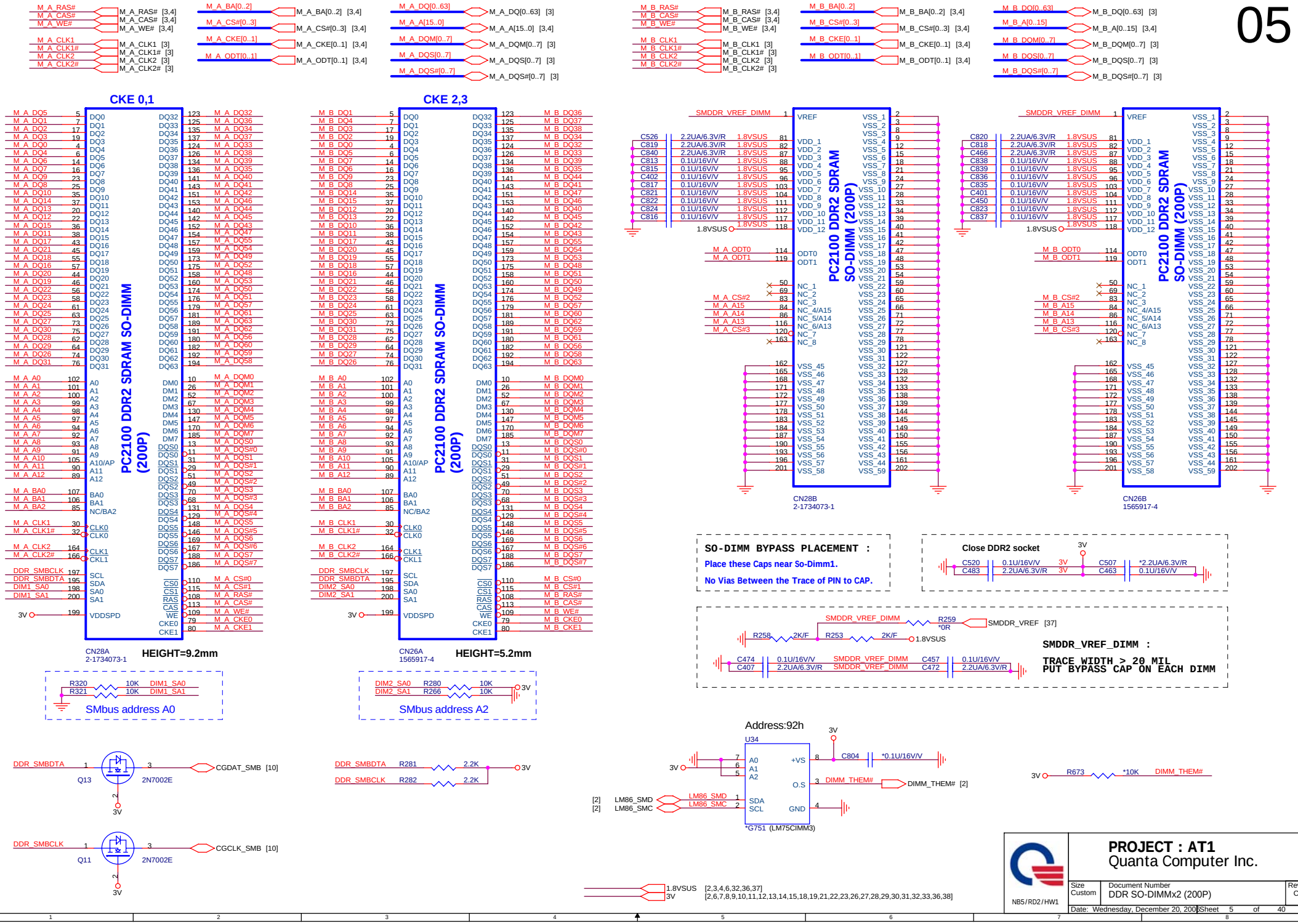

PROJECT : AT1
Quanta Computer Inc.

NB5/RD2/HW1

Size	Document Number	Rev
Custom	DDR SO-DIMMx2 (200P)	C2A

Date: Wednesday, December 20, 2006 Sheet 5 of 40

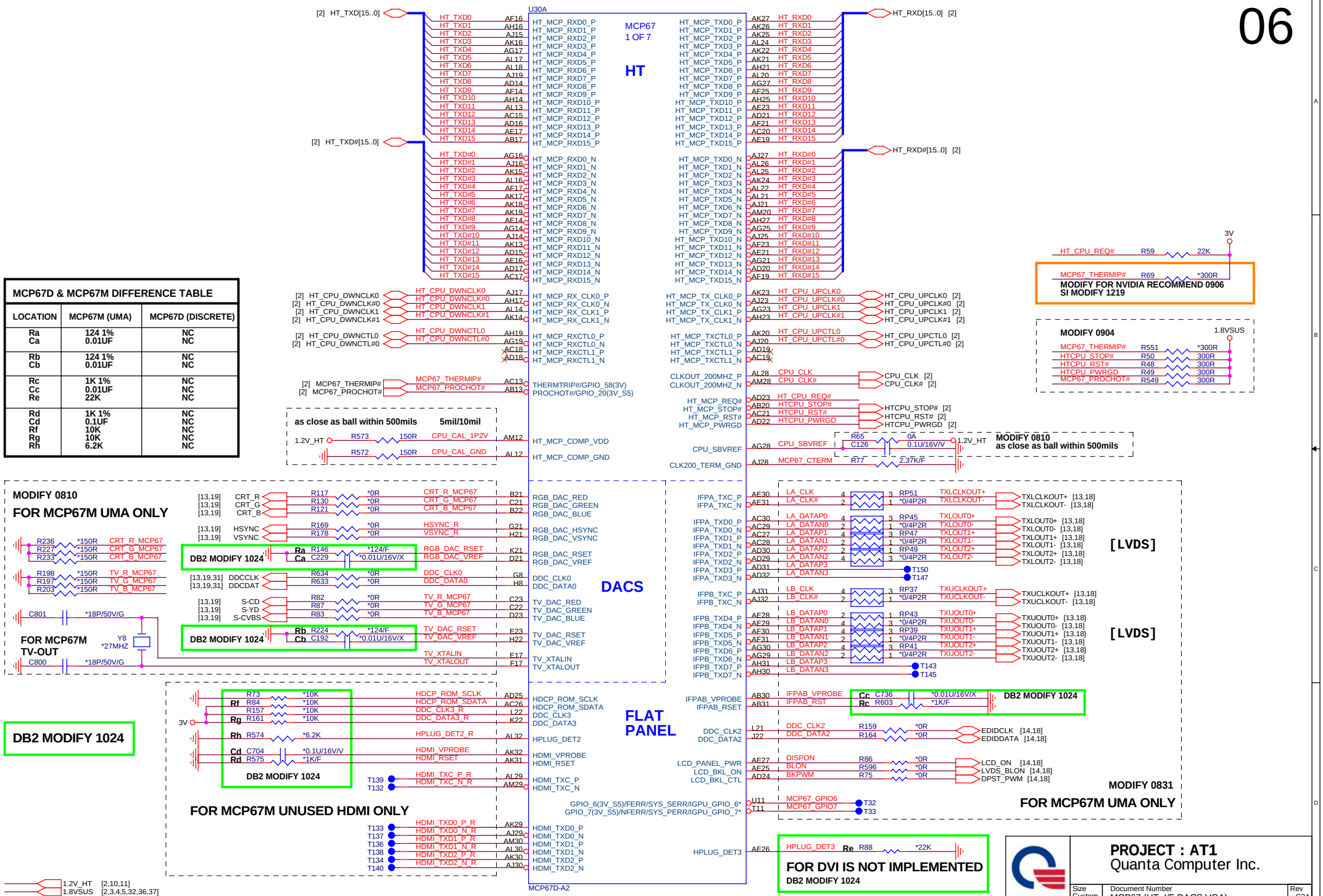

MCP67D & MCP67M DIFFERENCE TABLE

LOCATION	MCP67M (UMA)	MCP67D (DISCRETE)
Ra Ca	124 1% 0.01UF	NC NC
Rb Cb	124 1% 0.01UF	NC NC
Rc Cc Re	1K 1% 0.01UF 22K	NC NC NC
Rd Cd Rf Rg Rh	1K 1% 0.1UF 10K 10K 6.2K	NC NC NC NC NC

WWW.AliSaler.Com

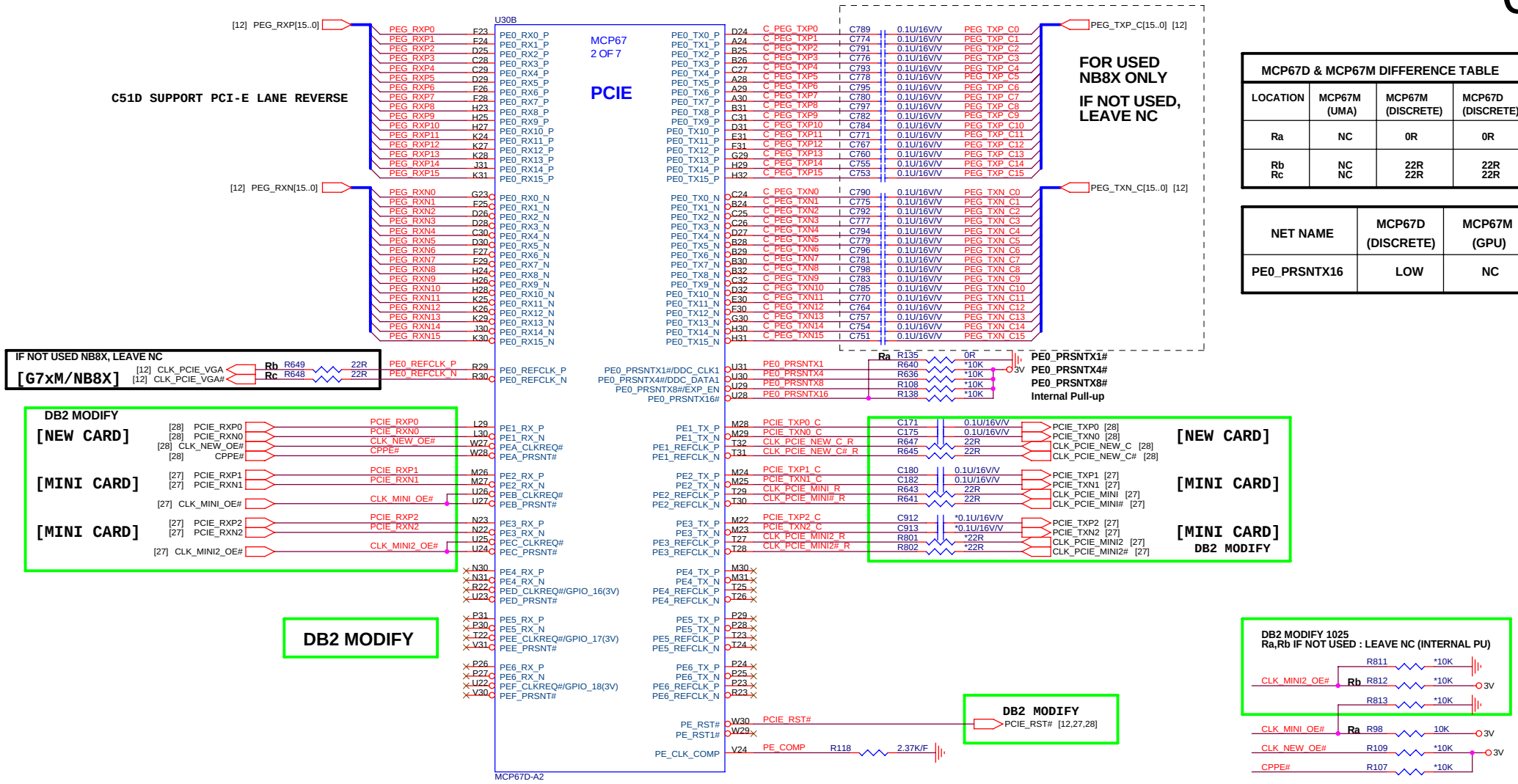

MCP67D & MCP67M DIFFERENCE TABLE			
LOCATION	MCP67M (UMA)	MCP67M (DISCRETE)	MCP67D (DISCRETE)
Ra	NC	0R	0R
Rb Rc	NC NC	22R 22R	22R 22R

NET NAME	MCP67D (DISCRETE)	MCP67M (GPU)
PE0_PRSNTX16	LOW	NC

NB5/RD2/HW1

PROJECT : AT1
Quanta Computer Inc.

Size	Document Number	Rev
Custom	MCP67 (PCI-E_I/F)	C2A

Date: Wednesday, December 20, 2006 Sheet 7 of 40

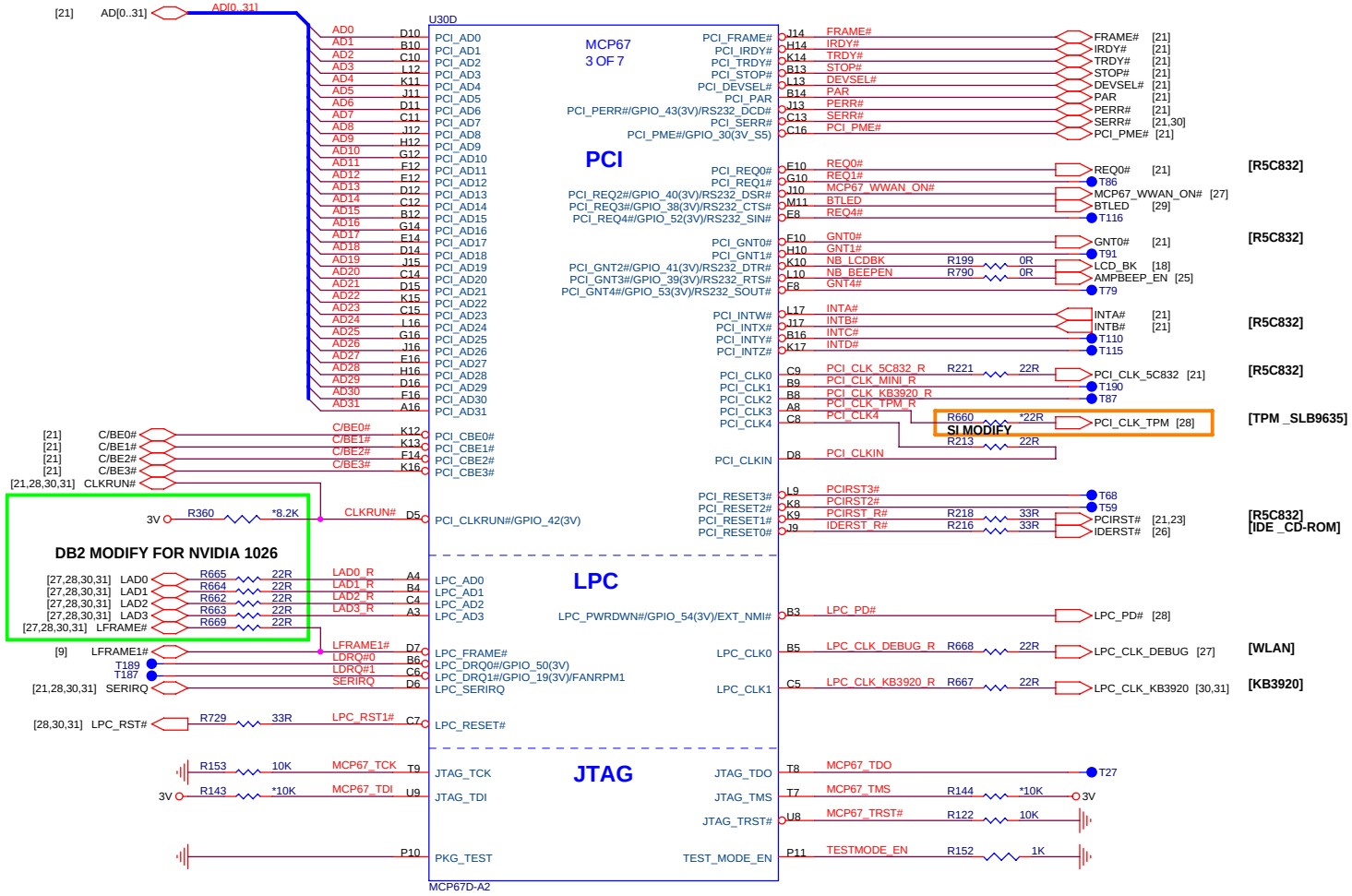

PCI/LPC PULL-UP

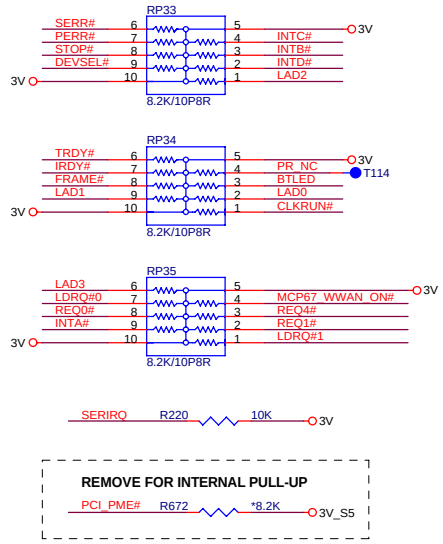

CLOCK BYPASS

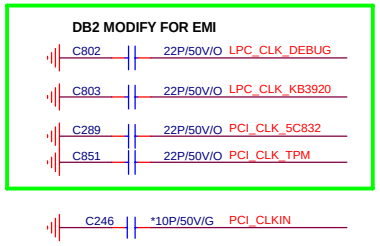

3V [2,5,6,7,9,10,11,12,13,14,15,18,19,21,22,23,26,27,28,29,30,31,32,33,36,38]
3V_S5 [9,10,11,20,28,30,32,33,37]

PROJECT : AT1
Quanta Computer Inc.

Size	Document Number	Rev
Custom	MCP67 (PCI,LPC,JTAG)	C2A

NB5/RD2/HW1

Date: Wednesday, December 20, 2006 Sheet 8 of 40

WWW.AliSaler.Com

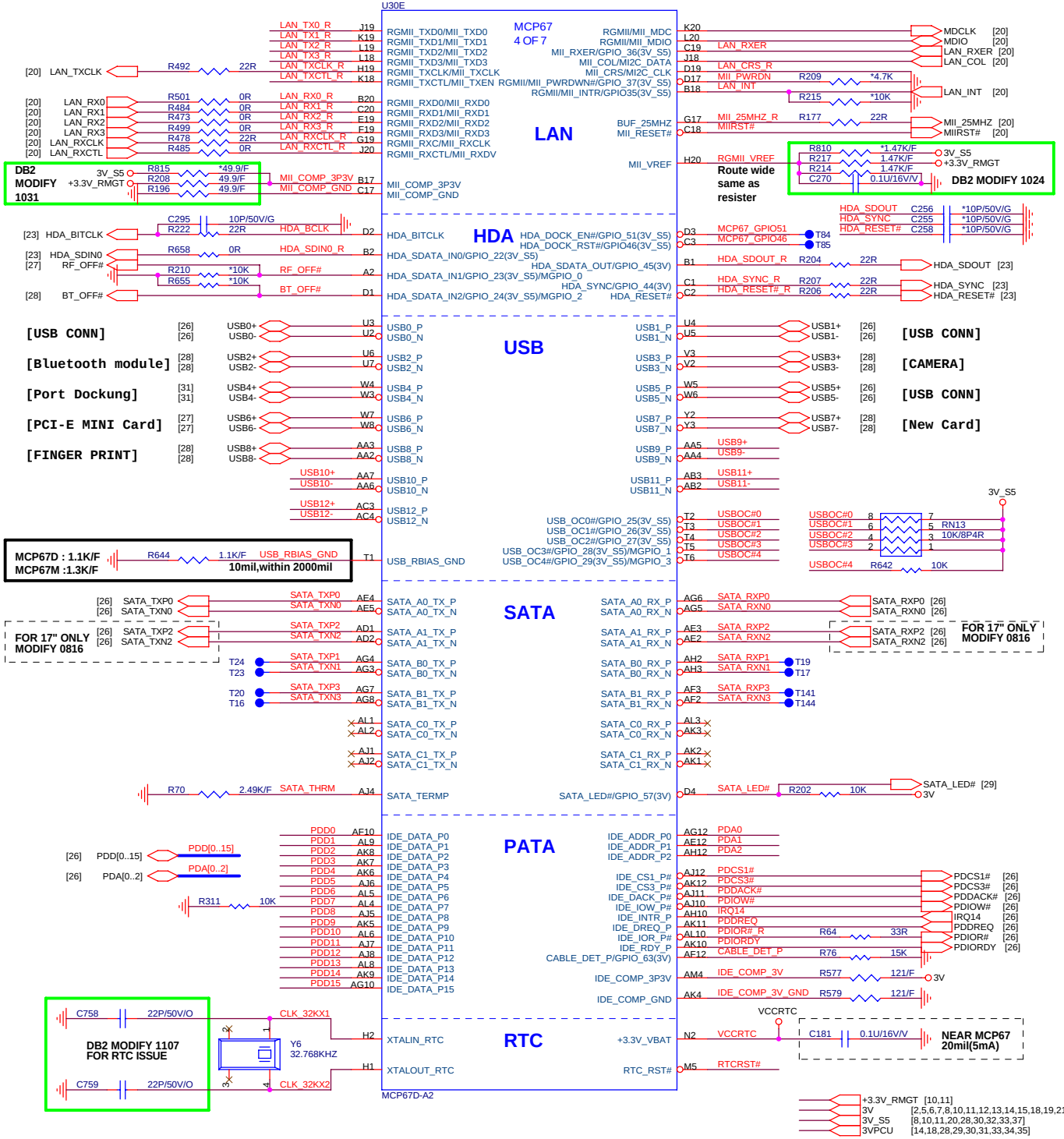

10/100 - GIAG LAN STUFF OPTION

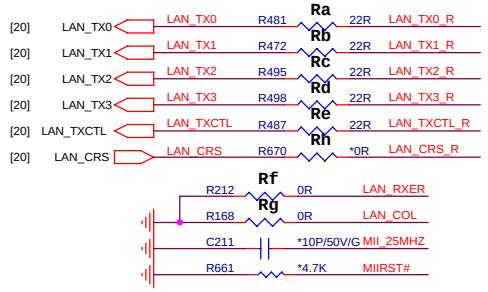

09

MODIFY 0824

	10/100	GIGA
Ra	0R	22R
Rb	0R	22R
Rc	0R	22R
Rd	0R	22R
Re	0R	22R
Rf	NC	0R
Rg	NC	0R
Rh	0R	NC

USB PULL-DOWN

MODIFY 0823

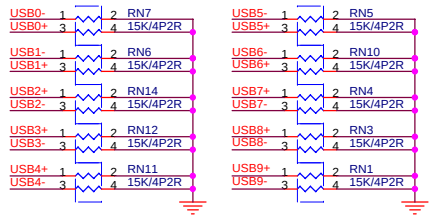

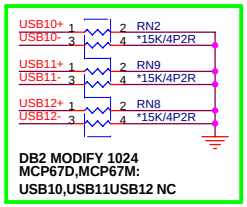

MCP67 STRAPPING

HDA_RESET# (LAN)	
0	MII
1	RGMII (DEFAULT)

HDA_SDOUT_R , LFRAM1# (BIOS)	
00	LPC (DEFAULT)
01	PCI BIOS
10	SPI BIOS
11	RESERVED (SPI)

MCP_SPKR (Boot MODE)	
0	USER TABLE (DEFAULT)
1	SAFE TABLE

HDA_SYNC_R (SIO CLOCK)	
0	14.318MHz (DEFAULT)
1	24MHz

SPI_DO , SPI_CLK (SPI CLOCK)	
00	31MHz
01	42MHz
10	25MHz
11	1MHz

MODIFY 0824

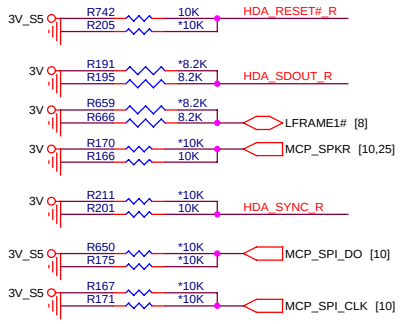

RTC

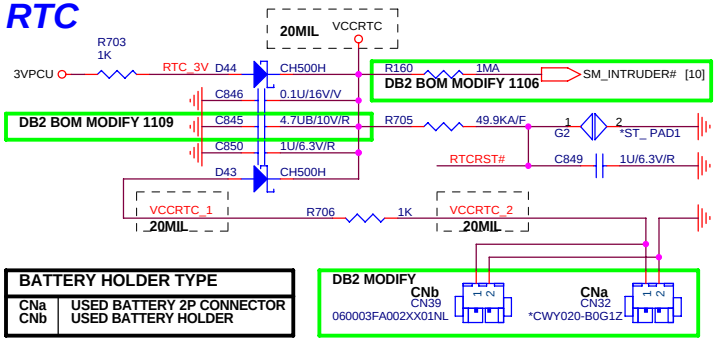

BATTERY HOLDER TYPE	
CNa	USED BATTERY 2P CONNECTOR
CNb	USED BATTERY HOLDER

NB5/RD2/HW1

PROJECT : AT1
Quanta Computer Inc.

Size	Document Number	Rev
Custom	MCP67 (LAN,HDA,USB,ATA,RTC)	C2A

Date: Wednesday, December 20, 2006 Sheet 9 of 40

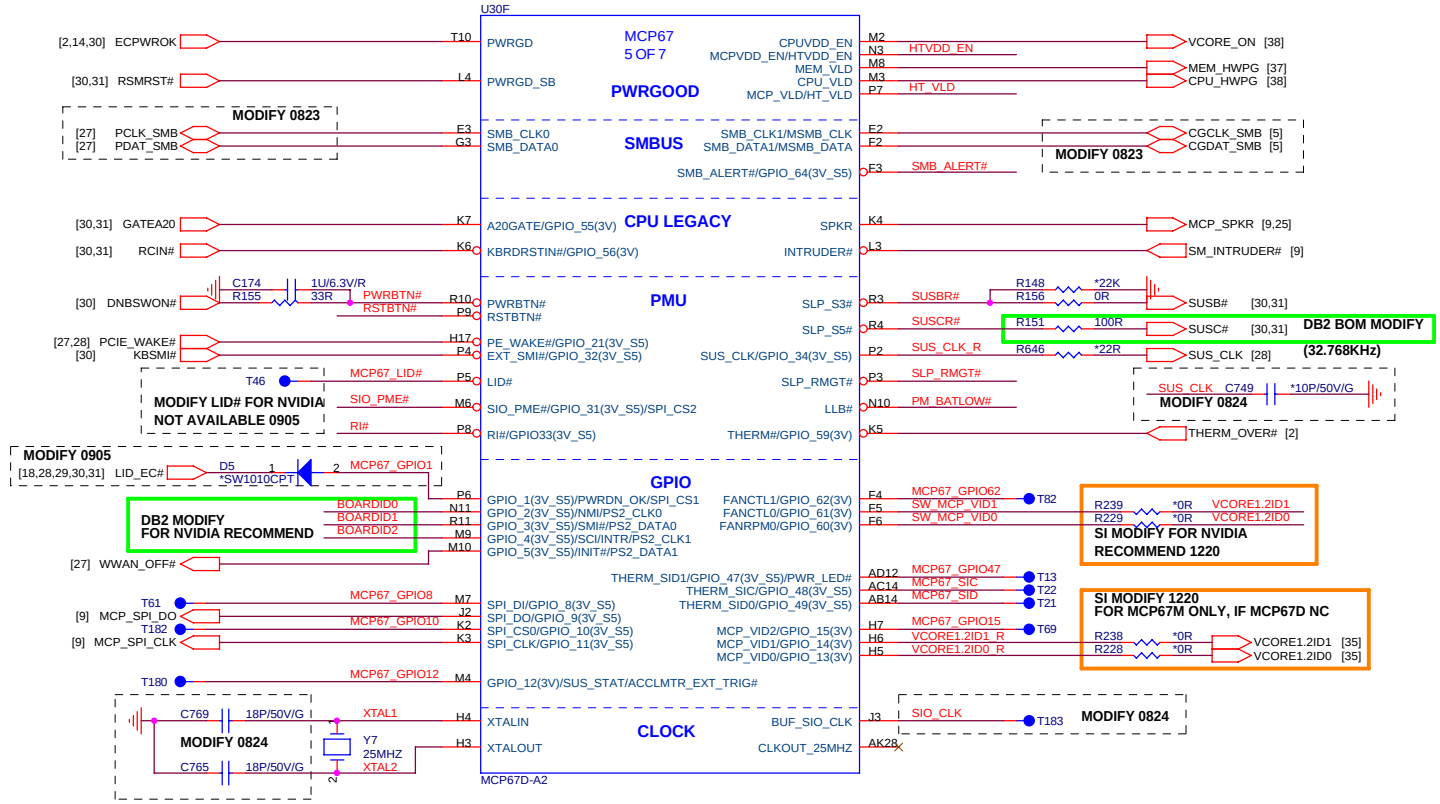

CORE POWER CIRCIUT FOR SLEEP MODE MCP67M SUPPORT ONLY

10

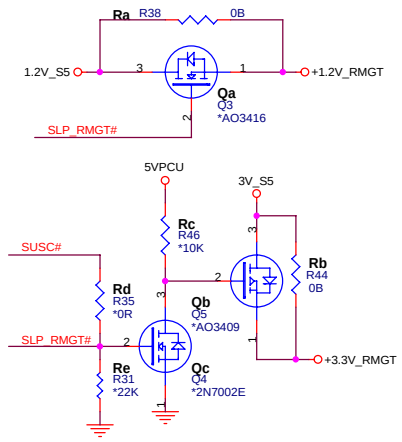

MCP67M & MCP67D DIFFERENCE TABLE		
	MCP67M UMA	MCP67D DISCRETE
Ra	NC	STUFF
Rb	NC	STUFF
Rc	STUFF	NC
Rd	NC	NC
Re	STUFF	NC
Qa	STUFF	NC
Qb	STUFF	NC
Qc	STUFF	NC

PMU PULL-UP

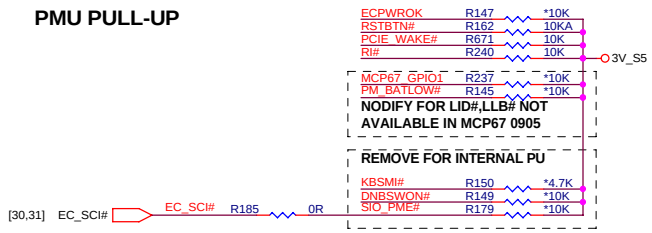

SKU (BOARD ID)	AT1A (DISCRETE)	AT1A (UMA)	AT1B (UMA ONLY)	AT2A (DISCRETE)	AT2A (UMA)
Board ID	X10	X00	X00	X11	X01
ID0 STUFF	Rd1	Rd1	Rd1	Ru1	Ru1
ID1 STUFF	Ru2	Rd2	Rd2	Ru2	Rd2
ID2 STUFF	Rd3				

Board ID :	0/1	0/1	0/1
DIFINE	RESERVE / RESERVE	UMA / DISCRETE	AT1 / AT2

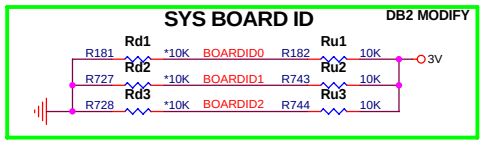

CPU LEGACY PULL-UP

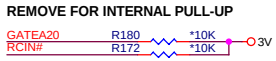

SMB/I2C PULL-UP

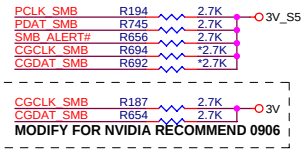

HyperTransport Link 1.2 V_HT Power Valid

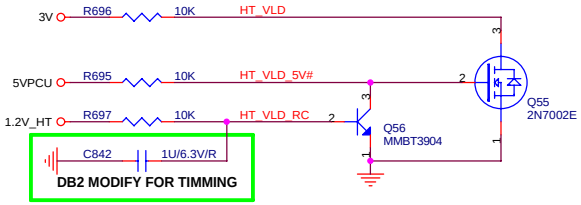

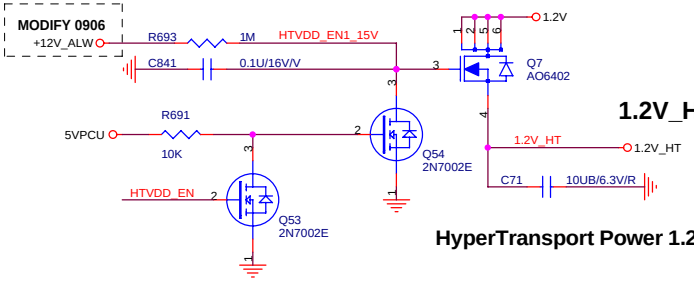

HyperTransport Power 1.2V_HT

+1.2V_RMGT	[11]
1.2V_S5	[11,32,35]
1.2V_HT	[2,6,11]
1.2V	[11,12,13,15,36]
+3.3V_RMGT	[9,11]
3V	[2,5,6,7,8,9,11,12,13,14,15,18,19,21,22,23,26,27,28,29,30,31,32,33,36,38]
3V_S5	[8,9,11,20,28,30,32,33,37]
5VPCU	[23,33,34,35,36,37,38]
+12V_ALW	[18,32,33]

NB5/RD2/HW1

PROJECT : AT1
Quanta Computer Inc.

Size	Document Number	Rev
Custom	MCP67 (PG,SMB,PMU,GPIO,CLK)	C2A

Date: Wednesday, December 20, 2006 Sheet 10 of 40

WWW.AliSaler.Com

MCP67 POWER PLANE/GND & BYPASS

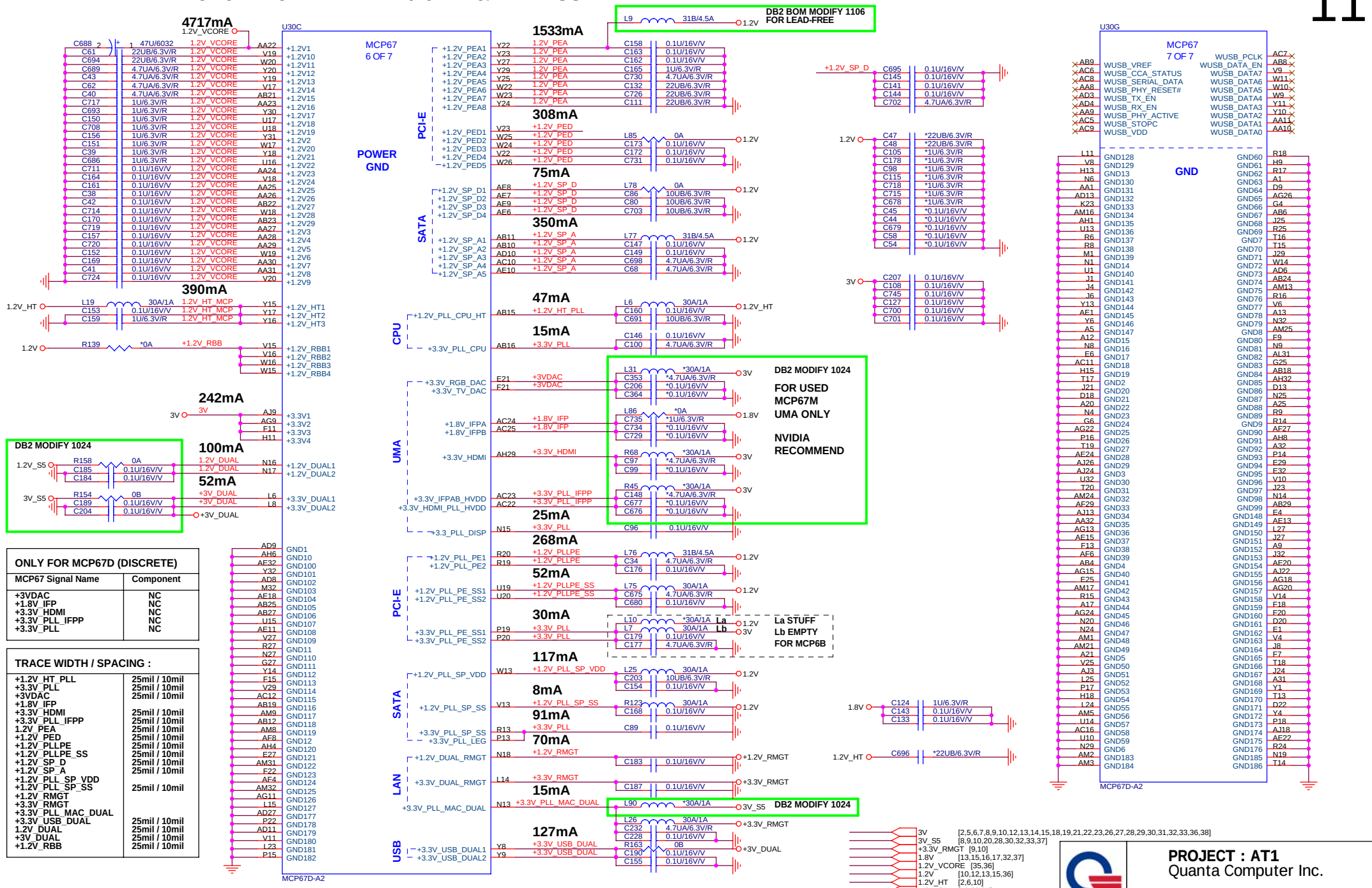

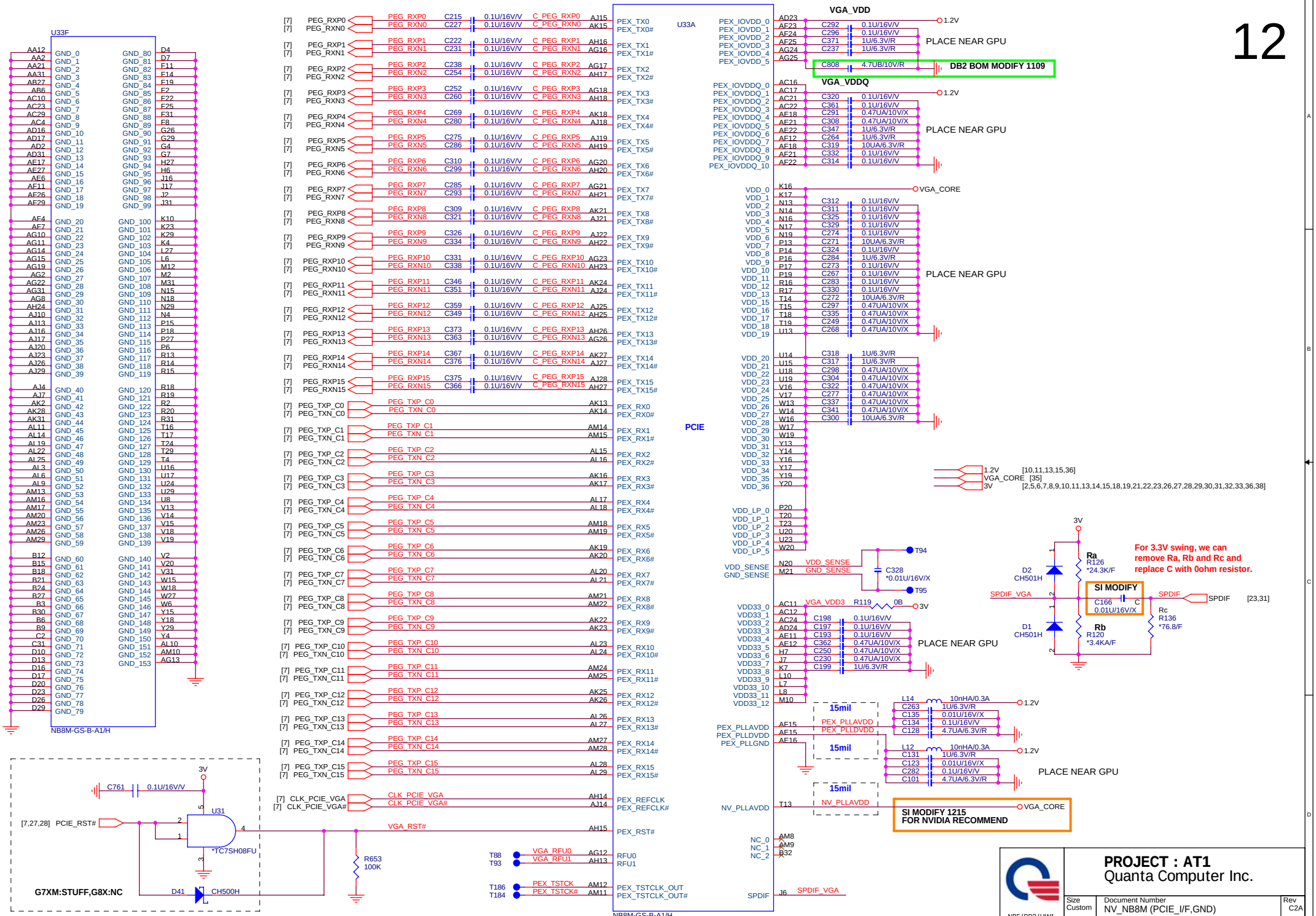

WWW.AliSaler.Com

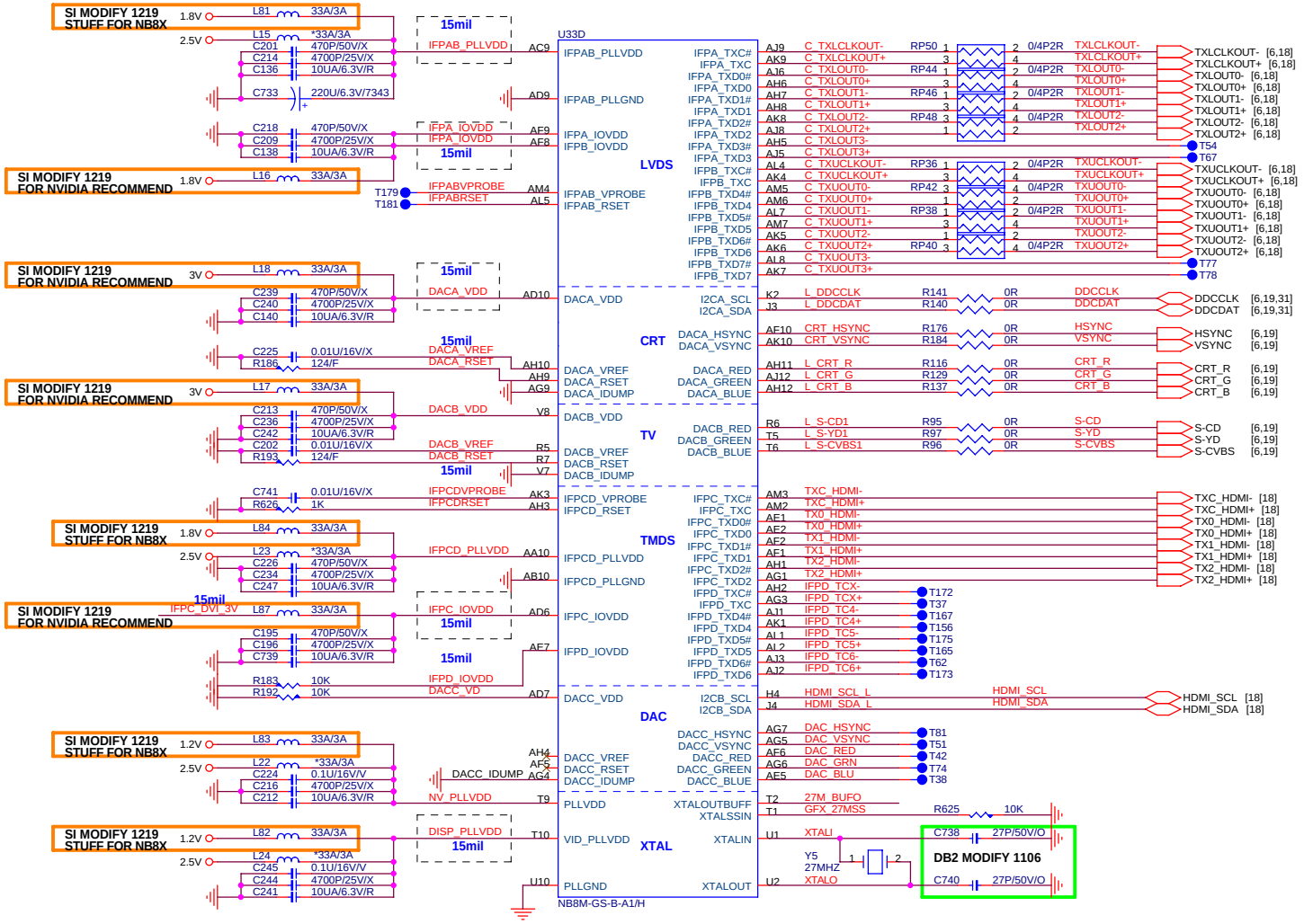

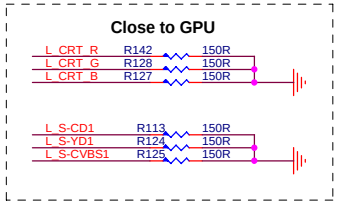

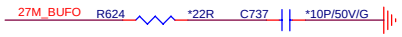

For HDMI Nvidia's PUN issue

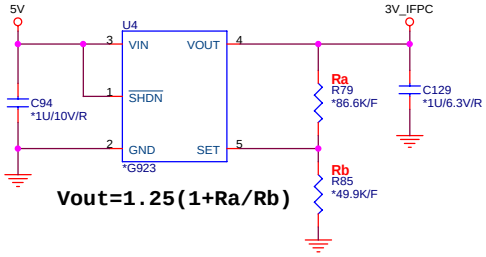

FOR IFPC VDD LEAKAGE CIRCIUT

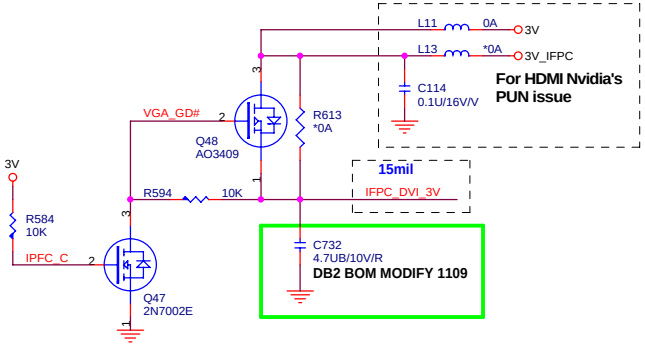

1.2V	[10,11,12,15,36]
1.8V	[11,15,16,17,32,37]
2.5V	[2,32,36]
3V	[2,5,6,7,8,9,10,11,12,14,15,18,19,21,22,23,26,27,28,29,30,31,32,33,36,38]
5V	[18,19,22,23,25,26,27,28,29,31,32,33,36,38]

PROJECT : AT1
Quanta Computer Inc.

Size	Document Number	Rev
Custom	NV_NB8M (LVDS,CRT,TV,HDMI)	C2A

NB5/RD2/HW1

Date: Wednesday, December 20, 2006 Sheet 13 of 40

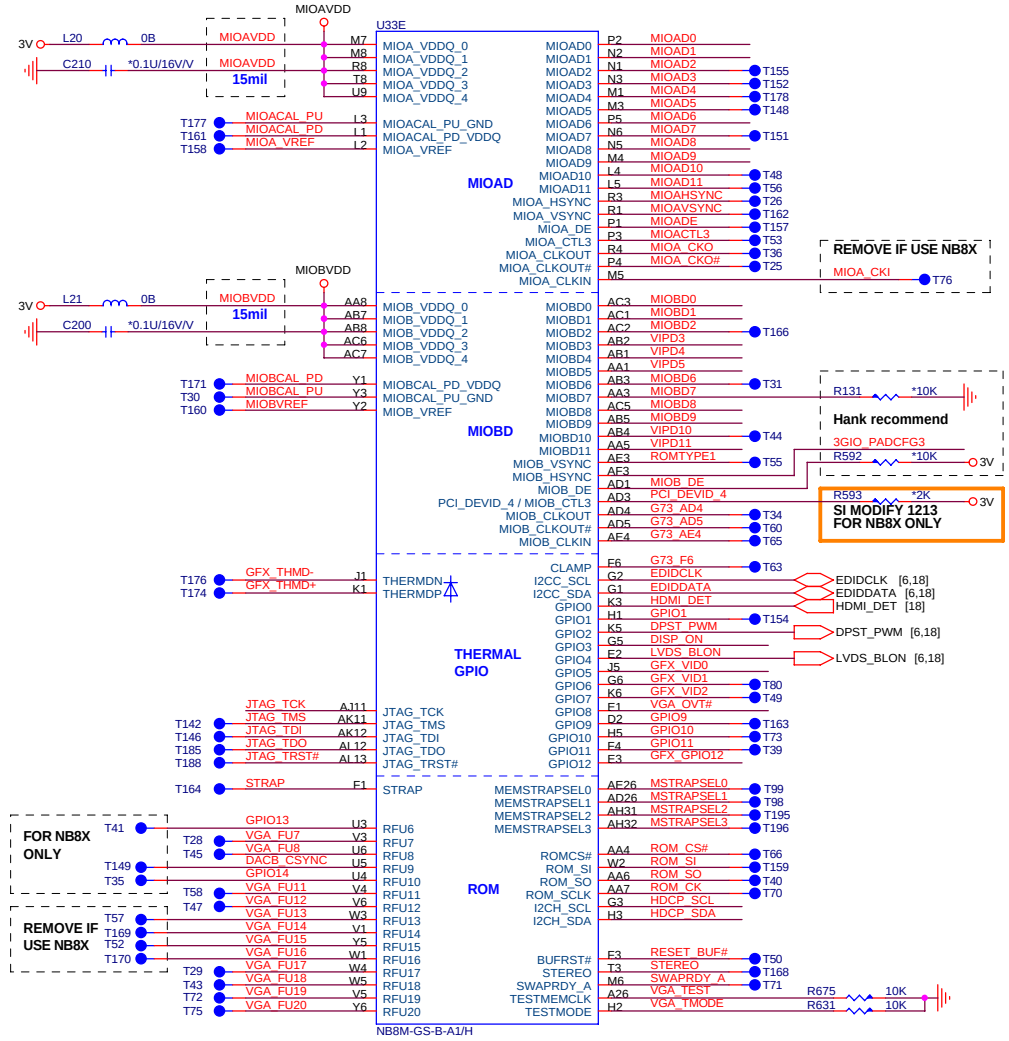

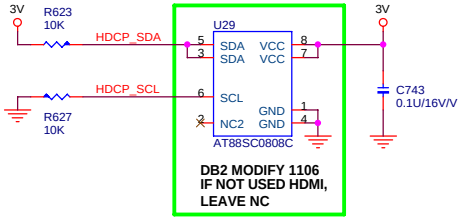

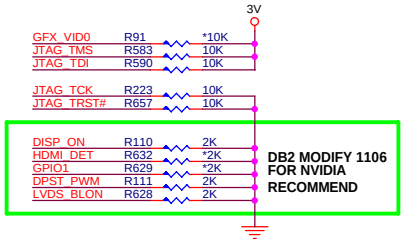

PCI DEVICE ID SETTING

PCI_DEVICE[4:0]	DESCRIPTION
00111	NB8M
OTHERS	RESERVED

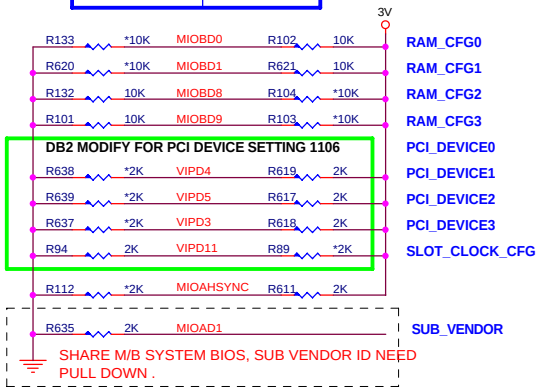

NB8X 64bit VRAM Configuration Table

RAM_CFG[3:0]	DESCRIPTION	Vendor
0000	DDR2 16Mx16x4, 64bit, 128MB	Elpida
0001	DDR2 16Mx16x4, 64bit, 128MB	Samsung
0010	DDR2 16Mx16x4, 64bit, 128MB	Infineon
0011	DDR2 16Mx16x4, 64bit, 128MB	Hynix
0100	Reserved	
0101	DDR2 32Mx16x4, 64bit, 256MB	Samsung
0110	DDR2 32Mx16x4, 64bit, 256MB	Infineon
0111	DDR2 32Mx16x4, 64bit, 256MB	Hynix
1000	DDR2 16Mx16x2, 32bit, 64MB	Elpida
1001	DDR2 16Mx16x2, 32bit, 64MB	Samsung
1010	DDR2 16Mx16x2, 32bit, 64MB	Infineon
1011	DDR2 16Mx16x2, 32bit, 64MB	Hynix
others	Reserved	

GFX_VID0

L : Low Voltage
H : Normal Voltage

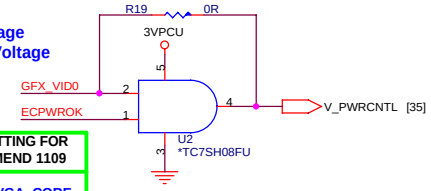

DB2 MODIFY SETTING FOR NVIDIA RECOMMEND 1109

GFX_VID0 (GPIO5)	VGA_CORE (NB8X)
HI	1.1V
LO	1.0V

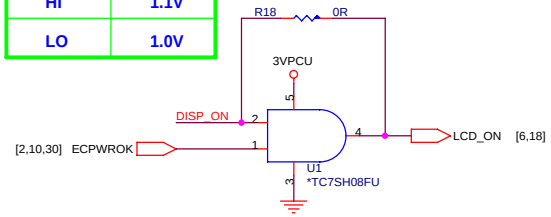

NB8X 128bit VRAM Configuration Table

RAM_CFG[3:0]	DESCRIPTION	Vendor
0000	DDR2 16Mx16x8, 128bit, 256MB	Elpida
0001	DDR2 16Mx16x8, 128bit, 256MB	Samsung
0010	DDR2 16Mx16x8, 128bit, 256MB	Infineon
0011	DDR2 16Mx16x8, 128bit, 256MB	Hynix
0100	Reserved	
0101	DDR2 32Mx16x8, 128bit, 512MB	Samsung
0110	DDR2 32Mx16x8, 128bit, 512MB	Infineon
0111	DDR2 32Mx16x8, 128bit, 512MB	Hynix
1000	DDR2 16Mx16x4, 64bit, 128MB	Elpida
1001	DDR2 16Mx16x4, 64bit, 128MB	Samsung
1010	DDR2 16Mx16x4, 64bit, 128MB	Infineon
1011	DDR2 16Mx16x4, 64bit, 128MB	Hynix
1100	Reserved	
1101	DDR2 32Mx16x4, 64bit, 256MB	Samsung
1110	DDR2 32Mx16x4, 64bit, 256MB	Infineon
1111	DDR2 32Mx16x4, 64bit, 256MB	Hynix

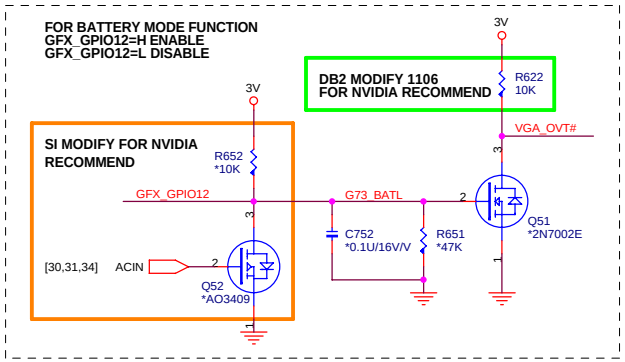

3GIO_PADCFG STRAP

3GIO_PDACFG[3:0]	DESCRIPTION
0000	DESKTOP
0001	MOBILE
OTHERS	RESERVED

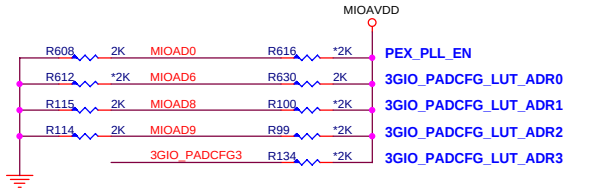

3V [2,5,6,7,8,9,10,11,12,13,15,18,19,21,22,23,26,27,28,29,30,31,32,33,36,38]
3VPCU [9,18,28,29,30,31,33,34,35]

NB5/RD2/HW1

PROJECT : AT1
Quanta Computer Inc.

Size	Document Number	Rev
Custom	NV_NB8M (ROM,GPIO,STRAP)	C2A

Date: Wednesday, December 20, 2006 Sheet 14 of 40

WWW.AliSaler.Com

Channel C is available for 128bit only

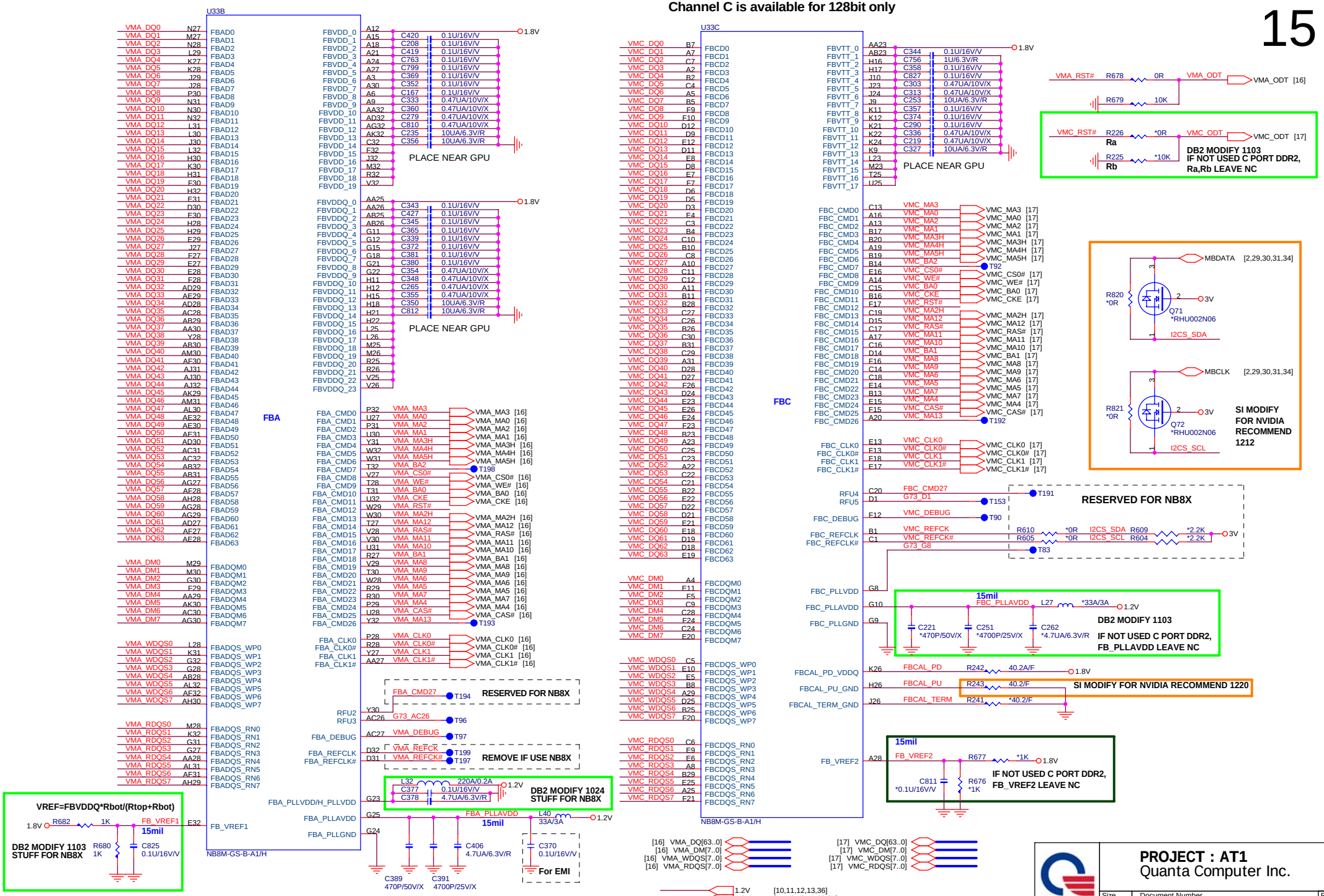

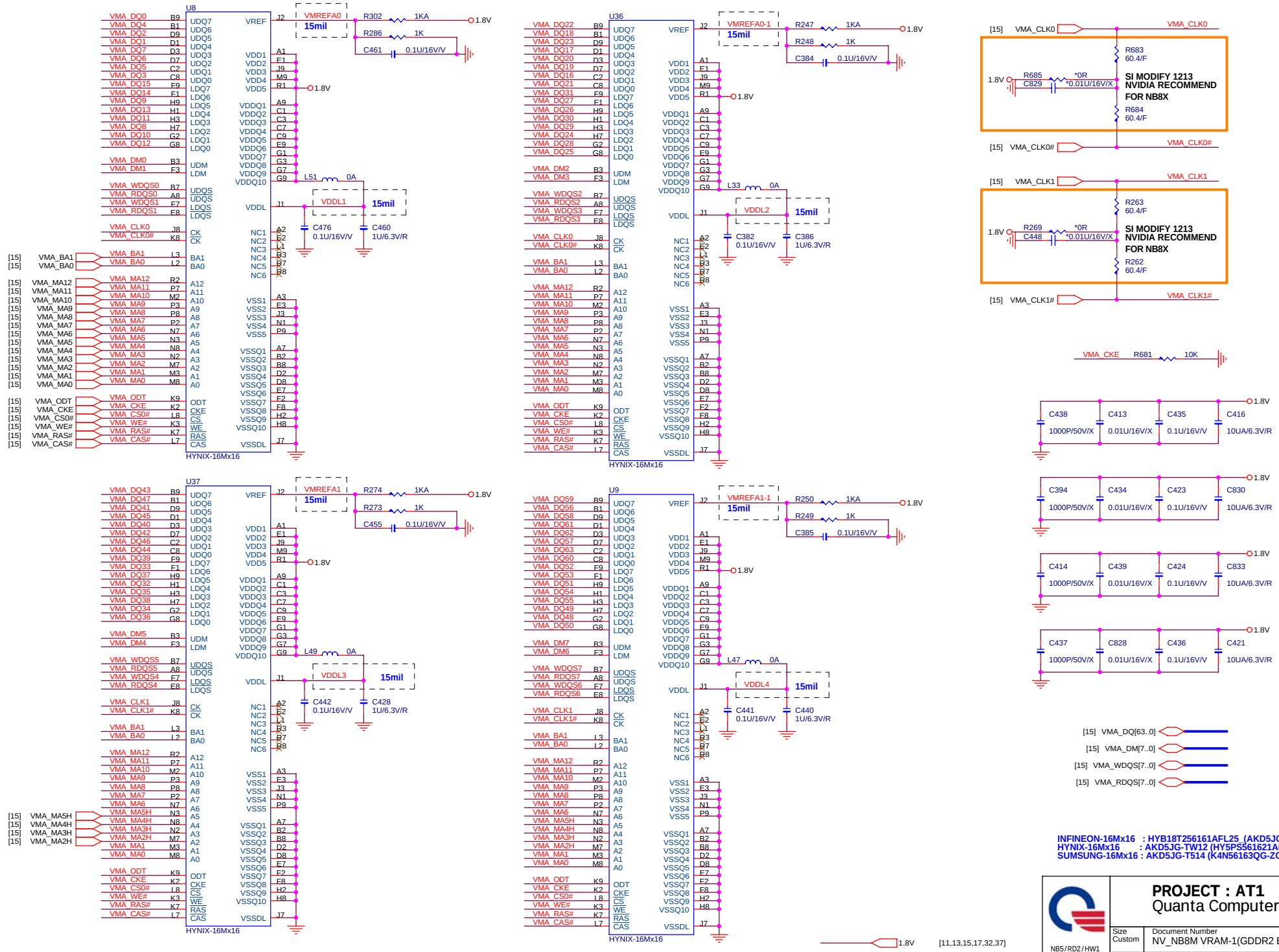

WWW.AliSaler.Com

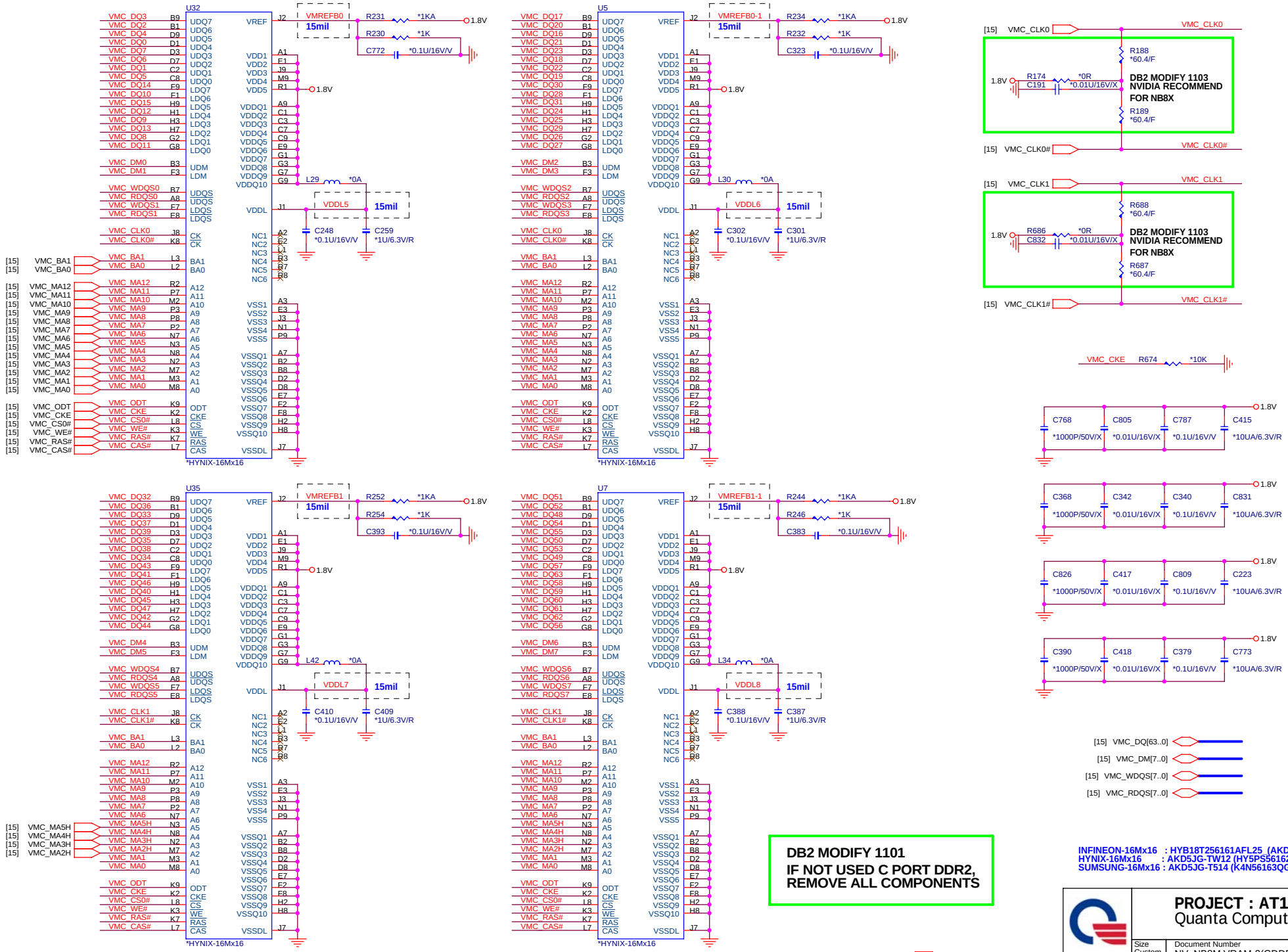
U32
U5
U35
U7
VMREFB0
VMREFB0-1
VMREFB1
VMREFB1-1
15mil
R231 *1KA
R230 *1K
C772 *0.1U/16V/V
R234 *1KA
R232 *1K
C323 *0.1U/16V/V
R252 *1KA
R254 *1K
C393 *0.1U/16V/V
R244 *1KA
R246 *1K
C383 *0.1U/16V/V
1.8V
L29 *0A
L30 *0A
L42 *0A
L34 *0A
VDDL5
VDDL6
VDDL7
VDDL8
C248 *0.1U/16V/V
C259 *1U/6.3V/R
C302 *0.1U/16V/V
C301 *1U/6.3V/R
C410 *0.1U/16V/V
C409 *1U/6.3V/R
C388 *0.1U/16V/V
C387 *1U/6.3V/R
*HYNIX-16Mx16
[15] VMC_CLK0
VMC_CLK0
R188 *60.4/F
R174 *0R
C191 *0.01U/16V/X
DB2 MODIFY 1103
NVIDIA RECOMMEND
FOR NB8X
R189 *60.4/F
[15] VMC_CLK0#
VMC_CLK0#
[15] VMC_CLK1
VMC_CLK1
R688 *60.4/F
R686 *0R
C832 *0.01U/16V/X
DB2 MODIFY 1103
NVIDIA RECOMMEND
FOR NB8X
R687 *60.4/F
[15] VMC_CLK1#
VMC_CLK1#
VMC_CKE R674 *10K
C768 C805 C787 C415
*1000P/50V/X *0.01U/16V/X *0.1U/16V/V *10UA/6.3V/R
C368 C342 C340 C831
C826 C417 C809 C223
C390 C418 C379 C773
[15] VMC_DQ[63..0]
[15] VMC_DM[7..0]
[15] VMC_WDQS[7..0]
[15] VMC_RDQS[7..0]
DB2 MODIFY 1101
IF NOT USED C PORT DDR2,
REMOVE ALL COMPONENTS
INFINEON-16Mx16 : HYB18T256161AFL25 (AKD5JG-T^08))
HYNIX-16Mx16 : AKD5JG-TW12 (HY5PS561621AFP-25_1.8V)
SUMSUNG-16Mx16 : AKD5JG-T514 (K4N56163QG-ZC25_1.8V)
1.8V [11,13,15,16,32,37]
NB5/RD2/HW1
PROJECT : AT1
Quanta Computer Inc.
Size Custom
Document Number
NV_NB8M VRAM-2(GDDR2 BGA84)
Rev C2A
Date: Wednesday, December 20, 2006
Sheet 17 of 40

LCD CONNECTOR

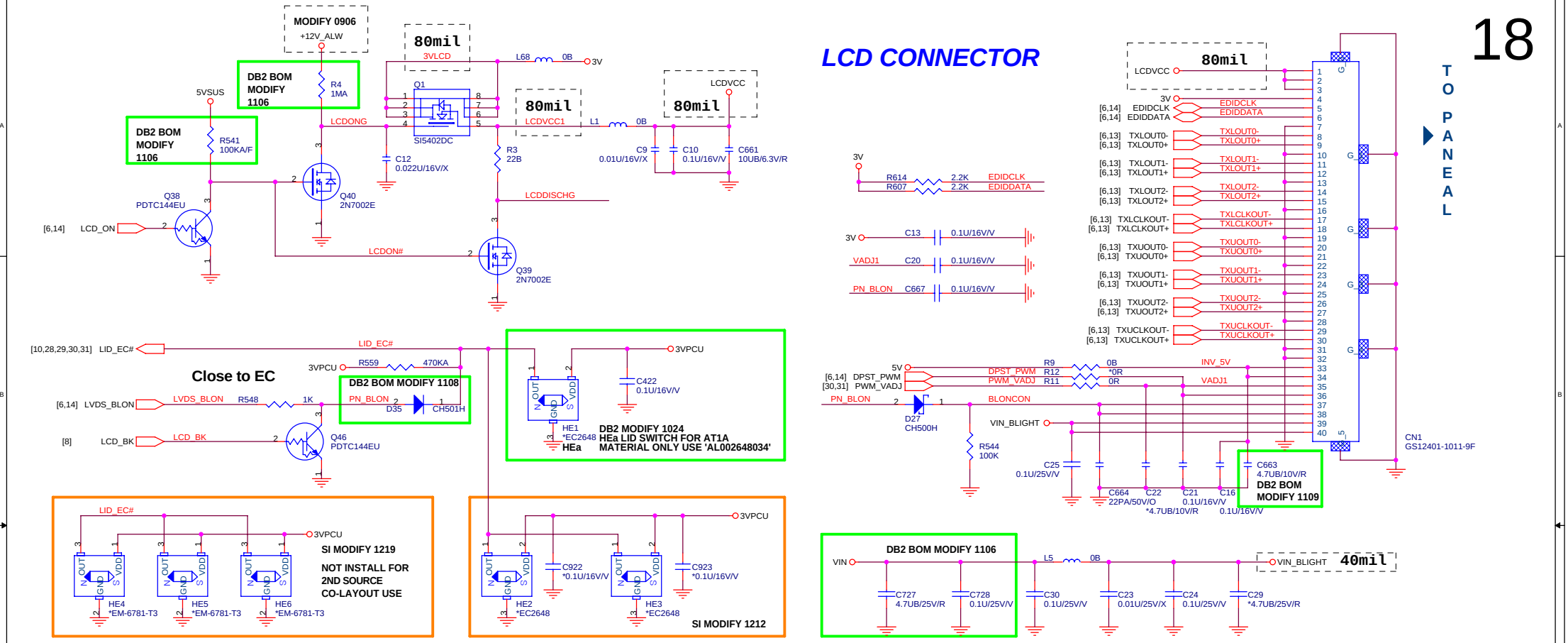

HDMI PORT

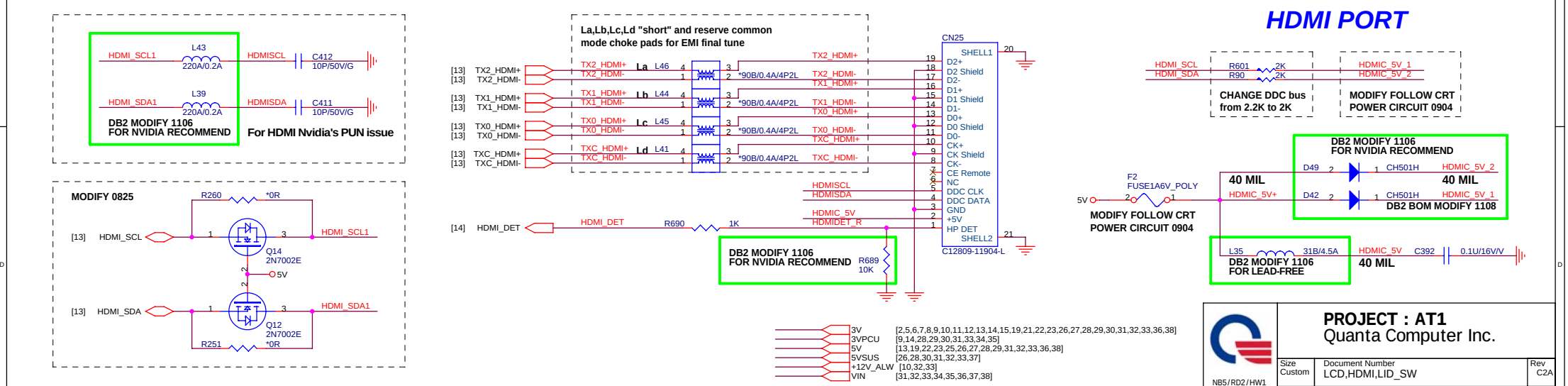

NB5/RD2/HW1	PROJECT : AT1 Quanta Computer Inc.	
Size Custom	Document Number LCD,HDMI,LID_SW	Rev C2A
	Date: Wednesday, December 20, 2006	Sheet 18 of 40

WWW.AliSaler.Com

CRT PORT

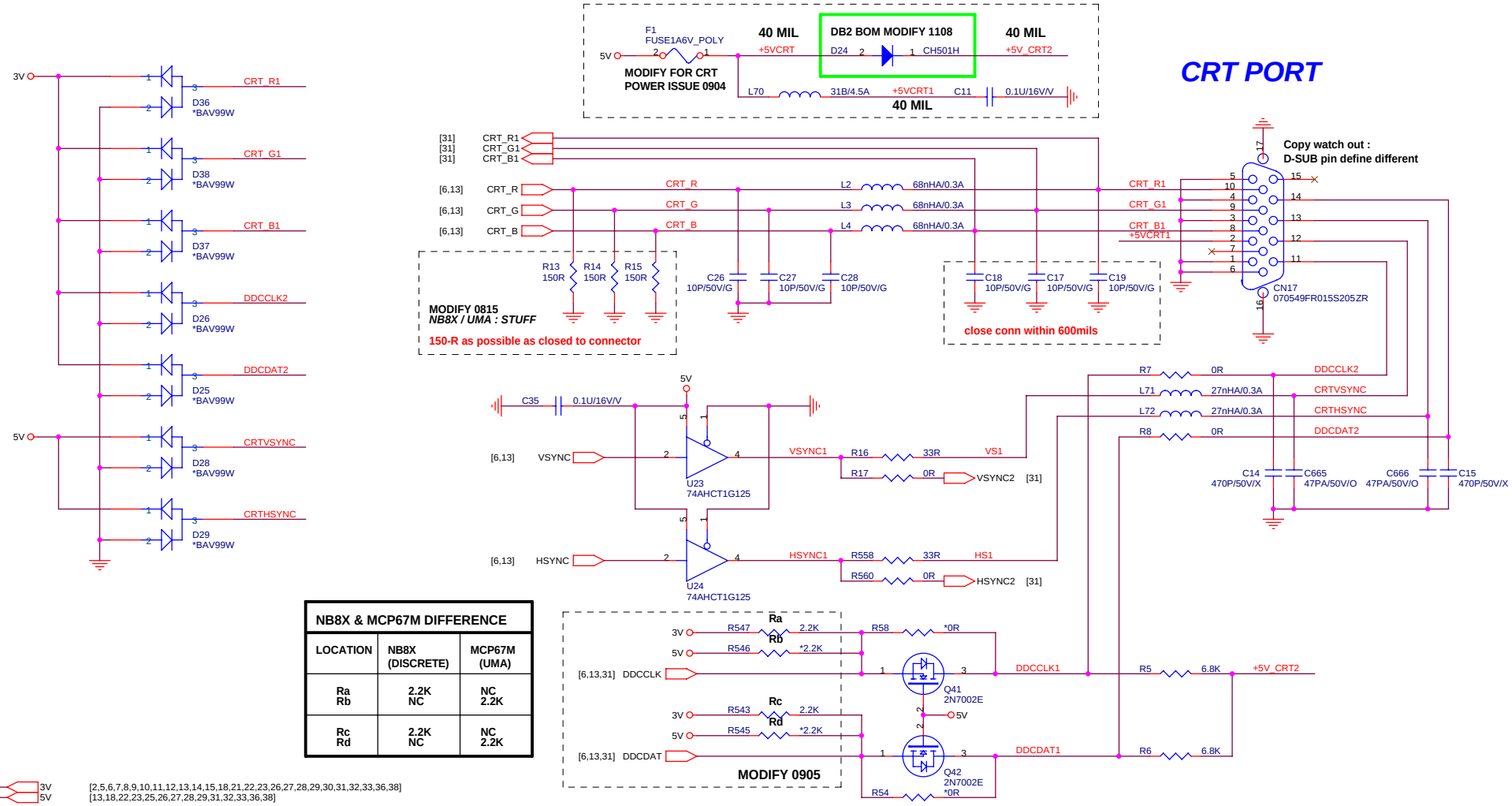

NB8X & MCP67M DIFFERENCE		
LOCATION	NB8X (DISCRETE)	MCP67M (UMA)
Ra Rb	2.2K NC	NC 2.2K
Rc Rd	2.2K NC	NC 2.2K

TV_OUT

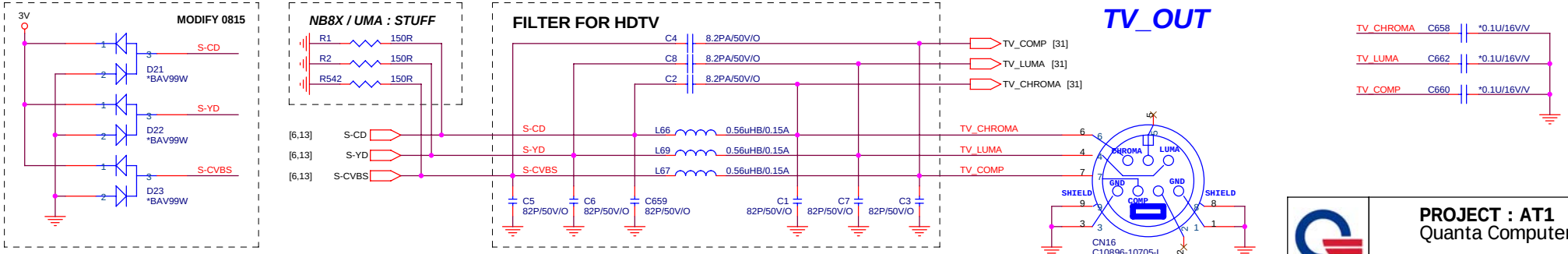

PROJECT : AT1
Quanta Computer Inc.

Size	Document Number	Rev
Custom	CRT,TV_OUT	C2A

NB5/RD2/HW1

Date: Wednesday, December 20, 2006 Sheet 19 of 40

10/100M

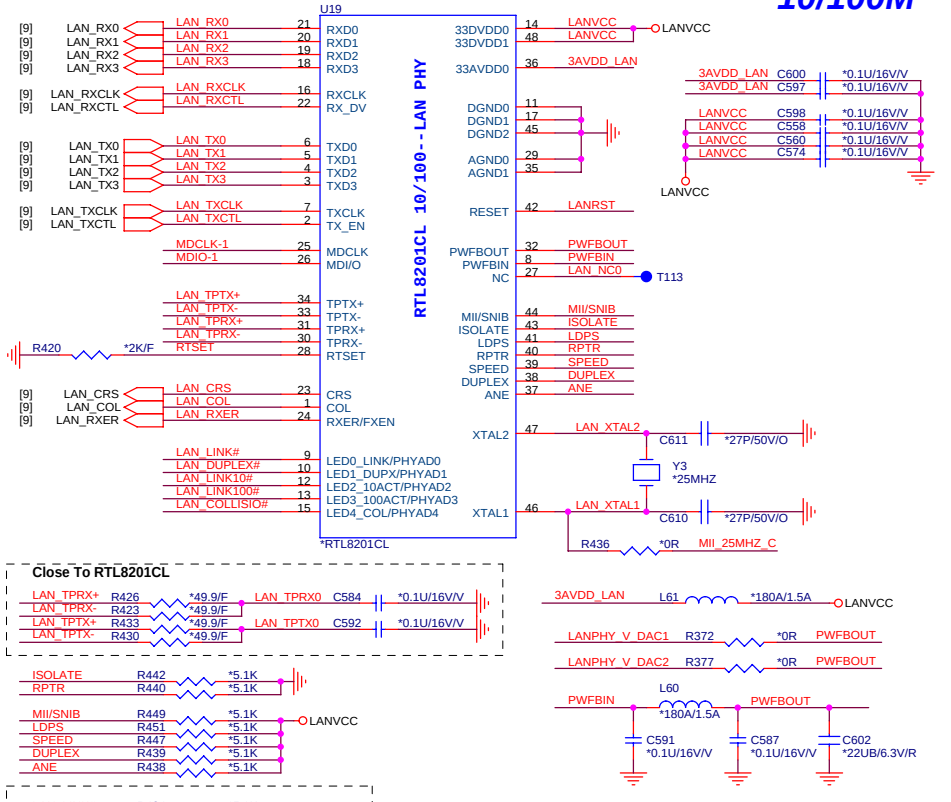

Close To RTL8201CL

LAN_TPRX+ R426 *49.9/F LAN_TPRX0 C584 *0.1U/16V/V
LAN_TPRX- R423 *49.9/F
LAN_TPTX+ R433 *49.9/F LAN_TPTX0 C592 *0.1U/16V/V
LAN_TPTX- R430 *49.9/F

ISOLATE R442 *5.1K
RPTR R440 *5.1K

MII/SNIB R449 *5.1K
LDPS R451 *5.1K
SPEED R447 *5.1K
DUPLEX R439 *5.1K
ANE R438 *5.1K
LANVCC

LAN_LINK# R424 *5.1K
LAN_DUPLEX# R418 *5.1K
LAN_LINK10# R414 *5.1K
LAN_LINK100# R401 *5.1K
LAN_COLLISIO# R400 *5.1K
LANVCC
PHY Address:00001

LAN_COL R431 *5.1K
LAN_RXER R398 *5.1K
LAN_CRS R399 *5.1K

3AVDD_LAN L61 *180A/1.5A LANVCC
LANPHY_V_DAC1 R372 *0R PWFBOUT
LANPHY_V_DAC2 R377 *0R PWFBOUT
PWFBIN L60 *180A/1.5A PWFBOUT
C591 *0.1U/16V/V C587 *0.1U/16V/V C602 *22UB/6.3V/R

LAN_COL	1		RTL8201BL LED
	0	Default	RTL8201CL LED
LAN_RXER_R	1		Fiber Mode
	0	Default	UTP Mode
LAN_CRS	0	Default	Ensure operating at normal mode

CLOSE TRANSFORMER

LAN_TPRX+ R373 *0R +LANPHY_MDI1
LAN_TPRX- R374 *0R -LANPHY_MDI1
LAN_TPTX+ R375 *0R +LANPHY_MDI0
LAN_TPTX- R376 *0R -LANPHY_MDI0

CLOSE RJ45/11 CONN

+LAN_MX2 R331 *0R LAN_MX2_R R333 LANMCT_G
-LAN_MX2 R332 *0R *75R
+LAN_MX3 R336 *0R LAN_MX3_R R335 LANMCT_G
-LAN_MX3 R337 *0R *75R

LAN_LINK# R428 *0R LAN_GLED# C585 *470P/50V/X
LAN_YLED# R190 *330/F
DB2 MODIFY 1101

LAN_LINK100# *CH501H D3
LAN_LINK10# *CH501H D4 LAN_YLED

LINK10/100# assert high while system power up.

LANVCC [32,33]
3V_S5 [8,9,10,11,28,30,32,33,37]

10/100/1000M

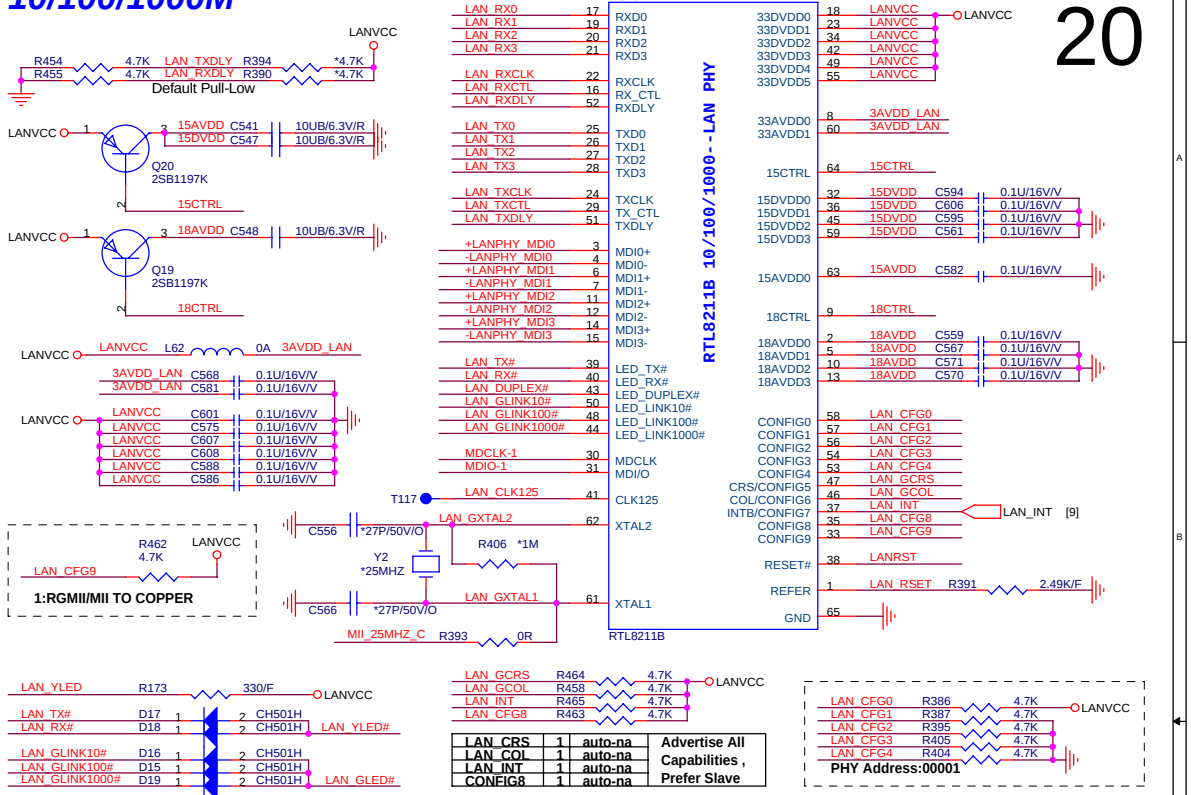

LAN_YLED R173 330/F LANVCC
LAN_TX# D17 CH501H
LAN_RX# D18 CH501H LAN_YLED#
LAN_GLINK10# D16 CH501H
LAN_GLINK100# D15 CH501H
LAN_GLINK1000# D19 CH501H LAN_GLED#

LAN_GCRS R464 4.7K
LAN_GCOL R458 4.7K
LAN_INT R465 4.7K
LAN_CFG8 R463 4.7K
LANVCC

LAN_CRS	1	auto-na	Advertise All Capabilities , Prefer Slave
LAN_COL	1	auto-na	
LAN_INT	1	auto-na	
CONFIG8	1	auto-na	

LAN_CFG0 R386 4.7K
LAN_CFG1 R387 4.7K
LAN_CFG2 R395 4.7K
LAN_CFG3 R405 4.7K
LAN_CFG4 R404 4.7K
LANVCC
PHY Address:00001

SI MODIFY 1215
FOR LANVCC LEAKAGE

3V_S5
[9] MII_25MHZ
LAN_POWER_R
U48
*TC7SH08FU
MII_25MHZ_C
[9] MII_25MHZ R828 0R MII_25MHZ_C
[30,31,32] LAN_POWER R833 *0R LAN_POWER_R

LAN_GLED R235 330/F LANVCC

R445 10K/F LANVCC SI MODIFY 1220

D14 CH501H
LANRST R441 *0R
DB2 MODIFY 1106
STUFF DIODE FOR LEAKAGE ISSUE
MIIRST# [9]
R452 *0R GRST# [21,30,31]

LAN_MCT0 R328 75R
LAN_MCT1 R329 75R LANMCT_G C523 1000P/3KV/1808

LAN_MCT2 Ra R330 75R
LAN_MCT3 Rb R334 75R
MDIO Rc R403 10K/F LANVCC

Ca C551 0.01U/16V/X LANPHY_V_DAC1
Cb C552 0.01U/16V/X LANPHY_V_DAC2
Cc C553 0.01U/16V/X LANPHY_V_DAC3
Cd C550 0.01U/16V/X LANPHY_V_DAC4

RTL8211B :
Ca,Cb 0.01U/16V/X
Rc 10K/F

RTL8201CL :
Ca,Cb 0.1U/16V/V
Ra,Rb,Cc,Cd REMOVE
Rc 1.5K/F

DB2 MODIFY 1106

LANVCC Q22 2N7002E
[9] MDCLK MDCLK-1
R419 *0R
FOR LEAKAGE ISSUE

LANVCC Q21 2N7002E
[9] MDIO MDIO-1
R383 *0R

RTL8211B : NS892402
RTL8201CL : NS892405

U16
NS892402

LANPHY_V_DAC1	1	TCT1	MCT1
+LANPHY_MDI0	2	TD1+	MX1+
-LANPHY_MDI0	3	TD1-	MX1-
LANPHY_V_DAC2	4	TCT2	MCT2
+LANPHY_MDI1	5	TD2+	MX2+
-LANPHY_MDI1	6	TD2-	MX2-
LANPHY_V_DAC3	7	TCT3	MCT3
+LANPHY_MDI2	8	TD3+	MX3+
-LANPHY_MDI2	9	TD3-	MX3-
LANPHY_V_DAC4	10	TCT4	MCT4
+LANPHY_MDI3	11	TD4+	MX4+
-LANPHY_MDI3	12	TD4-	MX4-

24	LAN_MCT0		
23	+LAN_MX0	+LAN_MX0	[31]
22	-LAN_MX0	-LAN_MX0	[31]
21	LAN_MCT1		
20	+LAN_MX1	+LAN_MX1	[31]
19	-LAN_MX1	-LAN_MX1	[31]
18	LAN_MCT2		
17	+LAN_MX2	+LAN_MX2	[31]
16	-LAN_MX2	-LAN_MX2	[31]
15	LAN_MCT3		
14	+LAN_MX3	+LAN_MX3	[31]
13	-LAN_MX3	-LAN_MX3	[31]

LANVCC
DB2 EMI MODIFY
C918 0.1U/16V/V
C919 0.1U/16V/V
C914 470P/50V/X LAN_YLED
C915 470P/50V/X LAN_YLED#
C916 470P/50V/X LAN_GLED
C917 470P/50V/X LAN_GLED#

RJ45

CN24
C100F9-110A4-L

LAN_YLED	1	LED_YEL_P	
LAN_YLED#	2	LED_YEL_N	
+LAN_MX0	3	MX0+	GND 15
-LAN_MX0	4	MX0-	
+LAN_MX1	5	MX1+	GND 16
+LAN_MX2	6	MX2+	
-LAN_MX2	7	MX2-	
-LAN_MX1	8	MX1-	
+LAN_MX3	9	MX3+	
-LAN_MX3	10	MX3-	GND 17
LAN_GLED	11	LED_GRE_P	GND 18
LAN_GLED#	12	LED_GRE_N	

RJ11

CN2
3800N-E002-NNN-1
TIP 13
RING 14
C806 470P/3KV/1808
C807 470P/3KV/1808

RTL8211B : C100F9-110A4-L
RTL8201CL : C100J2-100A4-L

PROJECT : AT1
Quanta Computer Inc.

Size	Document Number	Rev
Custom	RTL8211B,8201CL,RJ45,RJ11	C2A

Date: Wednesday, December 20, 2006 Sheet 20 of 40

NB5/RD2/HW1

WWW.AliSaler.Com

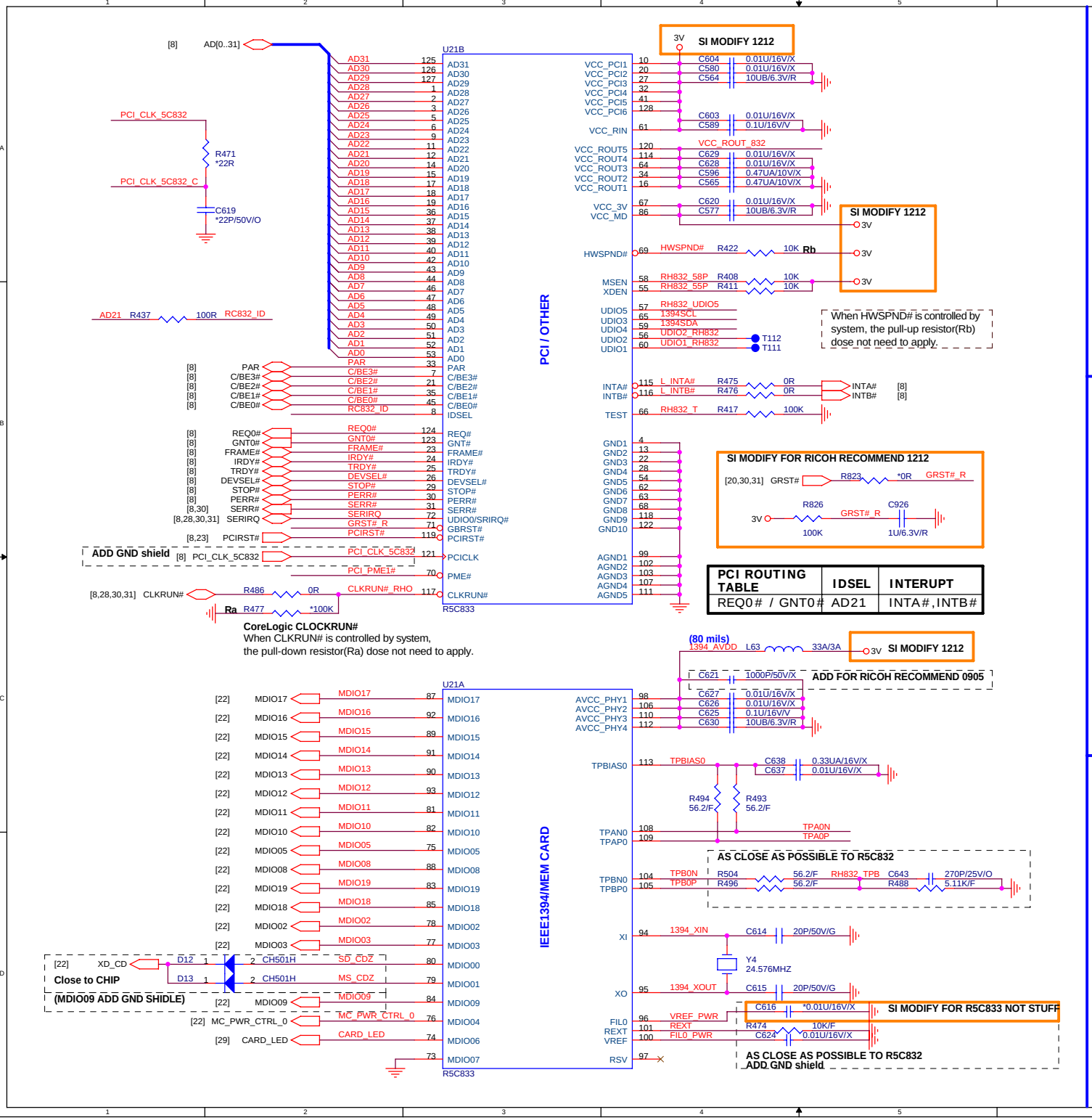

PCI ROUTING TABLE	IDSEL	INTERUPT
REQ0# / GNT0#	AD21	INTA#,INTB#

Serial EEPROM

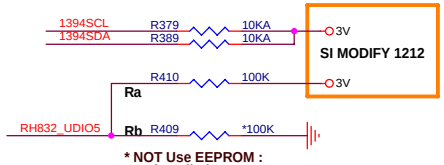

* NOT Use EEPROM :
Ra : installed
Rb : NOT installed

* Use EEPROM :
Ra : NOT installed
Rb : installed

AS CLOSE AS POSSIBLE TO 1394 CONNECTOR.

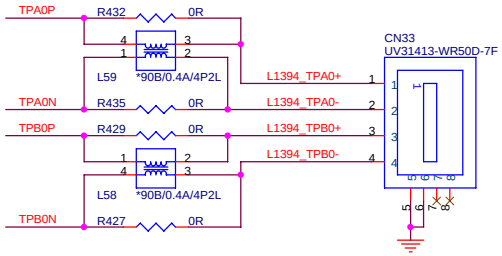

*TPA/TPA#,TPB/TPB# pair trace : As close as possible.
*TPA/TPA#,TPB/TPB# pair trace : Same length electrically.And layot with shields.

*Termination resistor for TPA+/- TPB+/- : As close as possible to its cable driver (device pin out).

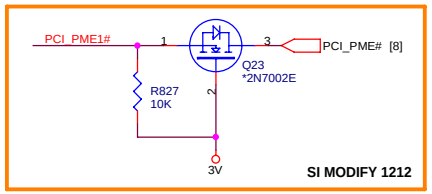

3V [2,5,6,7,8,9,10,11,12,13,14,15,18,19,22,23,26,27,28,29,30,31,32,33,36,38]

PROJECT : AT1
Quanta Computer Inc.

Size	Document Number	Rev
Custom	R5C832V00,1394 PORT	C2A

NB5/RD2/HW1

Date: Wednesday, December 20, 2006 Sheet 21 of 40

4 IN1 CARD READER
XD,MMC/SD,MS/MSP

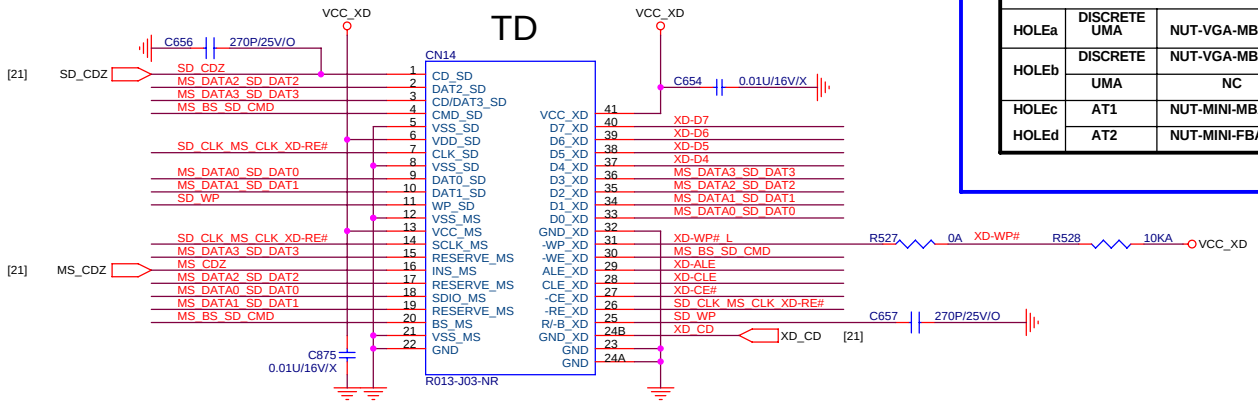

Note: Need to add WP# and CD# pad for Proconn

AT1 & AT2 AND DISCRETE & UMA DIFFERENCE TABLE		
HOLE	STATUS	NUT
HOLEa	DISCRETE UMA	NUT-VGA-MBAT8002
HOLEb	DISCRETE	NUT-VGA-MBAT8002
	UMA	NC
HOLEc	AT1	NUT-MINI-MBAT8004
HOLEd	AT2	NUT-MINI-FBAT9035

SCREW HOLE

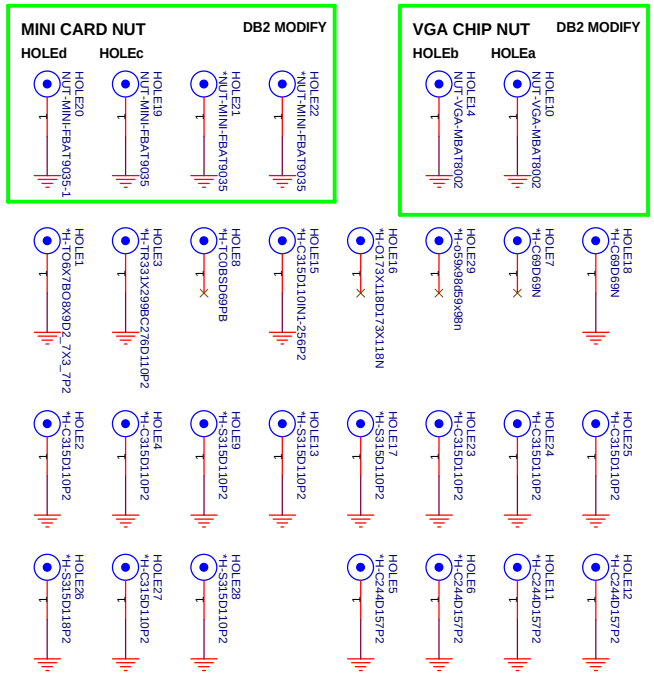

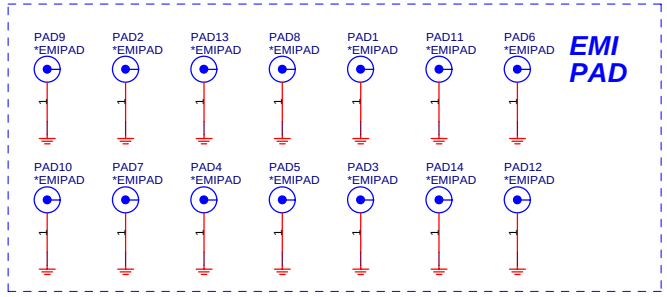

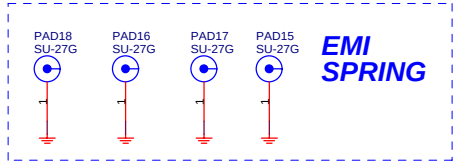

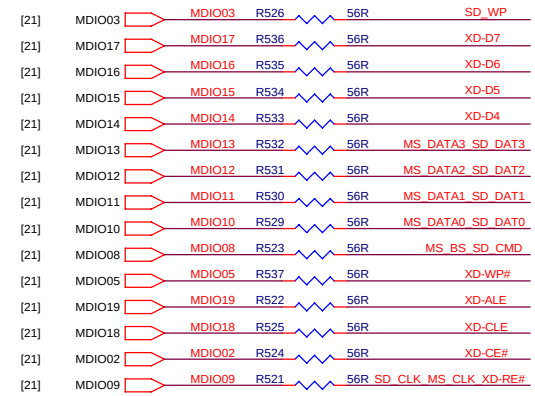

2ND SOURCE

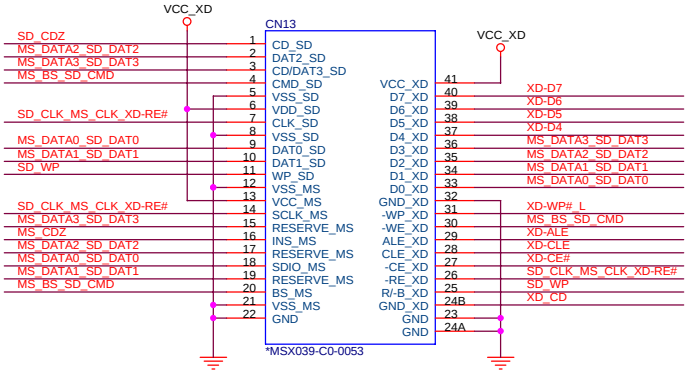

*NOT INSTALL FOR 2ND SOURCE CO-LAYOUT USED

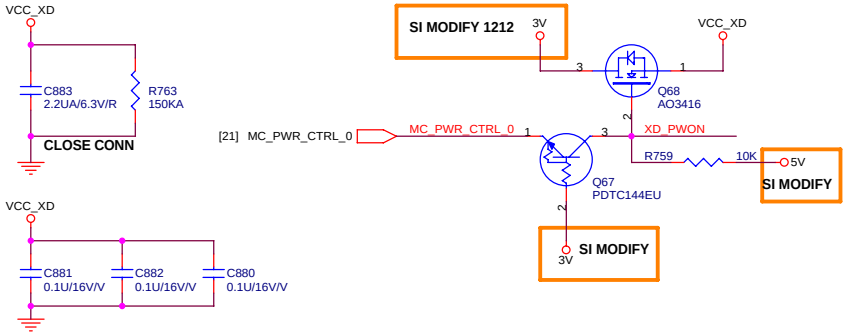

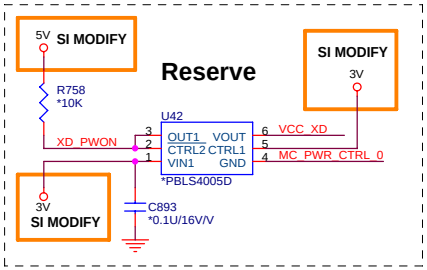

3V [2,5,6,7,8,9,10,11,12,13,14,15,18,19,21,23,26,27,28,29,30,31,32,33,36,38]
5V [13,18,19,23,25,26,27,28,29,31,32,33,36,38]

NB5/RD2/HW1	PROJECT : AT1 Quanta Computer Inc.	
Size Custom	Document Number CARD_READER,HOLE,NUT,SPRING	Rev C2A
Date: Wednesday, December 20, 2006	Sheet 22 of 40	

WWW.AliSaler.Com

VDDIO is used in determining which HD Audio bus voltage is present on the system. When VDDIO is +1.5V, the device will use 1.5v signaling on the HDA interface pins; when VDDIO is +3.3v, the device will use 3.3v signaling on the HDA interface pins.

For associated Line Side Device portion of this design
see Conexant RD02-D450 reference schematic

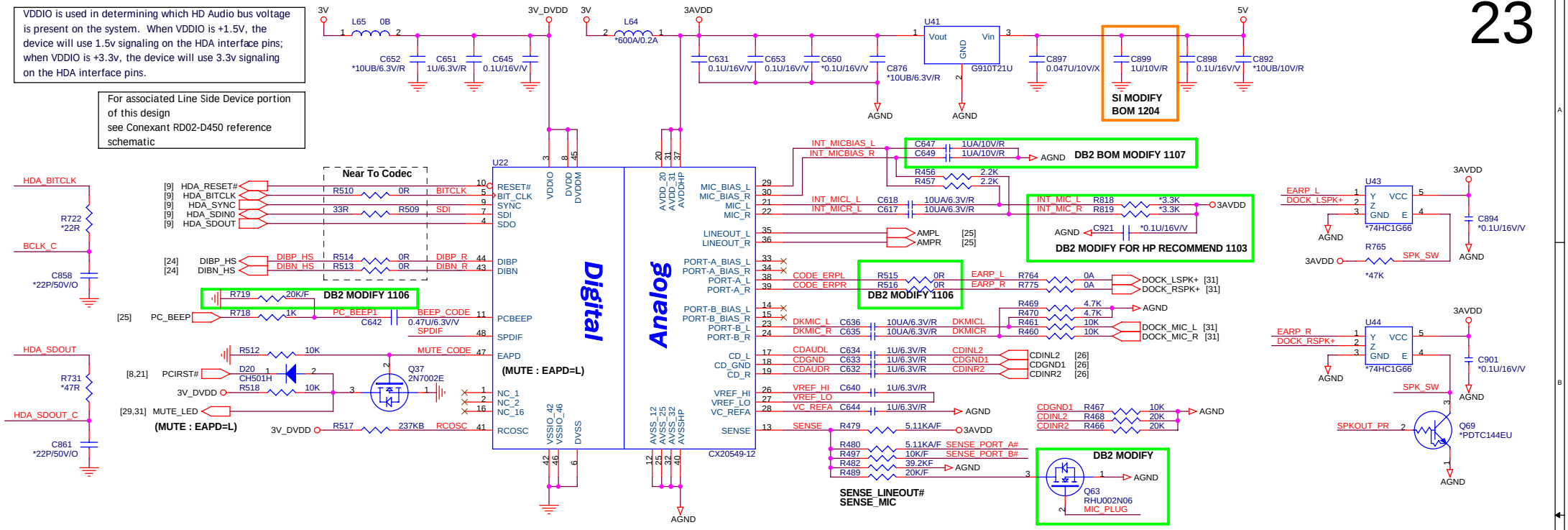

TO AUDIO/B CON.

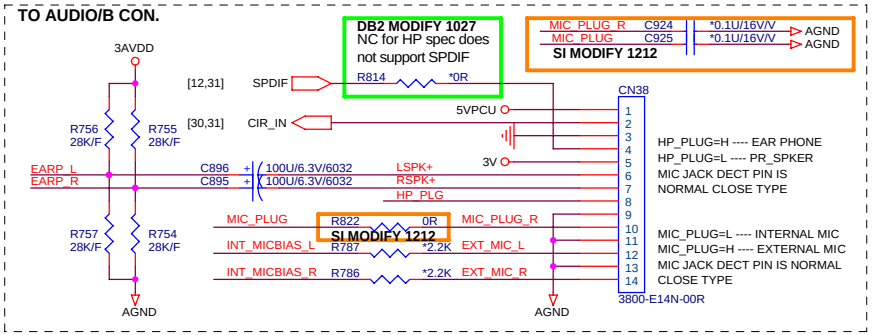

EXTERNAL MIC SW

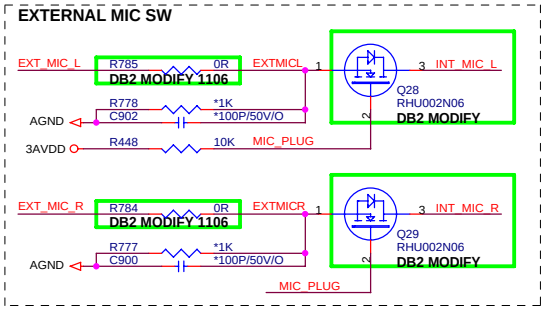

INTERNAL MIC SW

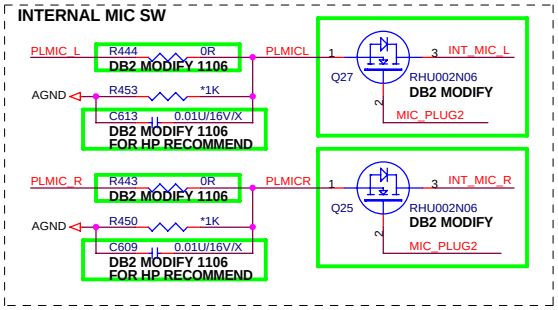

EAR PHONE SYSTEM/DOCK SW

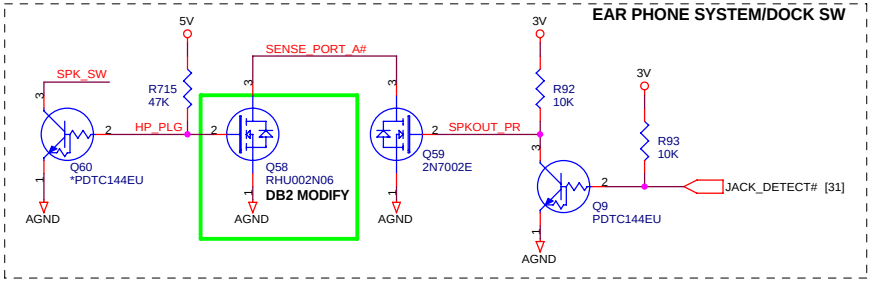

DOCK MIC DETECT

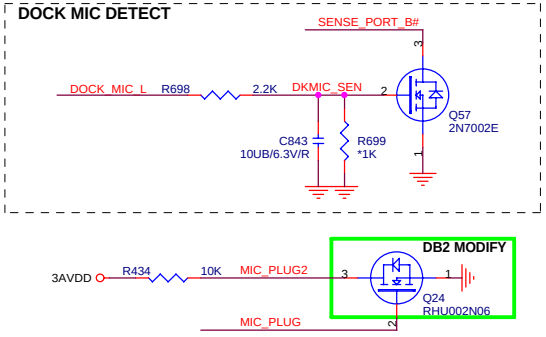

INTERNAL MIC

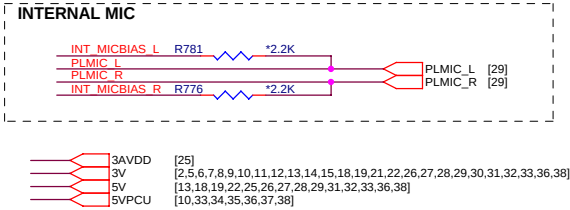

3AVDD	[25]	
3V	[2,5,6,7,8,9,10,11,12,13,14,15,18,19,21,22,26,27,28,29,30,31,32,33,36,38]	
5V	[13,18,19,22,25,26,27,28,29,31,32,33,36,38]	
5VPCU	[10,33,34,35,36,37,38]	

PROJECT : AT1
Quanta Computer Inc.

Size	Document Number	Rev
Custom	HDA_CX20549-12,AUDIO_BOARD	C2A

NB5/RD2/HW1

Date: Wednesday, December 20, 2006 Sheet 23 of 40

Revision History		
REV	Description	Date
0	Initial Release	April 26, 2005
4		

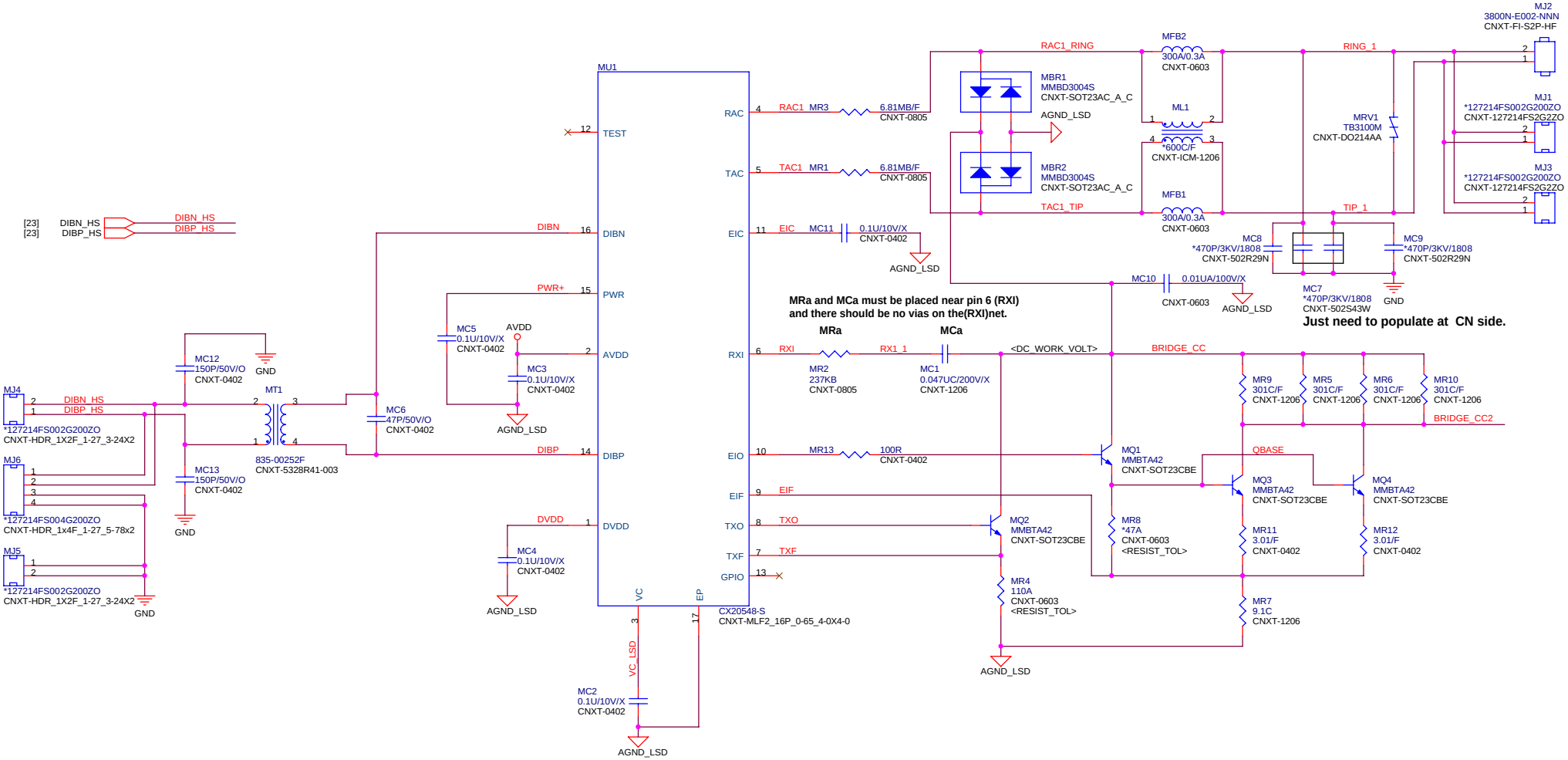

PROJECT : AT1
Quanta Computer Inc.

Size	Document Number	Rev
Custom	MODEM(DAA)_CX20548-S	C2A

NB5/RD2/HW1

Date: Wednesday, December 20, 2005 Sheet 24 of 40

WWW.AliSaler.Com

AUDIO AMPLIFIER

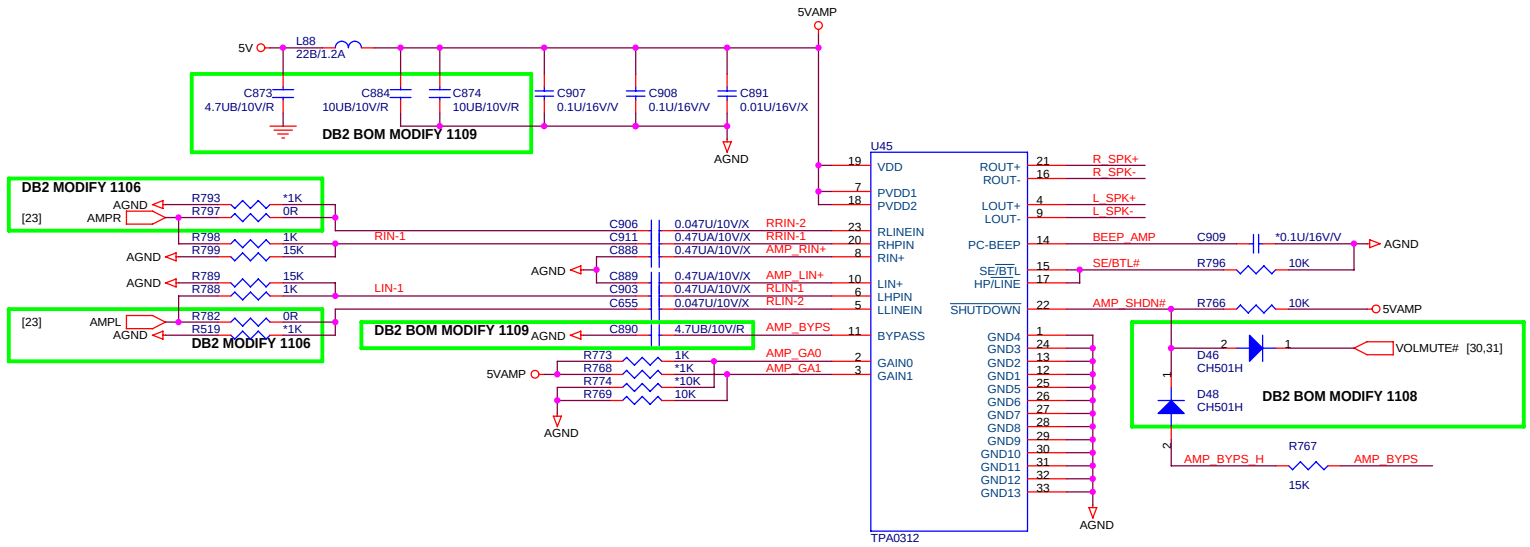

0312 Gain Table

GAIN0	GAIN1	SE/BTL	AV(INV)
0	0	0	6dB
0	1	0	10dB
1	0	0	15.6dB
1	1	0	21.6dB
x	x	1	4.1dB

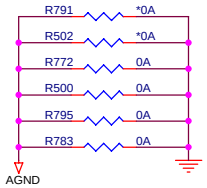

INT. SPEAKER

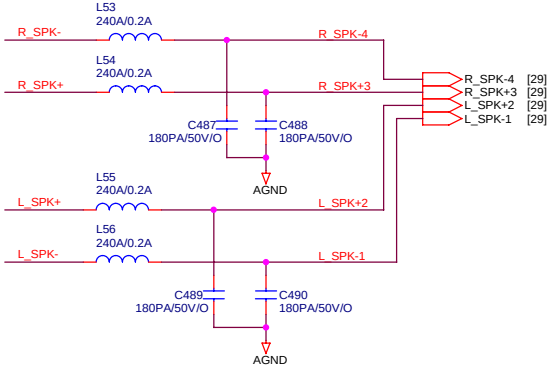

PCSPK BEEP

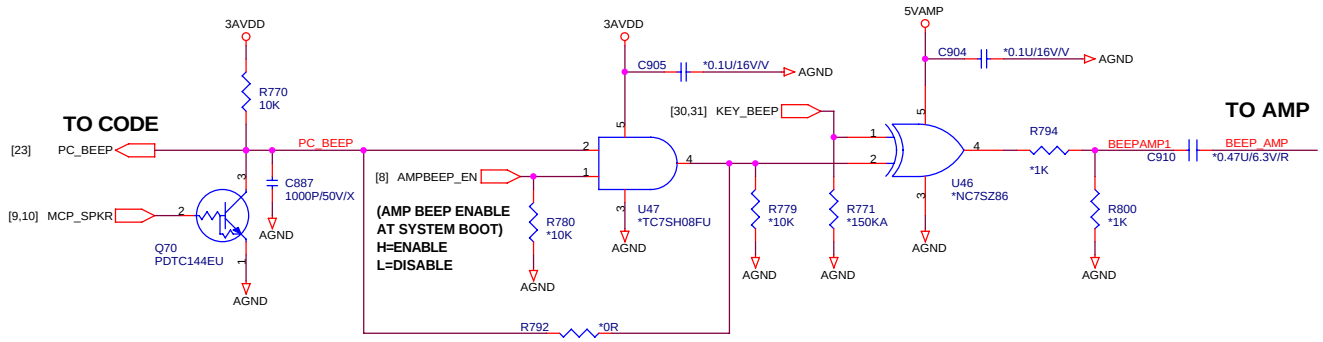

3AVDD [23]
5V [13,18,19,22,23,26,27,28,29,31,32,33,36,38]

NB5/RD2/HW1

PROJECT : AT1
Quanta Computer Inc.

Size	Document Number	Rev
Custom	AMP_TPA0312	C2A

Date: Wednesday, December 20, 2006 Sheet 25 of 40

CD-ROM

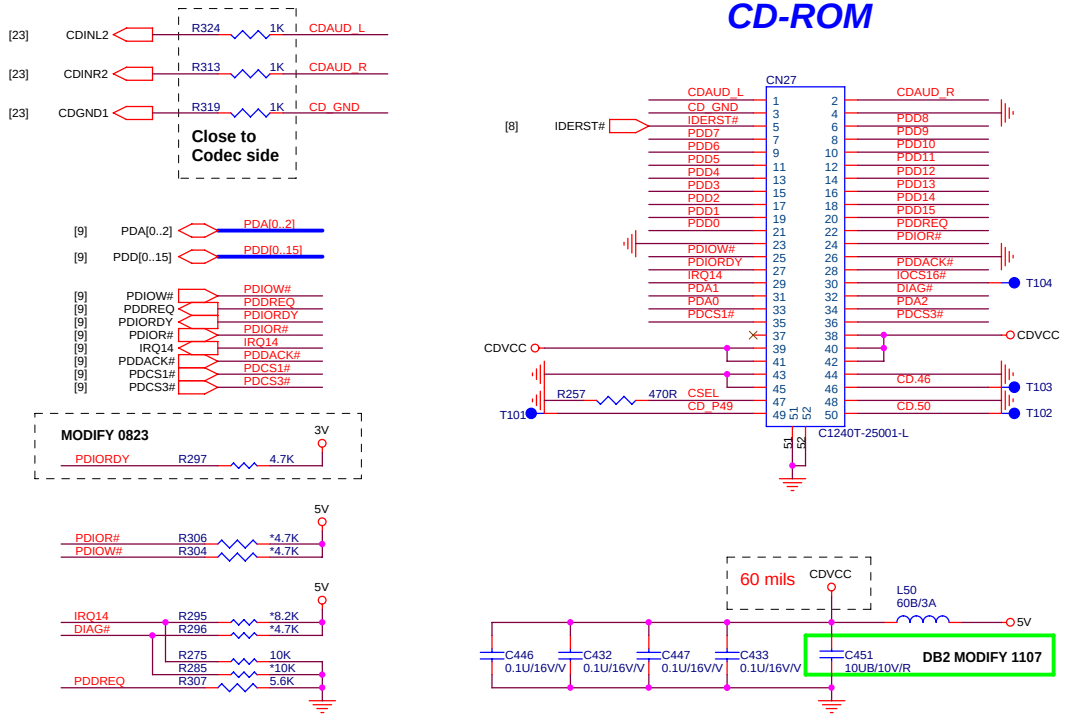

USB DIP CONNECTOR X 2

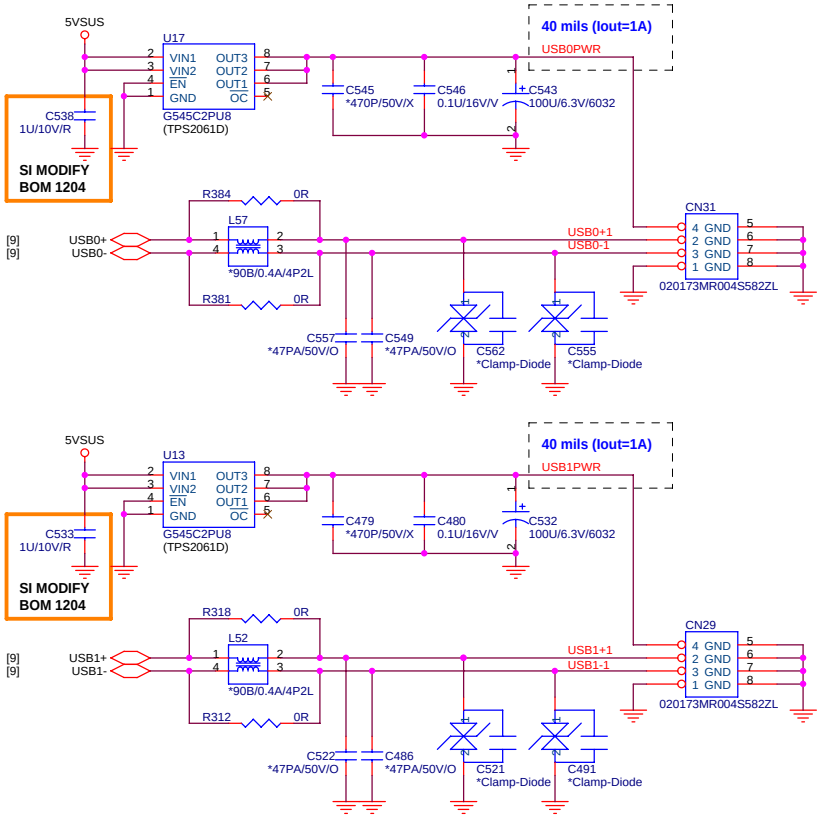

SATA_1 CONNECTOR

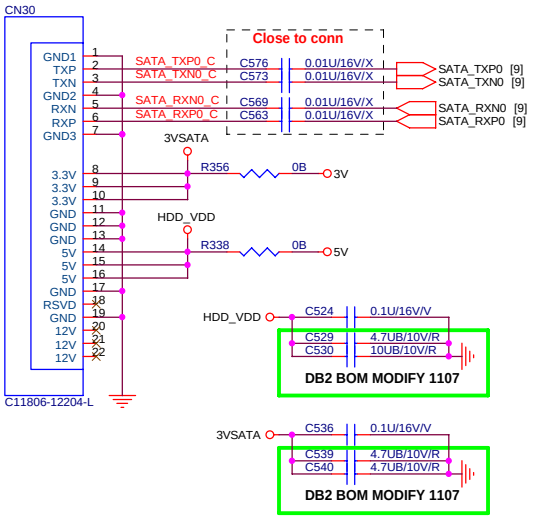

For 17"W Second HDD

SATA_2 CONNECTOR

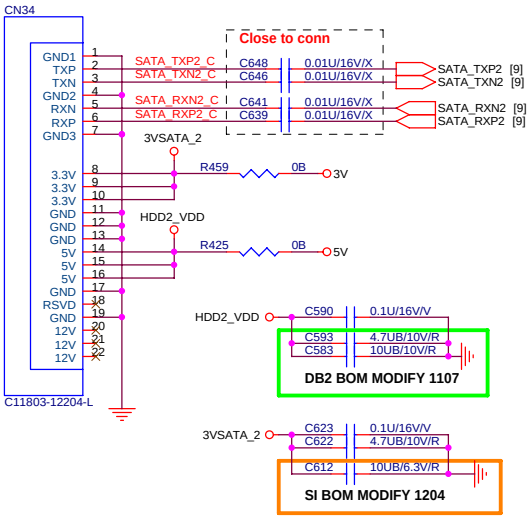

USB WIRE TO DC BOARD X 1

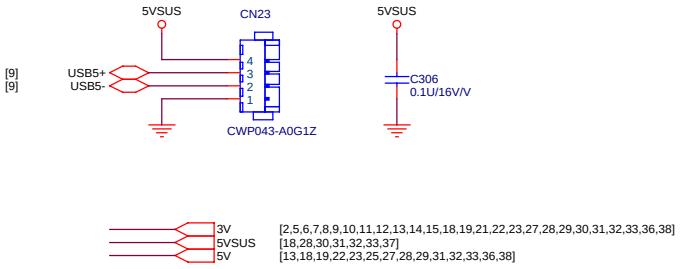

PROJECT : AT1
Quanta Computer Inc.

Size	Document Number	Rev
Custom	SATA HDDx2,CD-ROM,USBx3	C2A

NB5/RD2/HW1

Date: Wednesday, December 20, 2006 Sheet 26 of 40

WWW.AliSaler.Com

Mini PCI-E Card 1 WLAN

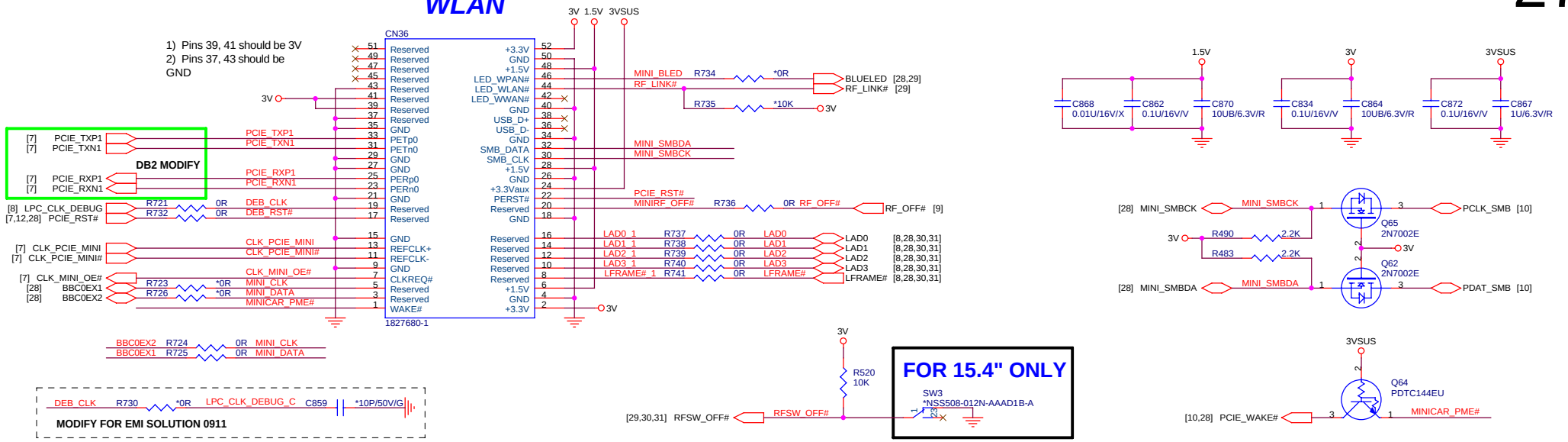

Mini PCI-E Card 2 (WWAN/SIM)

FOR 15.4" ONLY (RESERVE)

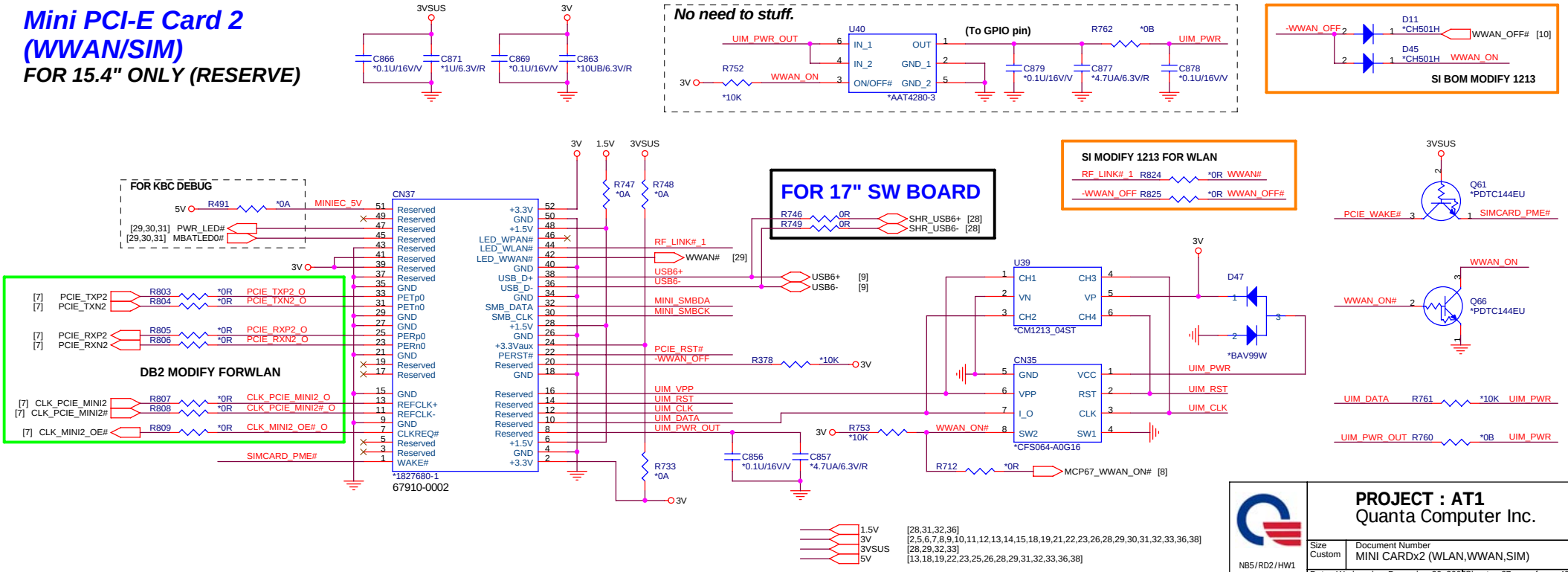

PROJECT : AT1	Quanta Computer Inc.
Size: Custom	Document Number: MINI CARDx2 (WLAN,WWAN,SIM)
Rev: C2A	
NB5/RD2/HW1	Date: Wednesday, December 20, 2006 Sheet 27 of 40

FINGER PRINT

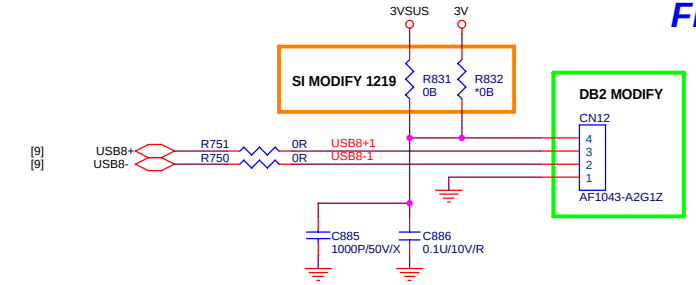

NEW CARD

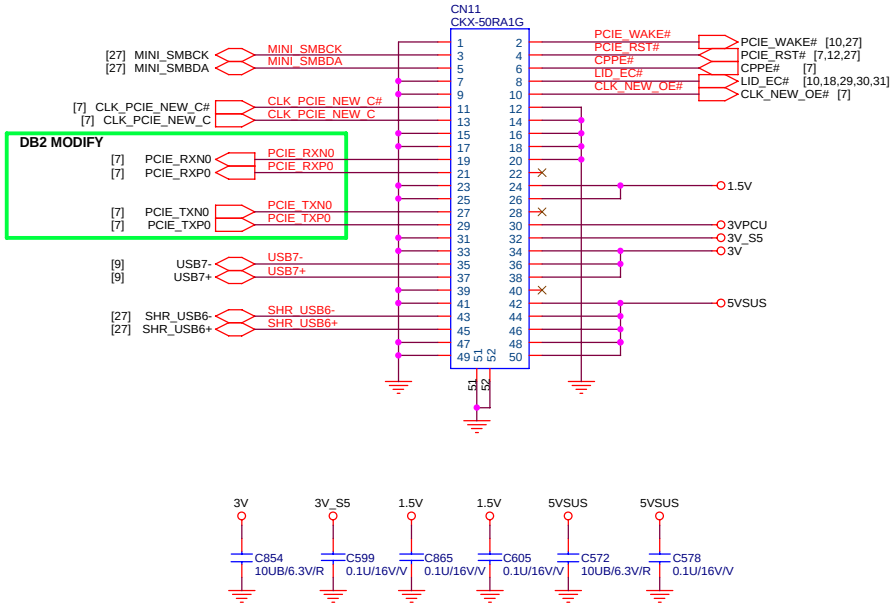

CAMERA

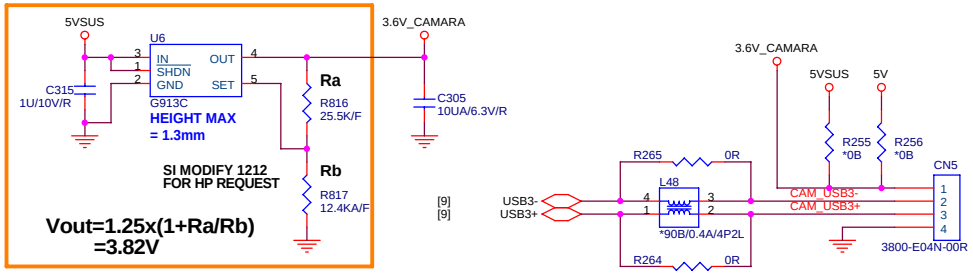

BLUETOOTH

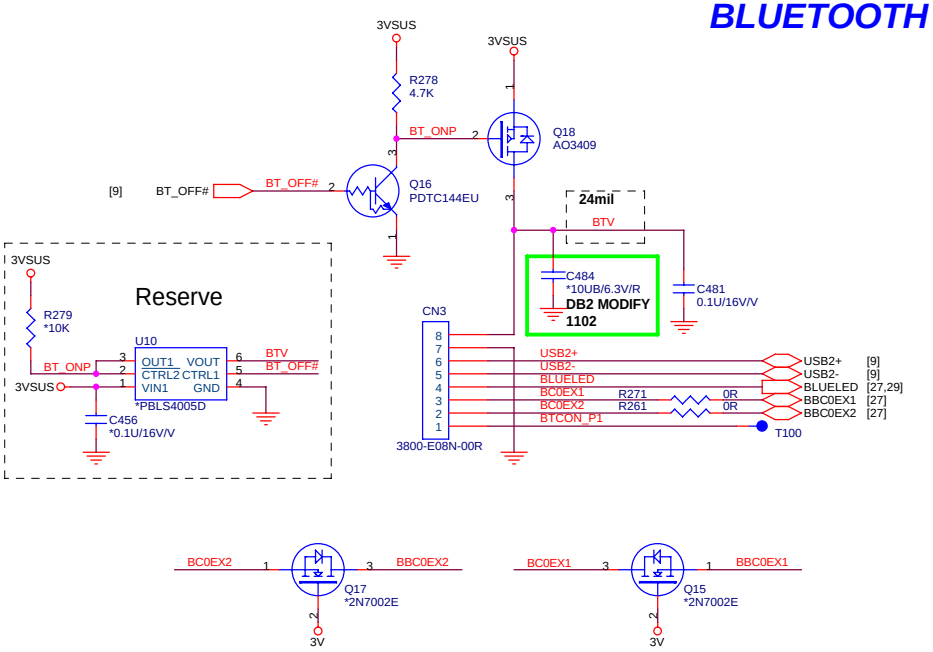

TPM (1.2)

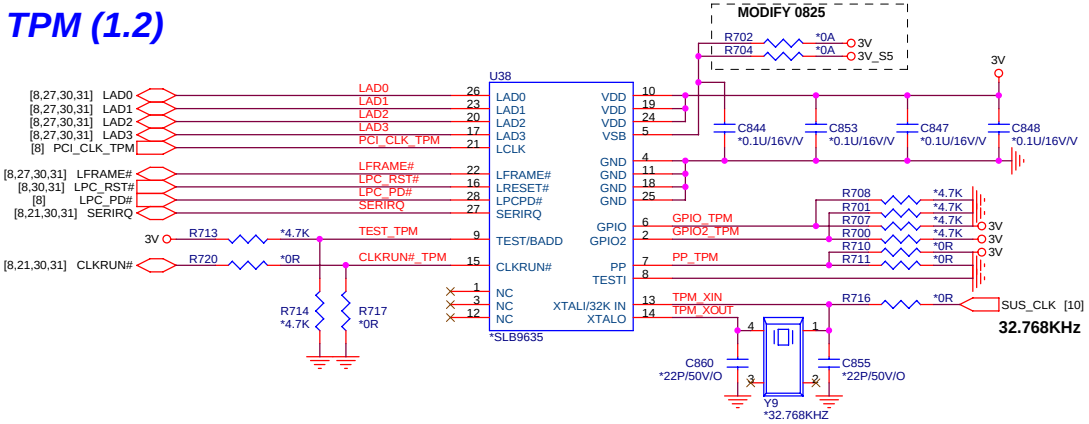

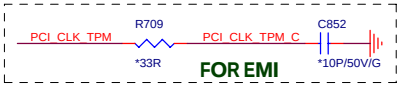

Address

	BADD
HIGH	4EH/4F (dafault)
LOW	2EH/2FH

*** DEFAULT**

PP (PHYSICAL PRESENCE)	
*L	PLATFORM PROTECT
H	USER ACCESS

1.5V	[27,31,32,36]
3V	[2,5,6,7,8,9,10,11,12,13,14,15,18,19,21,22,23,26,27,29,30,31,32,33,36,38]
3VSUS	[27,29,32,33]
3V_S5	[8,9,10,11,20,30,32,33,37]
3VPCU	[9,14,18,29,30,31,33,34,35]
5V	[13,18,19,22,23,25,26,27,29,31,32,33,36,38]
5VSUS	[18,26,30,31,32,33,37]

NB5/RD2/HW1

PROJECT : AT1
Quanta Computer Inc.

Size	Document Number	Rev
Custom	NEW CARD,CAMER,TPM,F/P,B/T	C2A

Date: Wednesday, December 20, 2006 Sheet 28 of 40

WWW.AliSaler.Com

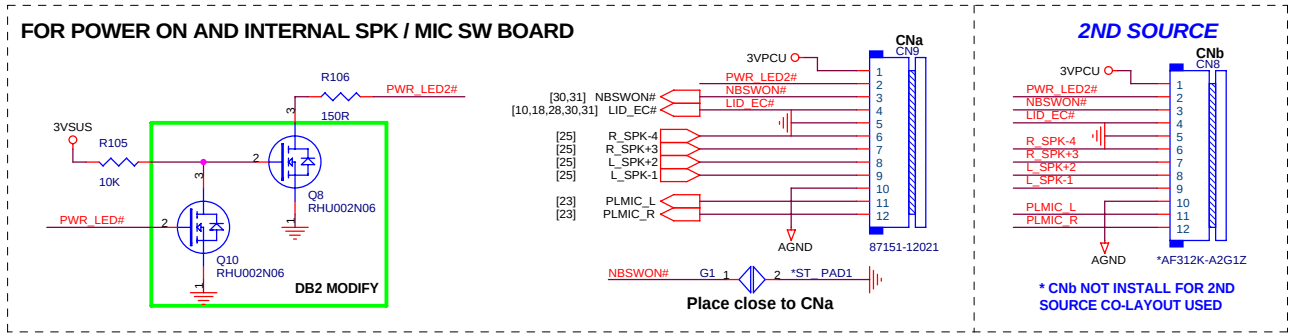

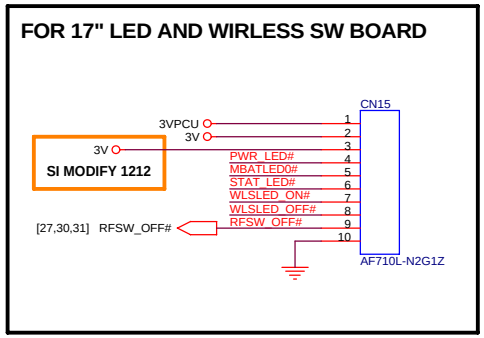

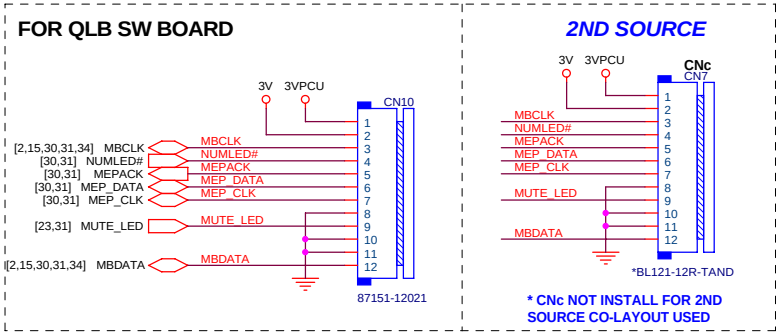

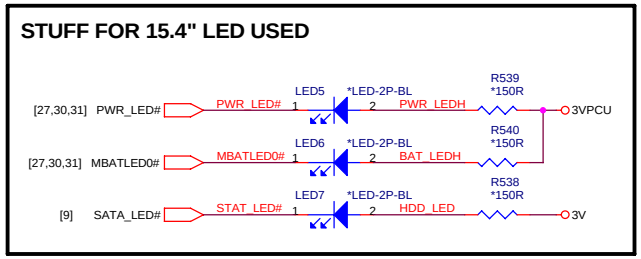

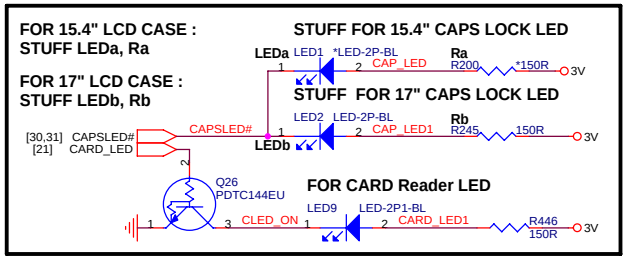

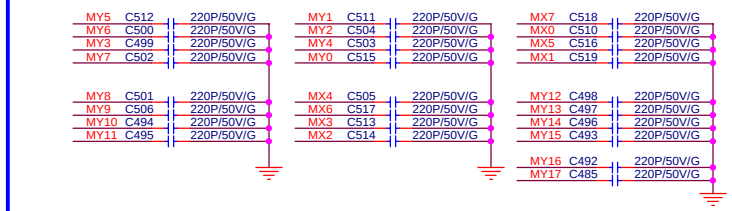

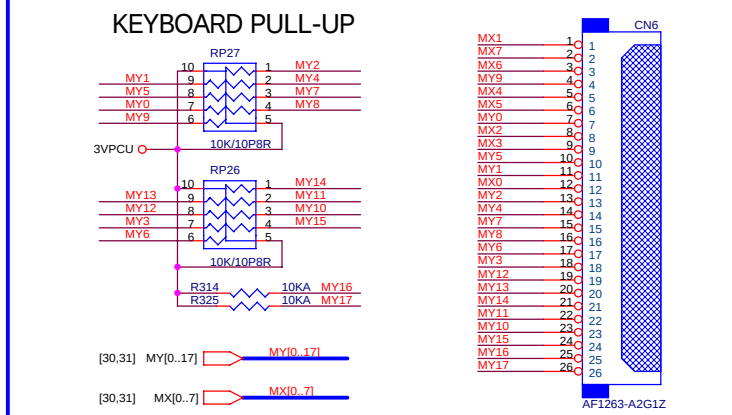

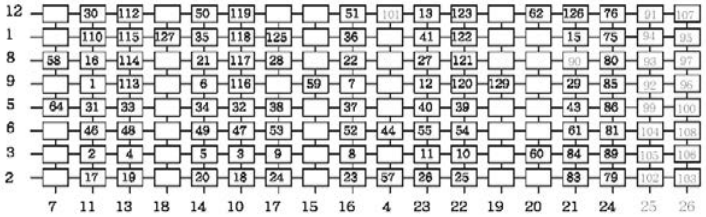

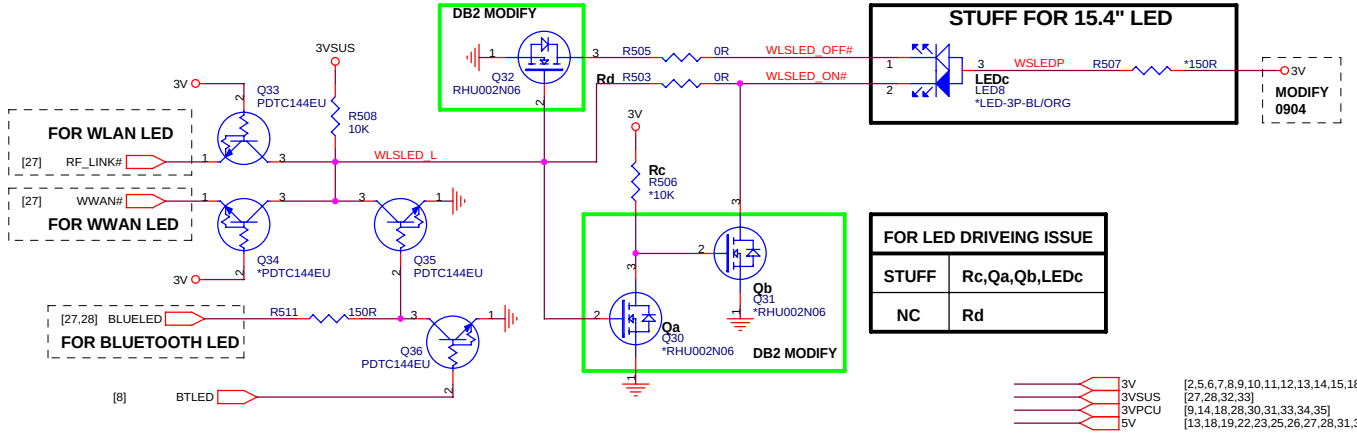

FOR LED DRIVEING ISSUE	
STUFF	Rc,Qa,Qb,LEDc
NC	Rd

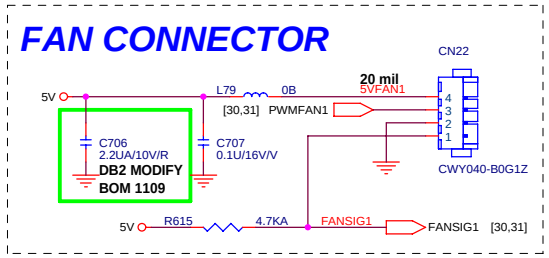

3V	[2,5,6,7,8,9,10,11,12,13,14,15,18,19,21,22,23,26,27,28,30,31,32,33,36,38]
3VSUS	[27,28,32,33]
3VPCU	[9,14,18,28,30,31,33,34,35]
5V	[13,18,19,22,23,25,26,27,28,31,32,33,36,38]

NB5/RD2/HW1

PROJECT : AT1
Quanta Computer Inc.

Size	Document Number	Rev
Custom	KB,FAN,LED,SW (PWR,QLB,LED)	C2A

Date: Wednesday, December 20, 2006 Sheet 29 of 40

EC - KB3920

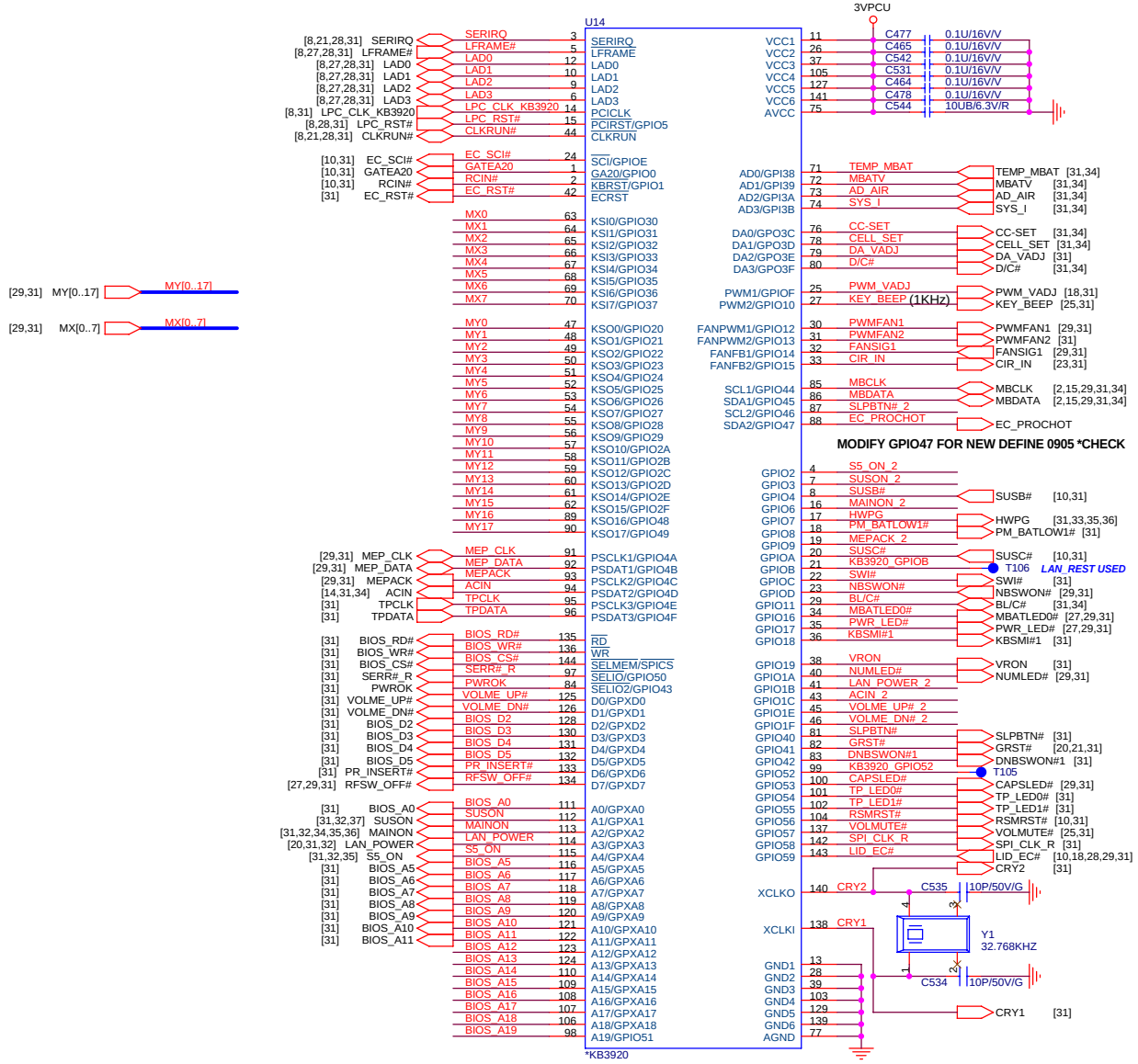

IF USED KB3920 : Ra stuff 0 ohm

IF USED KB3926 : Ra leave NC

STRAP PIN (*INTERNAL PULL-UP)

MY0	47	TP_TEST: Clock Test Mode Low: Test Mode. HIGH: *32kHz clock in normal runing	MY2	49	TP_SPI: Default flash access Low: Boot from SPI flash part HIGH: *Boot from ISA flash part
MY1	48	TP_PLL: DPLL Test Mode Low: Test Mode. HIGH: *Normal operation	MY3	50	TP_ISP: In System Programming Mode Low: ISP mode HIGH: *Normal Mode

SI STUFF SPI ROM

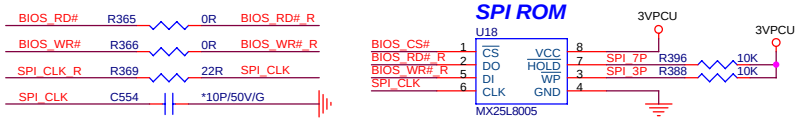

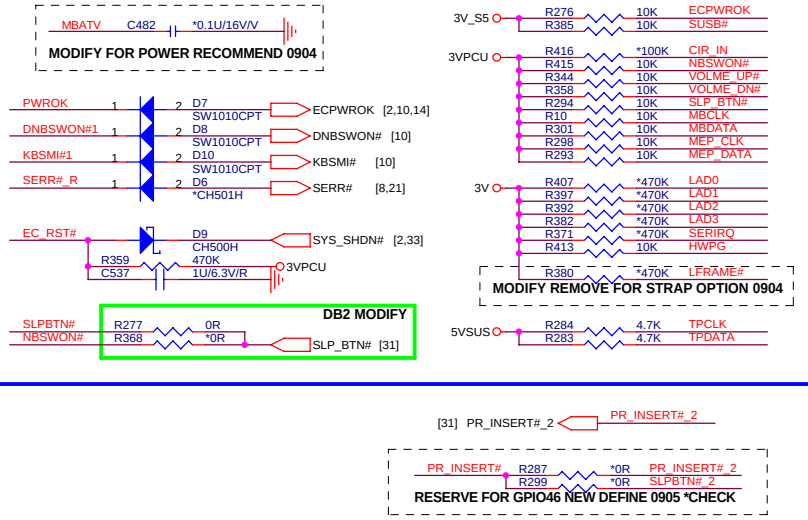

DB2 MODIFY

3V	[2,5,6,7,8,9,10,11,12,13,14,15,18,19,21,22,23,26,27,28,29,31,32,33,36,38]
3V_S5	[8,9,10,11,20,28,32,33,37]
3VPCU	[9,14,18,28,29,31,33,34,35]
5VSUS	[18,26,28,31,32,33,37]

PROJECT : AT1
Quanta Computer Inc.

Size	Document Number	Rev
Custom	KB3920,SPI_ROM	C2A

Date: Wednesday, December 20, 2006 Sheet 30 of 40

NB5/RD2/HW1

WWW.AliSaler.Com

EC - KB3926

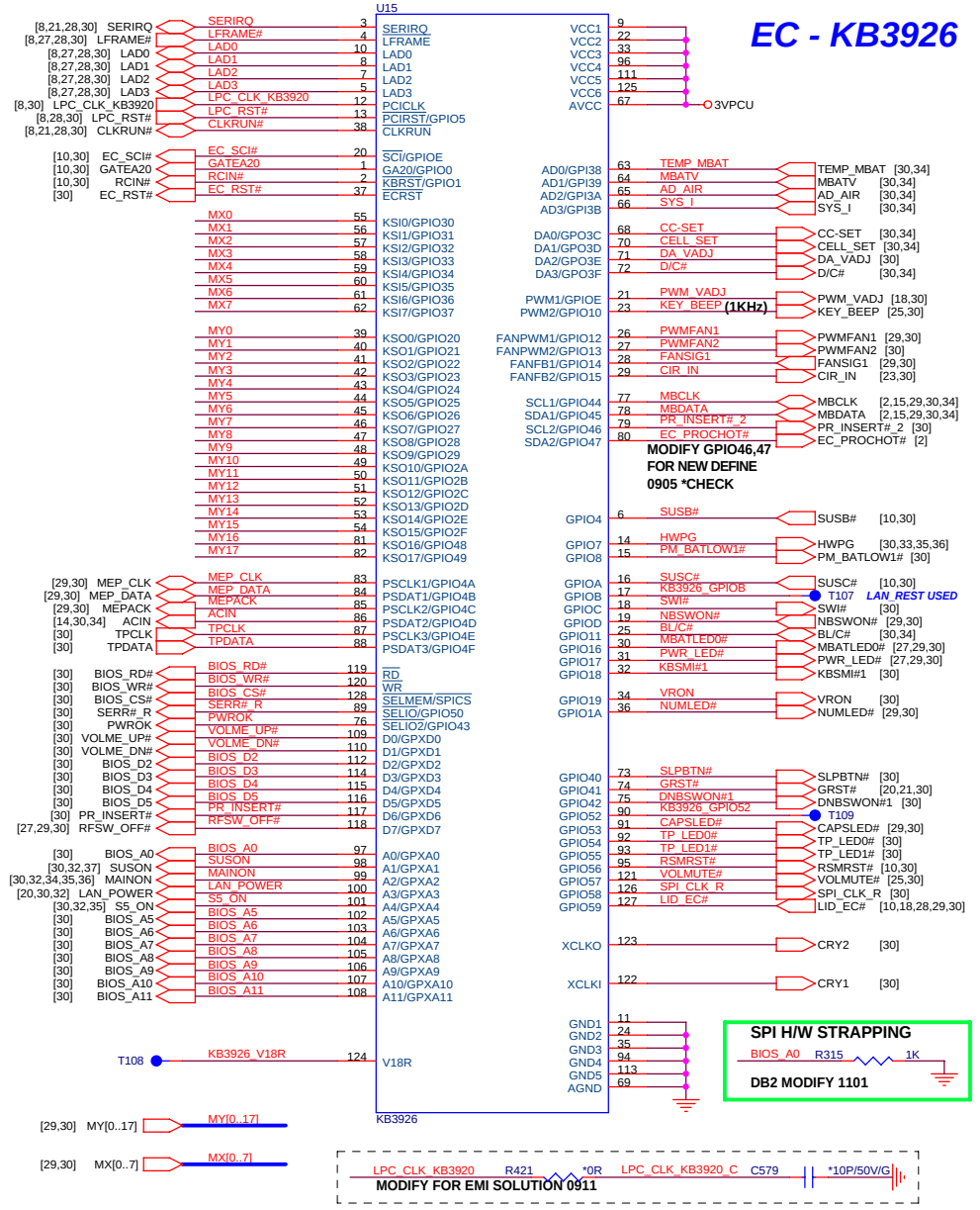

CABLE DOCK

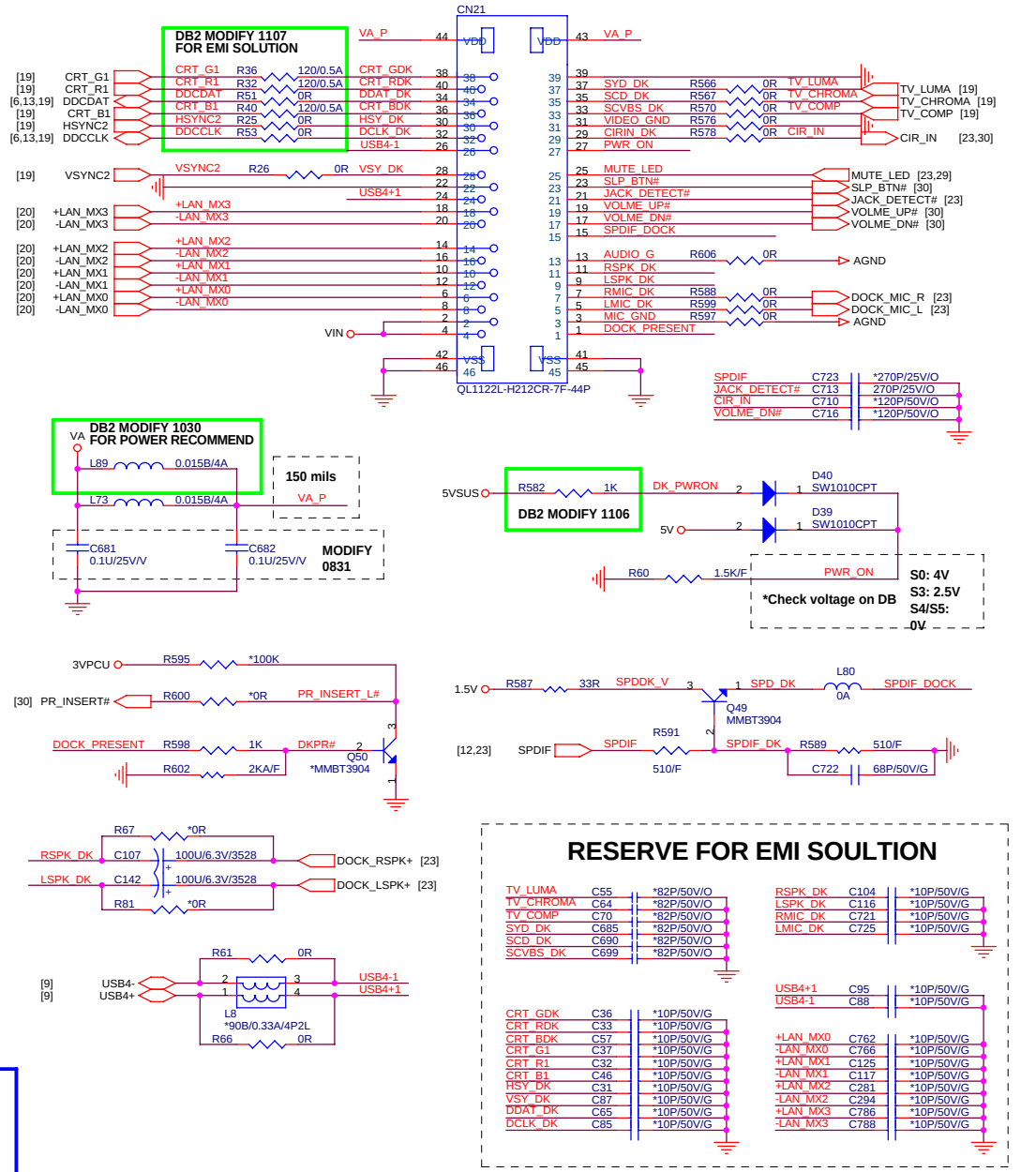

RESERVE FOR EMI SOULTION

TV_LUMA	C55	*82P/50V/O
TV_CHROMA	C64	*82P/50V/O
TV_COMP	C70	*82P/50V/O
SYD_DK	C685	*82P/50V/O
SCD_DK	C690	*82P/50V/O
SCVBS_DK	C699	*82P/50V/O
RSPK_DK	C104	*10P/50V/G
LSPK_DK	C116	*10P/50V/G
RMIC_DK	C721	*10P/50V/G
LMIC_DK	C725	*10P/50V/G
USB4+1	C95	*10P/50V/G
USB4-1	C88	*10P/50V/G
CRT_GDK	C36	*10P/50V/G
CRT_RDK	C33	*10P/50V/G
CRT_BDK	C57	*10P/50V/G
CRT_G1	C37	*10P/50V/G
CRT_R1	C32	*10P/50V/G
CRT_B1	C46	*10P/50V/G
HSY_DK	C31	*10P/50V/G
VSY_DK	C87	*10P/50V/G
DDAT_DK	C65	*10P/50V/G
DCLK_DK	C85	*10P/50V/G
+LAN_MX0	C762	*10P/50V/G
-LAN_MX0	C766	*10P/50V/G
+LAN_MX1	C125	*10P/50V/G
-LAN_MX1	C117	*10P/50V/G
+LAN_MX2	C281	*10P/50V/G
-LAN_MX2	C294	*10P/50V/G
+LAN_MX3	C786	*10P/50V/G
-LAN_MX3	C788	*10P/50V/G

TOUCH PAD CONNECTOR

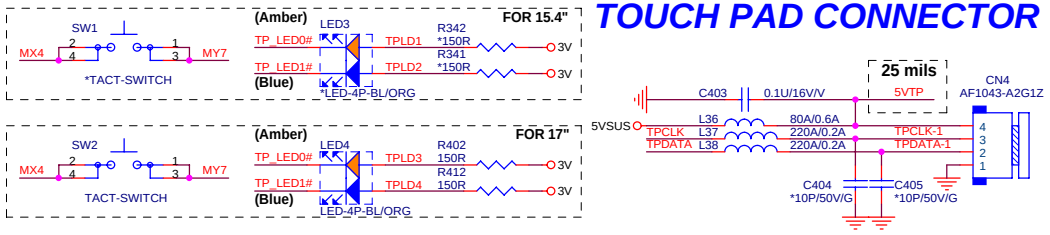

1.5V	[27,28,32,36]
3V	[2,5,6,7,8,9,10,11,12,13,14,15,18,19,21,22,23,26,27,28,29,30,32,33,36,38]
3VPCU	[9,14,18,28,29,30,33,34,35]
5VSUS	[18,26,28,30,32,33,37]
5V	[13,18,19,22,23,25,26,27,28,29,32,33,36,38]
VA	[34]
VIN	[18,32,33,34,35,36,37,38]

NB5/RD2/HW1

PROJECT : AT1
Quanta Computer Inc.

Size	Document Number	Rev
Custom	KB3926,DOCKING,TOUCH_PAD	C2A

Date: Wednesday, December 20, 2006 Sheet 31 of 40

DISCHARGE

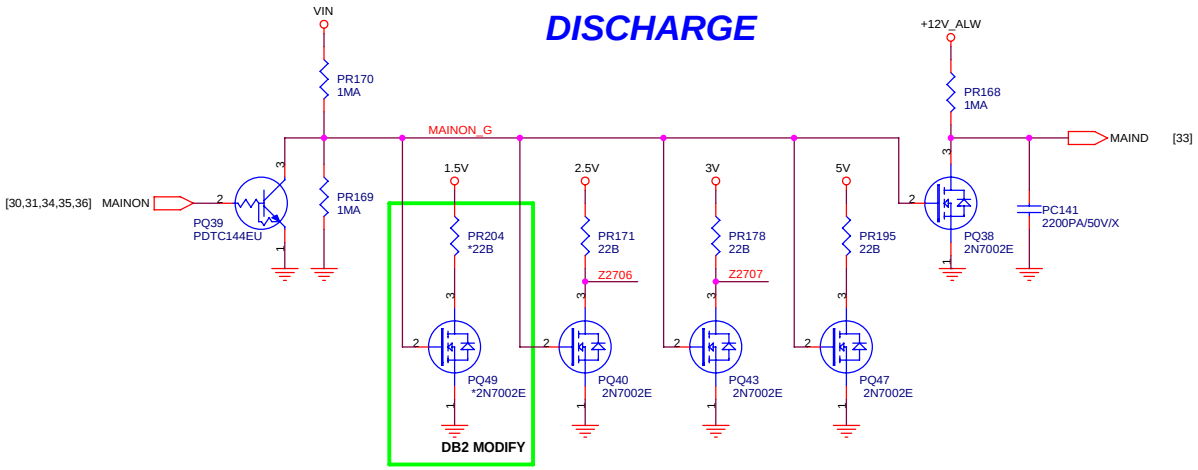

SI POWER MODIFY

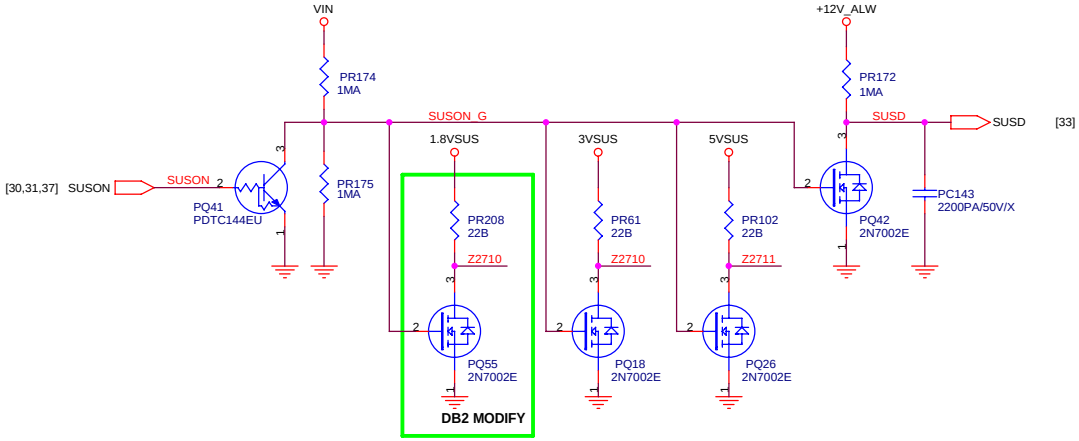

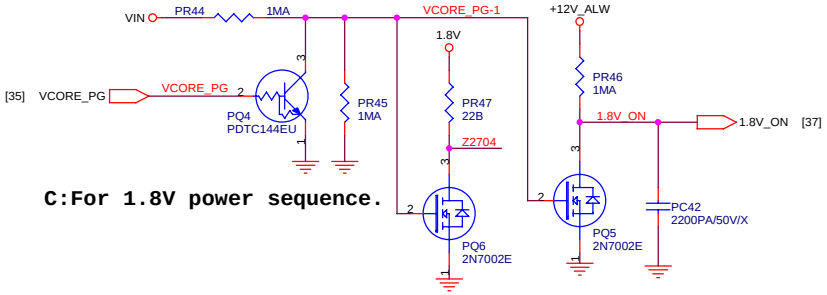

C:For 1.8V power sequence.

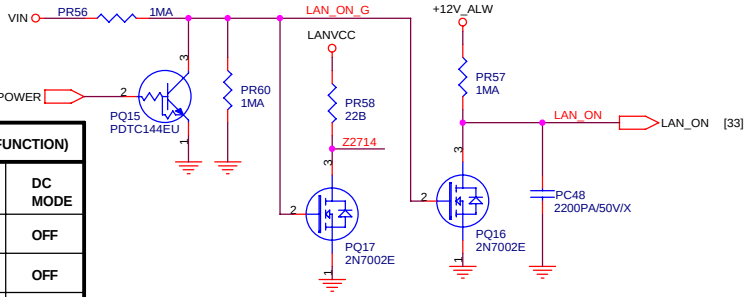

LAN_POWER (WOL FUNCTION)		
POWER STATES	AC MODE	DC MODE
S4 / S5	OFF	OFF
S3	ON	OFF
S0	ON	ON

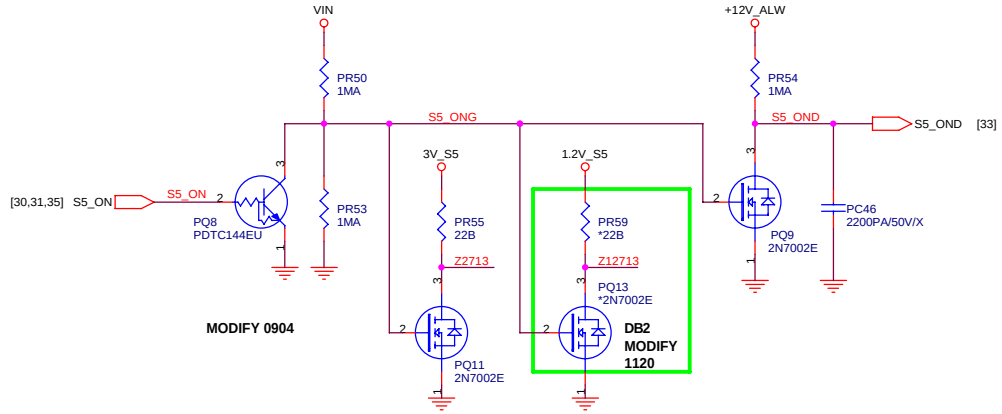

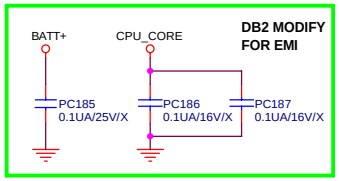

CPU_CORE	[4,38]
1.2V_S5	[10,11,35]
1.5V	[27,28,31,36]
1.8V	[11,13,15,16,17,37]
1.8VSUS	[2,3,4,5,6,36,37]
2.5V	[2,13,36]
LANVCC	[20,33]
3V	[2,5,6,7,8,9,10,11,12,13,14,15,18,19,21,22,23,26,27,28,29,30,31,33,36,38]
3VSUS	[27,28,29,33]
3V_S5	[8,9,10,11,20,28,30,33,37]
5V	[13,18,19,22,23,25,26,27,28,29,31,33,36,38]
5VSUS	[18,26,28,30,31,33,37]
+12V_ALW	[10,18,33]
VIN	[18,31,33,34,35,36,37,38]

NB5/RD2/HW1

PROJECT : AT1
Quanta Computer Inc.

Size	Document Number	Rev
Custom	DISCHARGE	C2A

Date: Wednesday, December 20, 2006 Sheet 32 of 40

WWW.AliSaler.Com

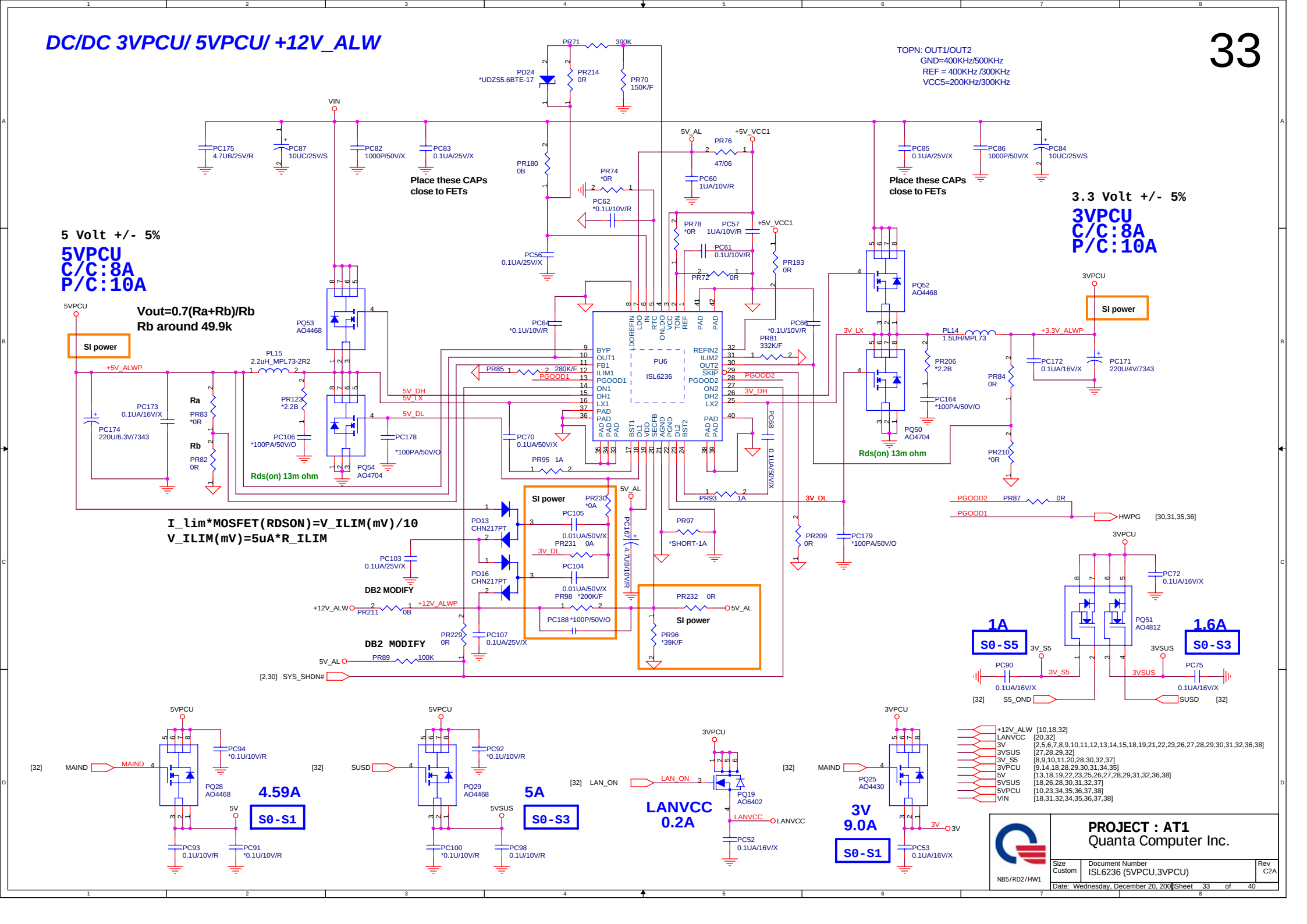

DC/DC 3VPCU/ 5VPCU/ +12V_ALW
33
TOPN: OUT1/OUT2
GND=400KHz/500KHz
REF = 400KHz /300KHz
VCC5=200KHz/300KHz
5 Volt +/- 5%
5VPCU
C/C:8A
P/C:10A
3.3 Volt +/- 5%
3VPCU
C/C:8A
P/C:10A
Vout=0.7(Ra+Rb)/Rb
Rb around 49.9k
Place these CAPs close to FETs
Place these CAPs close to FETs
SI power
SI power
SI power
SI power
Rds(on) 13m ohm
Rds(on) 13m ohm
PU6
ISL6236
I_lim*MOSFET(RDSON)=V_ILIM(mV)/10
V_ILIM(mV)=5uA*R_ILIM
DB2 MODIFY
DB2 MODIFY
1A
S0-S5
1.6A
S0-S3
4.59A
S0-S1
5A
S0-S3
LANVCC
0.2A
3V
9.0A
S0-S1
+12V_ALW [10,18,32]
LANVCC [20,32]
3V [2,5,6,7,8,9,10,11,12,13,14,15,18,19,21,22,23,26,27,28,29,30,31,32,36,38]
3VSUS [27,28,29,32]
3V_S5 [8,9,10,11,20,28,30,32,37]
3VPCU [9,14,18,28,29,30,31,34,35]
5V [13,18,19,22,23,25,26,27,28,29,31,32,36,38]
5VSUS [18,26,28,30,31,32,37]
5VPCU [10,23,34,35,36,37,38]
VIN [18,31,32,34,35,36,37,38]
PROJECT : AT1
Quanta Computer Inc.
NB5/RD2/HW1
Size Custom
Document Number ISL6236 (5VPCU,3VPCU)
Rev C2A
Date: Wednesday, December 20, 2006
Sheet 33 of 40

Adapter 19V/3.4A/65W 19V/4.75A/90W

MAX8724

Battery 6/8/12cell

FOR AT2 17"

FOR AT1 15.4"

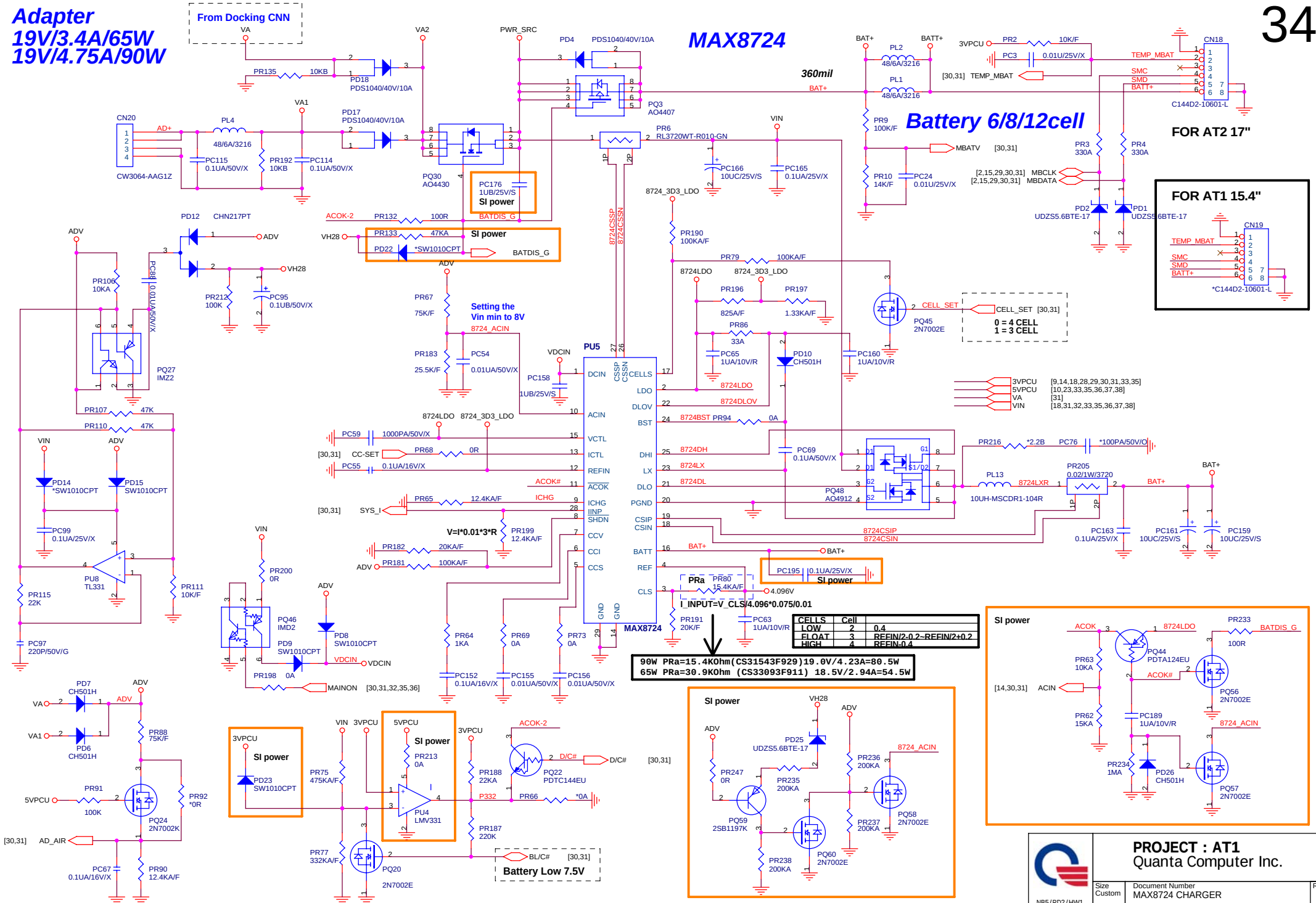

PROJECT : AT1
Quanta Computer Inc.

Size: Custom | Document Number: MAX8724 CHARGER | Rev: C2A

Date: Wednesday, December 20, 2006 | Sheet 34 of 40

NB5/RD2/HW1

WWW.AliSaler.Com

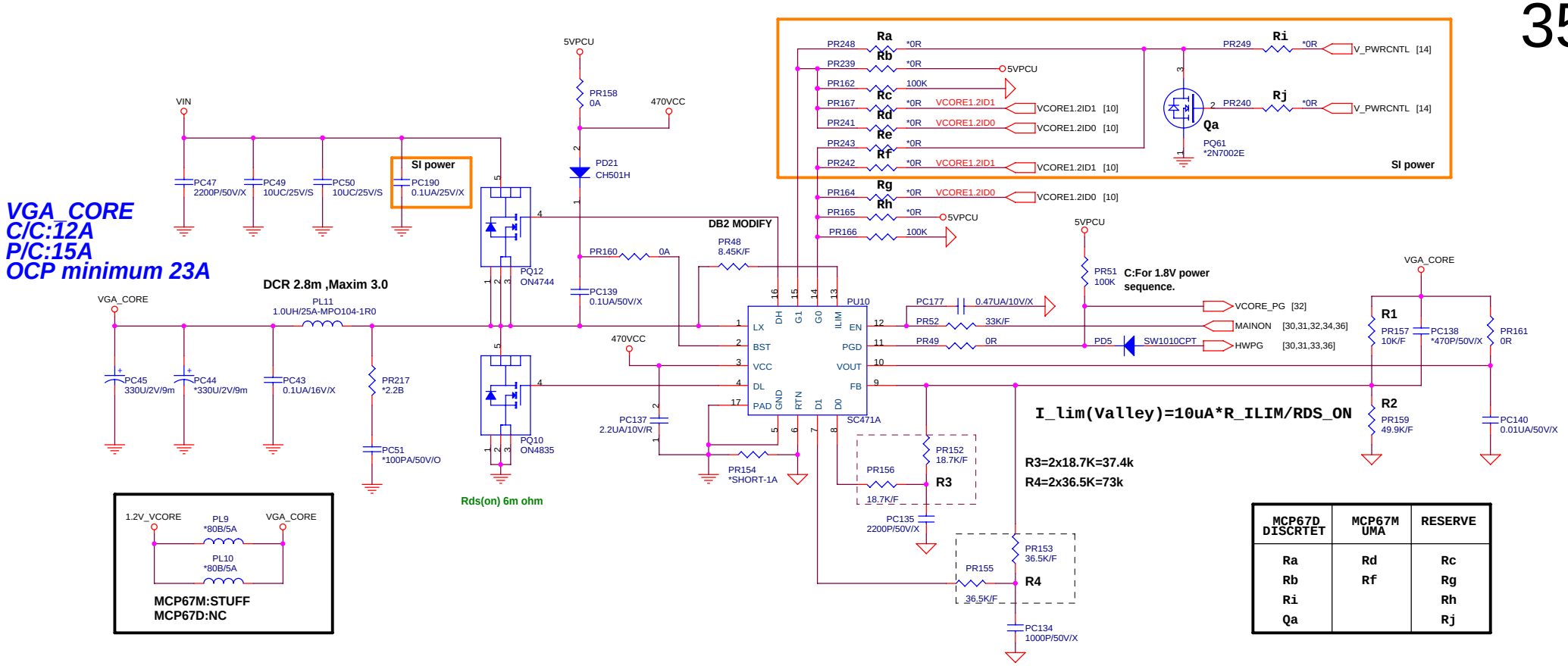

MCP67D DISCRTET	MCP67M UMA	RESERVE
Ra	Rd	Rc
Rb	Rf	Rg
Ri		Rh
Qa		Rj

INPUTS		OUTPUTS			VGA_CORE
G0	G1	OD1	OD2	OD3	
0	0	0.75x(1+R1/R2+R1/R3+R1/R4)			1.2V
0	1	0.75x(1+R1/R2+R1/R3)			1.1V
1	0	0.75x(1+R1/R2+R1/R4)			1.0V
1	1	0.75x(1+R1/R2)			0.9V

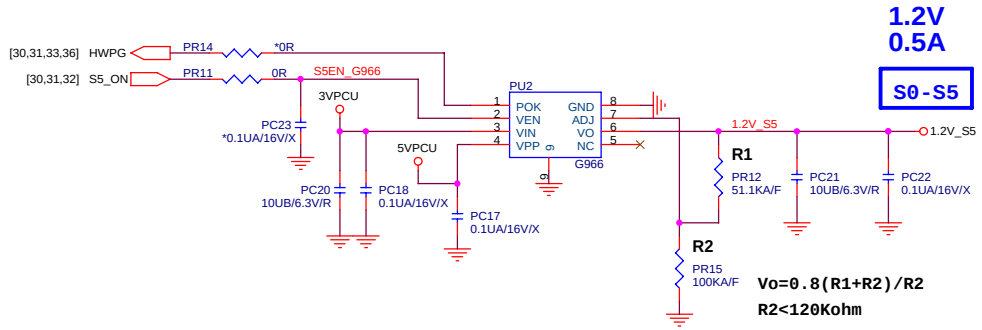

GFX_VID0
H: Normal Voltage
L: Low Voltage

VGACORECTL	NB8X	R2	R3/PR294	PR1293/PR295
HI	1.2V	CS43012FB10	NA	Mounted
LO	1.XV			

1.2V_S5 [10,11,32]
1.2V_VCORE [11,36]
VGA_CORE [12]
3VPCU [9,14,18,28,29,30,31,33,34]
5VPCU [10,23,33,34,36,37,38]
VIN [18,31,32,33,34,36,37,38]

NB5/RD2/HW1

PROJECT : AT1
Quanta Computer Inc.

Size	Document Number	Rev
Custom	SC471A (VGA_CORE),1.2V_S5	C2A

Date: Wednesday, December 20, 2006 Sheet 35 of 40

MAX1992

S0-S1

1.2V
C/C:6A
P/C:8A
OCP minimum 10A

DCR 14m ,Maxim 15mohm

VIN
PC5 *10U/C/25V/S
PC14 10U/C/25V/S
PC16 2200P/50V/X
PC15 0.1UA/25V/X
DB2 MODIFY

5VPCU
PR131 0A
PR128 20A
MAX1992VDD
MAX1992VCC
PC8 10UB/10V/R
PD3 CH501H
PC110 1UA/10V/R
MAX1992AGND
For EMI.
PR8 0A
MAX1992BST
MAX1992DH
PC6 0.1UA/50V/X
MAX1992LX
MAX1992DL
MAX1992CSP
MAX1992CSN
MAX1992FB
PU1
VDD BST DH LX DL PGND CSP CSN OUT FB
OVP/UVP VCC V+ POK LSAT SHDN AGND N.C1 GND N.C2 TON REF ILIM SKIP N.C
PR5 0R HWPG [30,31,33,35]
MAX1992SHDN#
PR129 0R MAINON [30,31,32,34,35]
PC7 *0.1U/16V/V
PR7 *0R
MAX1992REF
MAX1992ETG
PR126 35.7KA/F
PC1 1UA/10V/R
MAX1992ILIM
PR127 100KA/F
PR215 0R
PC4 470P/50V/X
PQ2 AO4468
PQ1 FDS6690AS

1.2V
PC113 330U/2V/9m
PC19 *330U/2V/9m
PC111 *1UB/25V/S
PC13 0.1UA/16V/X
Ra PR125 7.15KA/F
Rb PR124 10K/F
PC109 *100PA/50V/O
MAX1992AGND MAX1992AGND
PL3 1.5UH/MPL73
PR130 487A/F
PR218 *2.2B
PC2 0.22UA/10V/X
PC108 *100PA/50V/O
PR1 487A/F
PR222 0R

MODIFY 0825
1.2V_VCORE PL7 80B/5A 1.2V
PL6 80B/5A
MCP67M:NC
MCP67D:STUFF

Vout=0.7V(1+Ra/Rb)
Vcs=I_L(A)*L_DCR(mOHM)=V_ILIM(mV)/10

PJ1 *SHORT-1A
MAX1992AGND

[30,31,33,35] HWPG
PR189 *0R
SI POWER 5V PR186 10K
EN_G966
1.8VSUS
PC153 *0.1UA/16V/X
PU12 POK VEN VIN VPP GND ADJ VO NC G966
5V
PC151 10UB/6.3V/R
PC154 0.1UA/16V/X
PC157 0.1UA/16V/X

1.5A
S0-S1
1.5V
R1 PR201 88.7K/F
R2 PR203 100KA/F
PC170 10UB/6.3V/R
PC168 0.1UA/16V/X
Vo=0.8(R1+R2)/R2
R2<120Kohm

SI power
3V
PU13 VIN VOUT SHDN GND SET G913C
PC191 1UA/10V/R
PR244 10K
R1 PR245 100K/F
R2 PR246 100K/F
2.5V
PC192 4.7UB/10V/R
Vout=1.25(1+R1/R2)

2.5V
0.1A
S0-S1

1.2V_VCORE [11,35]
1.2V [10,11,12,13,15]
1.5V [27,28,31,32]
1.8VSUS [2,3,4,5,6,32,37]
2.5V [2,13,32]
3V [2,5,6,7,8,9,10,11,12,13,14,15,18,19,21,22,23,26,27,28,29,30,31,32,33,38]
5V [13,18,19,22,23,25,26,27,28,29,31,32,33,38]
5VPCU [10,23,33,34,35,37,38]
VIN [18,31,32,33,34,35,37,38]

PROJECT : AT1
Quanta Computer Inc.

Size	Document Number	Rev
Custom	MAX1992 (1.2V),1.5V,2.5V	C2A

NB5/RD2/HW1

Date: Wednesday, December 20, 2006 Sheet 36 of 40

WWW.AliSaler.Com

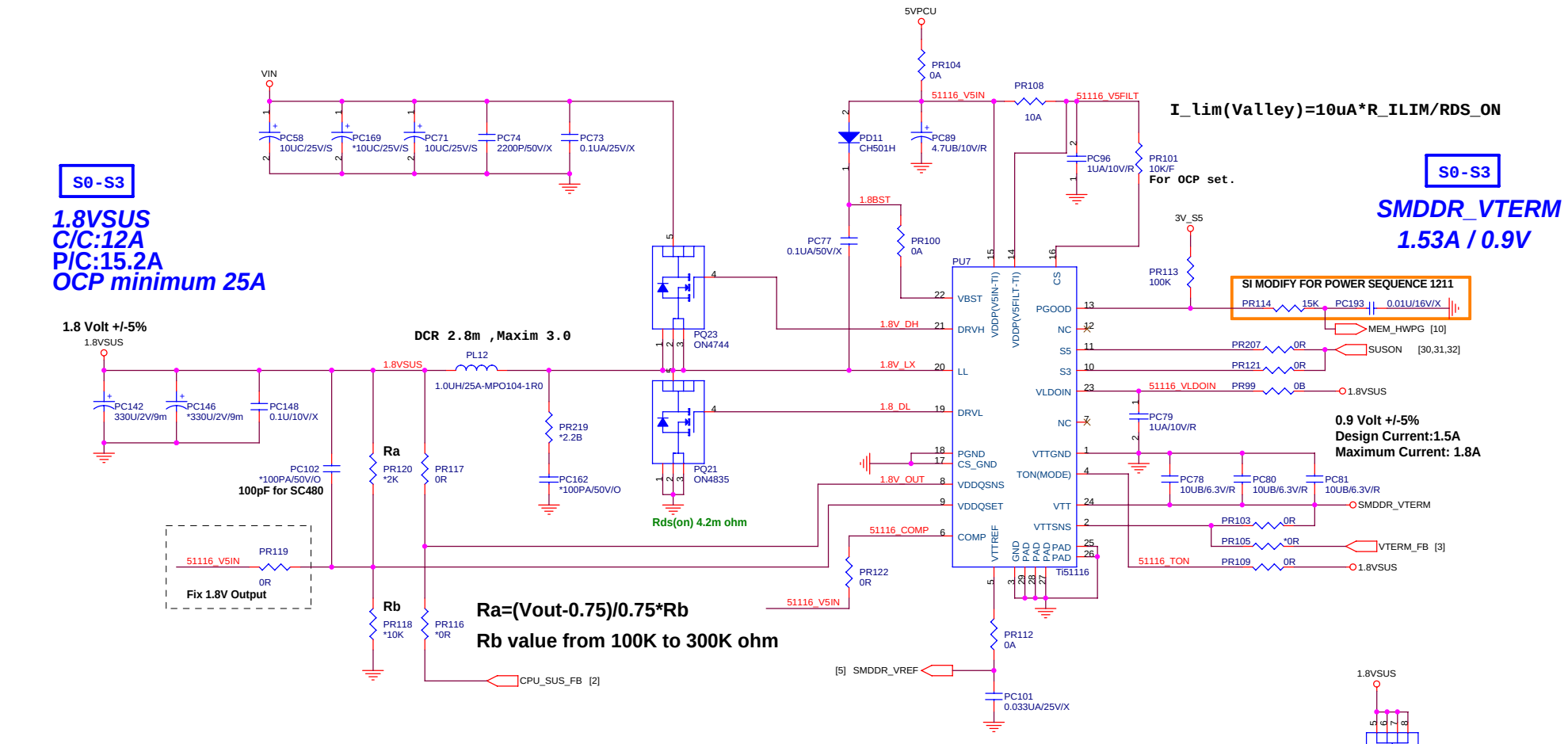

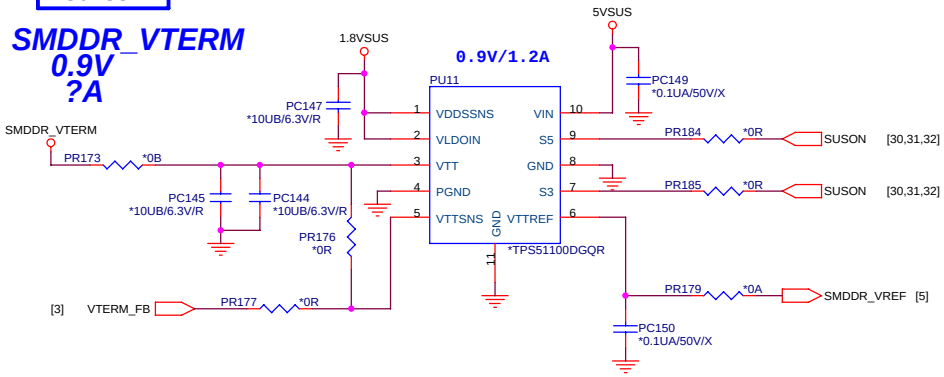

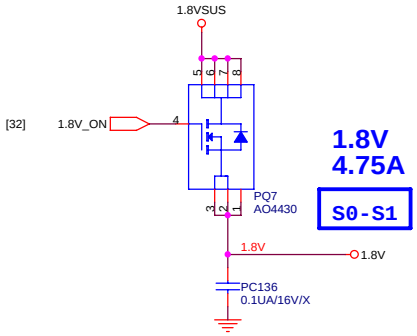

Mode	Discharge Mode
V5IN	No discharge
VDDQ	Tracking discharge
Gnd	Non-tracking discharge

V_TRIP(mV)=R_TRIP(Kohm)*10(uA)

I_OCP=V_trip/Rds_on+I_Ripple/2

VDDQSET	VDDQ(V)	VTTREF and Vtt	Note
GND	2.5	V_ vddqsns/2	DDR
V5IN	1.8	V _vddqsns/2	DDR2
FB	adjustable	V_VDDQSNS/2	1.5V<VDDQ<3V

SMDDR_VTERM	[4]
1.8V	[11,13,15,16,17,32]
1.8VSUS	[2,3,4,5,6,32,36]
3V_S5	[8,9,10,11,20,28,30,32,33]
5VSUS	[18,26,28,30,31,32,33]
5VPCU	[10,23,33,34,35,36,38]
VIN	[18,31,32,33,34,35,36,38]

PROJECT : AT1
Quanta Computer Inc.

Size	Document Number	Rev
Custom	TI51116 (1.8VSUS,VTER),1.8V	C2A

NB5/RD2/HW1

Date: Wednesday, December 20, 2006 Sheet 37 of 40

CPU_CORE MAX8774

Slew rate=(12.5mVus)*(71.5K/R_TIME)
VFB=V_VID+0.125(VREF-VOFS)
VRHOT is low when VTHRM below 1.5V
Tsw=16.26pF(R_TON+6.5K)ohm
CCV CAP=470pF*(2/total phase)*300kHZ/fsw

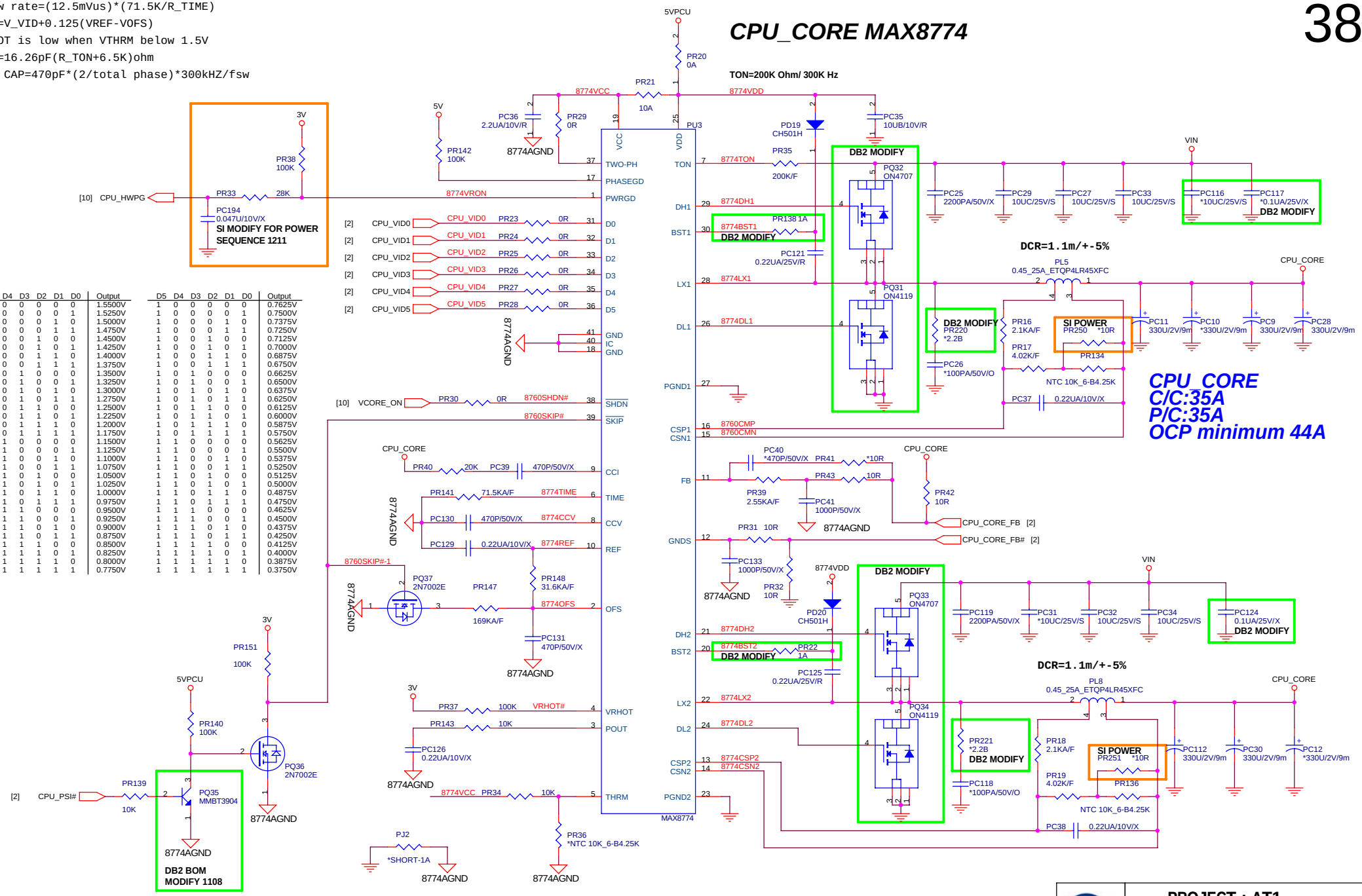

D5	D4	D3	D2	D1	D0	Output
0	0	0	0	0	0	1.5500V
0	0	0	0	0	1	1.5250V
0	0	0	0	1	0	1.5000V
0	0	0	0	1	1	1.4750V
0	0	0	1	0	0	1.4500V
0	0	0	1	0	1	1.4250V
0	0	0	1	1	0	1.4000V
0	0	0	1	1	1	1.3750V
0	0	1	0	0	0	1.3500V
0	0	1	0	0	1	1.3250V
0	0	1	0	1	0	1.3000V
0	0	1	0	1	1	1.2750V
0	0	1	1	0	0	1.2500V
0	0	1	1	0	1	1.2250V
0	0	1	1	1	0	1.2000V
0	0	1	1	1	1	1.1750V
0	1	0	0	0	0	1.1500V
0	1	0	0	0	1	1.1250V
0	1	0	0	1	0	1.1000V
0	1	0	0	1	1	1.0750V
0	1	0	1	0	0	1.0500V
0	1	0	1	0	1	1.0250V
0	1	0	1	1	0	1.0000V
0	1	0	1	1	1	0.9750V
0	1	1	0	0	0	0.9500V
0	1	1	0	0	1	0.9250V
0	1	1	0	1	0	0.9000V
0	1	1	0	1	1	0.8750V
0	1	1	1	0	0	0.8500V
0	1	1	1	0	1	0.8250V
0	1	1	1	1	0	0.8000V
0	1	1	1	1	1	0.7750V

D5	D4	D3	D2	D1	D0	Output
1	0	0	0	0	0	0.7625V
1	0	0	0	0	1	0.7500V
1	0	0	0	1	0	0.7375V
1	0	0	0	1	1	0.7250V
1	0	0	1	0	0	0.7125V
1	0	0	1	0	1	0.7000V
1	0	0	1	1	0	0.6875V
1	0	0	1	1	1	0.6750V
1	0	1	0	0	0	0.6625V
1	0	1	0	0	1	0.6500V
1	0	1	0	1	0	0.6375V
1	0	1	0	1	1	0.6250V
1	0	1	1	0	0	0.6125V
1	0	1	1	0	1	0.6000V
1	0	1	1	1	0	0.5875V
1	0	1	1	1	1	0.5750V
1	1	0	0	0	0	0.5625V
1	1	0	0	0	1	0.5500V
1	1	0	0	1	0	0.5375V
1	1	0	0	1	1	0.5250V
1	1	0	1	0	0	0.5125V
1	1	0	1	0	1	0.5000V
1	1	0	1	1	0	0.4875V
1	1	0	1	1	1	0.4750V
1	1	1	0	0	0	0.4625V
1	1	1	0	0	1	0.4500V
1	1	1	0	1	0	0.4375V
1	1	1	0	1	1	0.4250V
1	1	1	1	0	0	0.4125V
1	1	1	1	0	1	0.4000V
1	1	1	1	1	0	0.3875V
1	1	1	1	1	1	0.3750V

CPU_CORE [4,32]
3V [2,5,6,7,8,9,10,11,12,13,14,15,18,19,21,22,23,26,27,28,29,30,31,32,33,36]
5V [13,18,19,22,23,25,26,27,28,29,31,32,33,36]
5VPCU [10,23,33,34,35,36,37]
VIN [18,31,32,33,34,35,36,37]

PROJECT : AT1
Quanta Computer Inc.

Size	Document Number	Rev
Custom	MAX8774 (CPU_CORE)	C2A

Date: Wednesday, December 20, 2006 Sheet 38 of 40

NB5/RD2/HW1

WWW.AliSaler.Com