Model Name : ZIWB0/ZIWB1/ZIWE0
File Name :

Compal Confidential

ZIWB0/ZIWB1/ZIWE0 UMA M/B Schematics Document

Intel Bay Trail M

2014-02-10

REV:1.0

14PCB@
DA1 PCB

Part Number	Description
DA60013Z010	REV1.0 M/B

15PCB@
DA2 PCB

Part Number	Description
DA60013Z110	REV1.0 M/B

Security Classification	Compal Secret Data		
Issued Date	2013/04/12	Deciphered Date	2014/04/12

THIS SHEET OF ENGINEERING DRAWING IS THE PROPRIETARY PROPERTY OF COMPAL ELECTRONICS, INC. AND CONTAINS CONFIDENTIAL AND TRADE SECRET INFORMATION. THIS SHEET MAY NOT BE TRANSFERED FROM THE CUSTODY OF THE COMPETENT DIVISION OF R&D DEPARTMENT EXCEPT AS AUTHORIZED BY COMPAL ELECTRONICS, INC. NEITHER THIS SHEET NOR THE INFORMATION IT CONTAINS MAY BE USED BY OR DISCLOSED TO ANY THIRD PARTY WITHOUT PRIOR WRITTEN CONSENT OF COMPAL ELECTRONICS, INC.

Compal Electronics, Inc.

Title: *Cover Page*

Size: Custom | Document Number: *LA-B102P* | Rev: 0.2

Date: Tuesday, February 18, 2014 | Sheet 1 of 47

WWW.AliSaler.Com

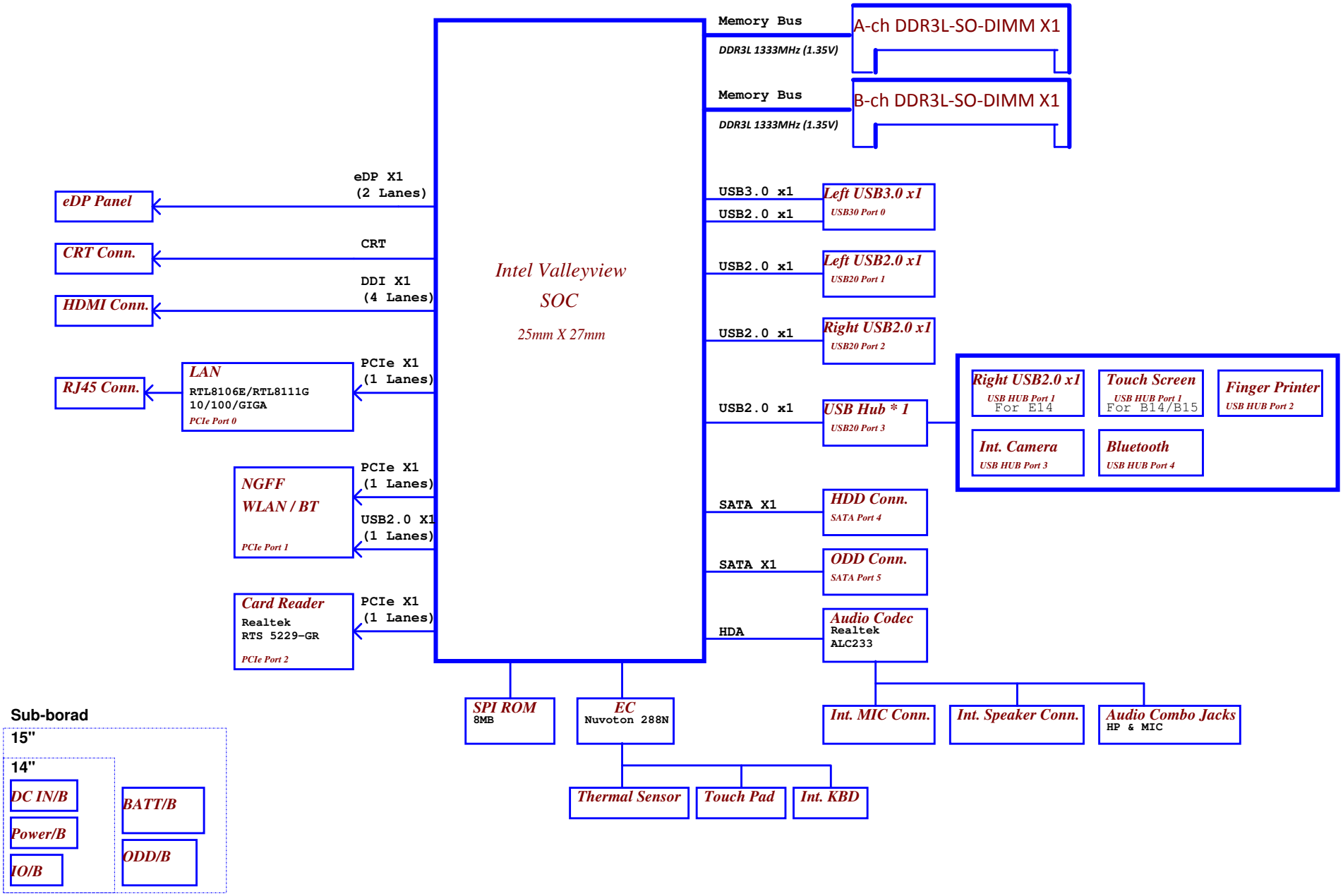

Security Classification	Compal Secret Data		
Issued Date	2013/04/12	Deciphered Date	2014/04/12

THIS SHEET OF ENGINEERING DRAWING IS THE PROPRIETARY PROPERTY OF COMPAL ELECTRONICS, INC. AND CONTAINS CONFIDENTIAL AND TRADE SECRET INFORMATION. THIS SHEET MAY NOT BE TRANSFERED FROM THE CUSTODY OF THE COMPETENT DIVISION OF R&D DEPARTMENT EXCEPT AS AUTHORIZED BY COMPAL ELECTRONICS, INC. NEITHER THIS SHEET NOR THE INFORMATION IT CONTAINS MAY BE USED BY OR DISCLOSED TO ANY THIRD PARTY WITHOUT PRIOR WRITTEN CONSENT OF COMPAL ELECTRONICS, INC.

Compal Electronics, Inc.

Title: Block Diagrams

Size: Custom | Document Number: Intel BayTrail-M Platform | Rev: 0.2

Date: Tuesday, February 18, 2014 | Sheet 2 of 47

WWW.AliSaler.Com

Voltage Rails

Power Plane	Description	S0	S3	S4/S5
VIN	19V Adapter power supply	ON	ON	ON
BATT+	12V Battery power supply	ON	ON	ON
B+	AC or battery power rail for power circuit. (19V/12V)	ON	ON	ON
+RTCVCC	RTC Battery Power	ON	ON	ON
+1.0VALW	+1.0v Always power rail	ON	ON	ON
+1.8VALW	+1.8v Always power rail	ON	ON	ON
+3VALW	+3.3v Always power rail	ON	ON	ON
+5VALW	+5.0v Always power rail	ON	ON	ON
+1.35V	+1.35V power rail for DDR3L	ON	ON	OFF
+SOC_VCC	Core voltage for SOC	ON	OFF	OFF
+SOC_VNN	GFX voltage for SOC	ON	OFF	OFF
+0.675VS	+0.675V power rail for DDR3L Terminator	ON	OFF	OFF
+1.0VS	+1.0v system power rail	ON	OFF	OFF
+1.05VS	+1.05v system power rail	ON	OFF	OFF
+1.35VS	+1.35v system power rail	ON	OFF	OFF
+1.5VS	+1.5v system power rail	ON	OFF	OFF
+1.8VS	+1.8v system power rail	ON	OFF	OFF
+3VS	+3.3v system power rail	ON	OFF	OFF
+5VS	+5.0v system power rail	ON	OFF	OFF

Note : ON* means that this power plane is ON only with AC power available, otherwise it is OFF.

Board ID / SKU ID Table for AD channel

Vcc	3.3V +/- 5%
Ra/Rc/Re	100K +/- 5%

Board ID	Rb / Rd / Rf	V_{AD_BID} min	V_{AD_BID} typ	V_{AD_BID} max
0	0	0 V	0 V	0 V
1	8.2K +/- 5%	0.216 V	0.250 V	0.289 V
2	18K +/- 5%	0.436 V	0.503 V	0.538 V
3	33K +/- 5%	0.712 V	0.819 V	0.875 V
4	56K +/- 5%	1.036 V	1.185 V	1.264 V
5	100K +/- 5%	1.453 V	1.650 V	1.759 V
6	200K +/- 5%	1.935 V	2.200 V	2.341 V
7	NC	2.500 V	3.300 V	3.300 V

BOARD ID Table

Board ID	PCB Revision
0	
1	
2	
3	
4	
5	
6	

BOM Option Table

Item	BOM Structure
Unpop	@
Connector	ME@
XDP (Debug Port)	XDP@
EMC requirement	EMC@
EMC requirement unpop	@EMC@
ESD requirement	ESD@
ESD requirement unpop	@ESD@
Touch Screen	TS@
B/E series sku	B14@
B/E series sku	B15@
B/E series sku	E14@

EC SM Bus1 address

Device	Address
Smart Battery	0001 011X b
Charger	0b00010010 (0x12H)

EC SM Bus2 address

Device	Address
GPU	0x9E
Thermal	1001_101xb

SOC SM Bus address

Device	Address
SO-DIMM A (JDIMM1)	A0h
SO-DIMM B (JDIMM2)	A2h

43 level BOM table

43 Level	Description	BOM Structure

USOC1
N2920@

S IC FH8065301616203 SR1SF B3 1.86G C38!
Part Number = SA00007E860

USOC1
N3520@

S IC FH8065301616103 SR1SE B3 2.17G C38!
Part Number = SA00007E990

USOC1
N2815@

S IC FH8065301619509 SR1SJ B3 1.86G C38!
Part Number = SA00007EO50

Security Classification	Compal Secret Data		
Issued Date	2013/04/12	Deciphered Date	2014/04/12

THIS SHEET OF ENGINEERING DRAWING IS THE PROPRIETARY PROPERTY OF COMPAL ELECTRONICS, INC. AND CONTAINS CONFIDENTIAL AND TRADE SECRET INFORMATION. THIS SHEET MAY NOT BE TRANSFERED FROM THE CUSTODY OF THE COMPETENT DIVISION OF R&D DEPARTMENT EXCEPT AS AUTHORIZED BY COMPAL ELECTRONICS, INC. NEITHER THIS SHEET NOR THE INFORMATION IT CONTAINS MAY BE USED BY OR DISCLOSED TO ANY THIRD PARTY WITHOUT PRIOR WRITTEN CONSENT OF COMPAL ELECTRONICS, INC.

Compal Electronics, Inc.

Title: Notes List

Size: Custom | Document Number: Intel BayTrail-M Platform | Rev: 0.2

Date: Tuesday, February 18, 2014 | Sheet 3 of 47

WWW.AliSaler.Com

EVT Power Sequence
2013-06-25_ AC

Security Classification	Compal Secret Data			Compal Electronics, Inc.
Issued Date	2013/04/12	Deciphered Date	2014/04/12	Title: Power Sequence

THIS SHEET OF ENGINEERING DRAWING IS THE PROPRIETARY PROPERTY OF COMPAL ELECTRONICS, INC. AND CONTAINS CONFIDENTIAL AND TRADE SECRET INFORMATION. THIS SHEET MAY NOT BE TRANSFERRED FROM THE CUSTODY OF THE COMPETENT DIVISION OF R&D DEPARTMENT EXCEPT AS AUTHORIZED BY COMPAL ELECTRONICS, INC. NEITHER THIS SHEET NOR THE INFORMATION IT CONTAINS MAY BE USED BY OR DISCLOSED TO ANY THIRD PARTY WITHOUT PRIOR WRITTEN CONSENT OF COMPAL ELECTRONICS, INC.

Size	Document Number	Rev
Custom	Intel BayTrail-M Platform	0.2

Date: Tuesday, February 18, 2014 Sheet 4 of 47

WWW.AliSaler.Com

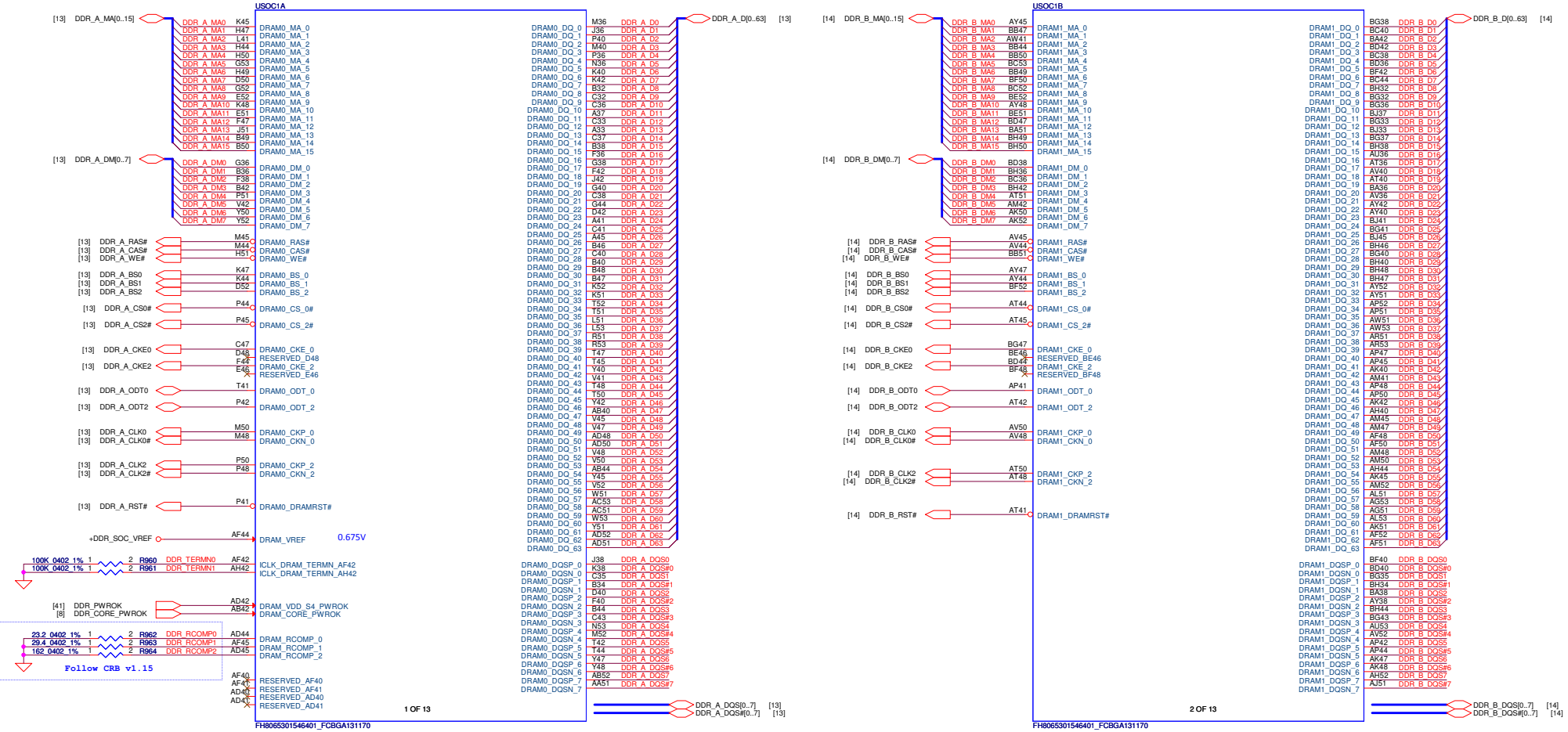

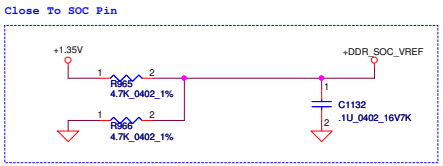

Security Classification	Compal Secret Data		
Issued Date	2013/04/12	Deciphered Date	2014/04/12

THIS SHEET OF ENGINEERING DRAWING IS THE PROPRIETARY PROPERTY OF COMPAL ELECTRONICS, INC. AND CONTAINS CONFIDENTIAL AND TRADE SECRET INFORMATION. THIS SHEET MAY NOT BE TRANSFERED FROM THE CUSTODY OF THE COMPETENT DIVISION OF R&D DEPARTMENT EXCEPT AS AUTHORIZED BY COMPAL ELECTRONICS, INC. NEITHER THIS SHEET NOR THE INFORMATION IT CONTAINS MAY BE USED BY OR DISCLOSED TO ANY THIRD PARTY WITHOUT PRIOR WRITTEN CONSENT OF COMPAL ELECTRONICS, INC.

Compal Electronics, Inc.

Title: **VLV-M SOC Memory DDR3L**

Size: Custom | Document Number: **Intel BayTrail-M Platform** | Rev: 0.2

Date: Tuesday, February 18, 2014 | Sheet 5 of 47

WWW.AliSaler.Com

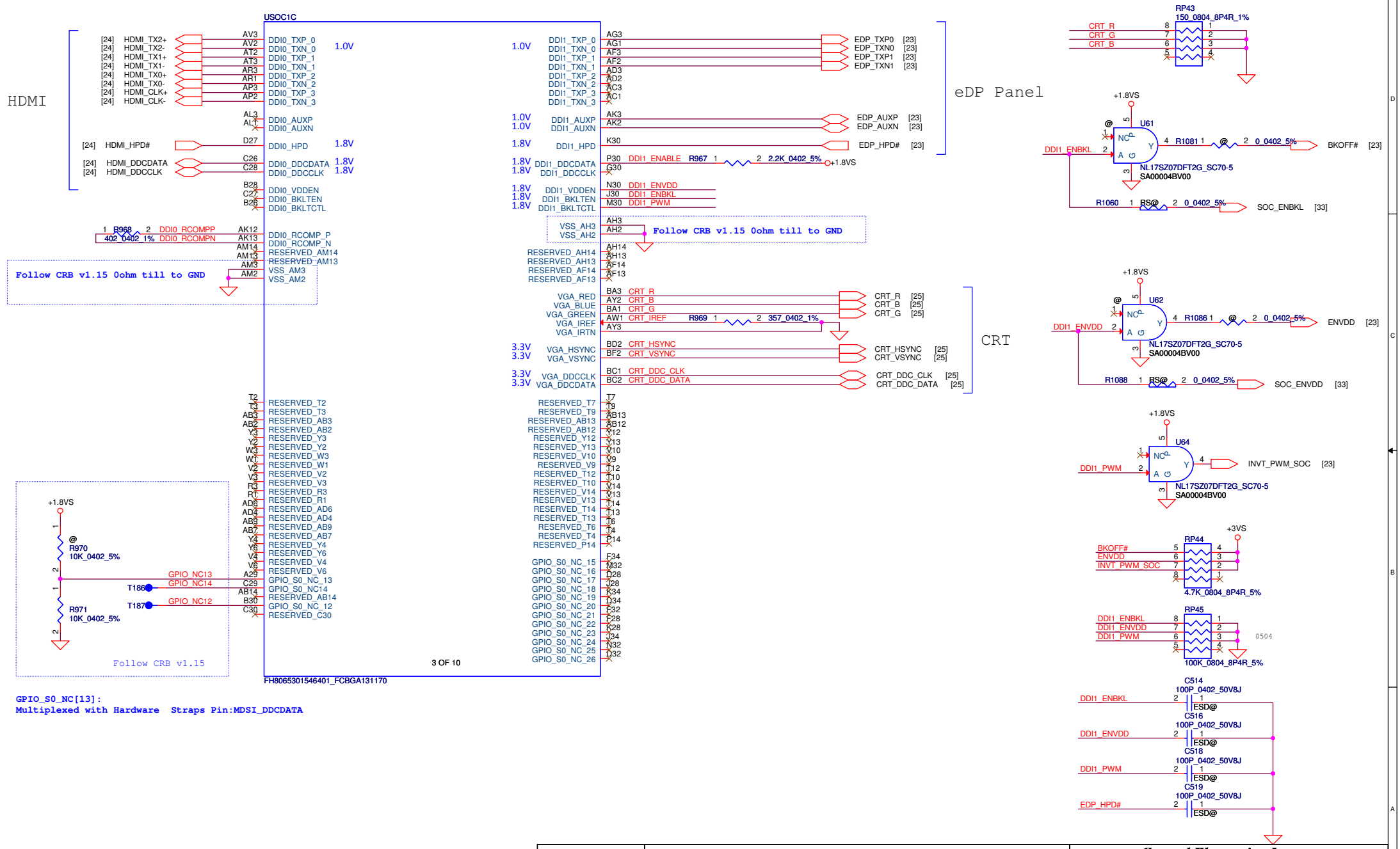

GPIO_S0_NC[13]:
Multiplexed with Hardware Straps Pin:MDSI_DDCDATA

Security Classification	Compal Secret Data		
Issued Date	2013/04/12	Deciphered Date	2014/04/12

THIS SHEET OF ENGINEERING DRAWING IS THE PROPRIETARY PROPERTY OF COMPAL ELECTRONICS, INC. AND CONTAINS CONFIDENTIAL AND TRADE SECRET INFORMATION. THIS SHEET MAY NOT BE TRANSFERED FROM THE CUSTODY OF THE COMPETENT DIVISION OF R&D DEPARTMENT EXCEPT AS AUTHORIZED BY COMPAL ELECTRONICS, INC. NEITHER THIS SHEET NOR THE INFORMATION IT CONTAINS MAY BE USED BY OR DISCLOSED TO ANY THIRD PARTY WITHOUT PRIOR WRITTEN CONSENT OF COMPAL ELECTRONICS, INC.

Compal Electronics, Inc.

Title: VLV-M SOC Display

Size: Custom | Document Number: Intel BayTrail-M Platform | Rev: 0.2

Date: Tuesday, February 18, 2014 | Sheet 6 of 47

WWW.AliSaler.Com

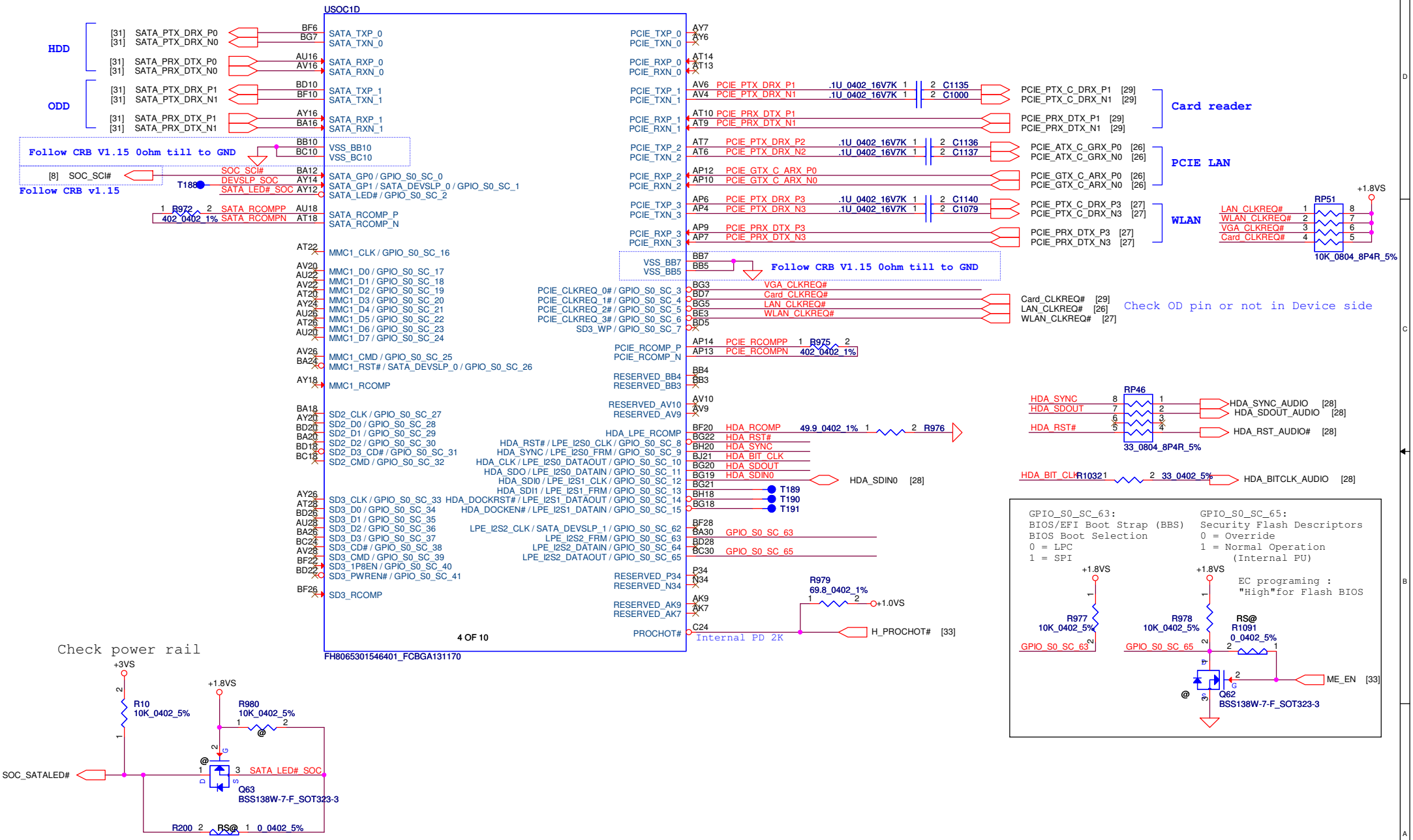

Security Classification	Compal Secret Data		
Issued Date	2013/04/12	Deciphered Date	2014/04/12

THIS SHEET OF ENGINEERING DRAWING IS THE PROPRIETARY PROPERTY OF COMPAL ELECTRONICS, INC. AND CONTAINS CONFIDENTIAL AND TRADE SECRET INFORMATION. THIS SHEET MAY NOT BE TRANSFERED FROM THE CUSTODY OF THE COMPETENT DIVISION OF R&D DEPARTMENT EXCEPT AS AUTHORIZED BY COMPAL ELECTRONICS, INC. NEITHER THIS SHEET NOR THE INFORMATION IT CONTAINS MAY BE USED BY OR DISCLOSED TO ANY THIRD PARTY WITHOUT PRIOR WRITTEN CONSENT OF COMPAL ELECTRONICS, INC.

Compal Electronics, Inc.

Title: **VLV-M SOC SATA/PCI-E/HDA**

Size: Custom | Document Number: **Intel BayTrail-M Platform** | Rev: 0.2

Date: Tuesday, February 18, 2014 | Sheet 7 of 47

WWW.AliSaler.Com

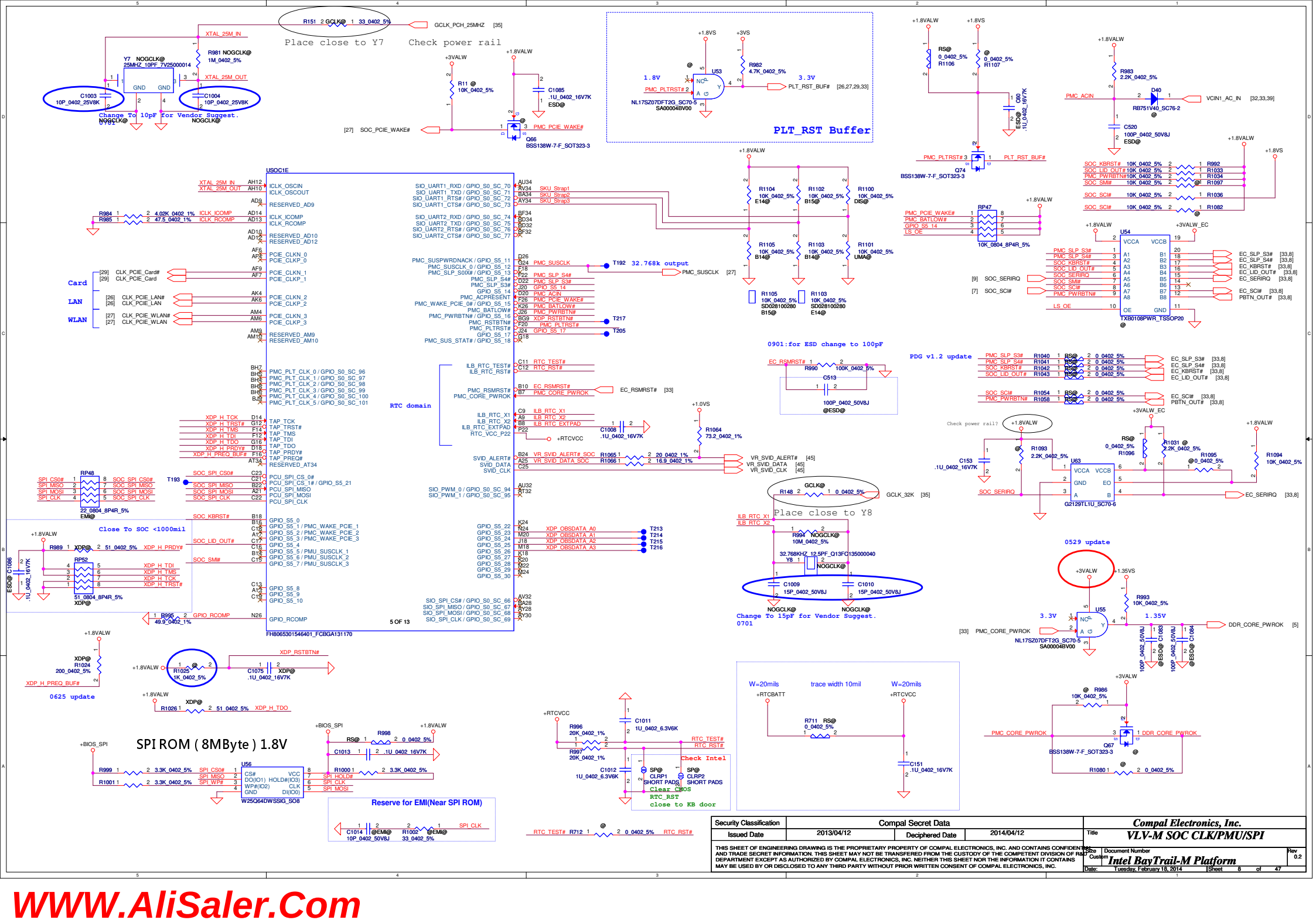

Security Classification	Compal Secret Data		
Issued Date	2013/04/12	Deciphered Date	2014/04/12

THIS SHEET OF ENGINEERING DRAWING IS THE PROPRIETARY PROPERTY OF COMPAL ELECTRONICS, INC. AND CONTAINS CONFIDENTIAL AND TRADE SECRET INFORMATION. THIS SHEET MAY NOT BE TRANSFERRED FROM THE CUSTODY OF THE COMPETENT DIVISION OF R&D DEPARTMENT EXCEPT AS AUTHORIZED BY COMPAL ELECTRONICS, INC. NEITHER THIS SHEET NOR THE INFORMATION IT CONTAINS MAY BE USED BY OR DISCLOSED TO ANY THIRD PARTY WITHOUT PRIOR WRITTEN CONSENT OF COMPAL ELECTRONICS, INC.

Compal Electronics, Inc.

Title: VLV-M SOC CLK/PMU/SPI

Size: Custom | Document Number: Intel BayTrail-M Platform | Rev: 0.2

Date: Tuesday, February 18, 2014 | Sheet 8 of 47

WWW.AliSaler.Com

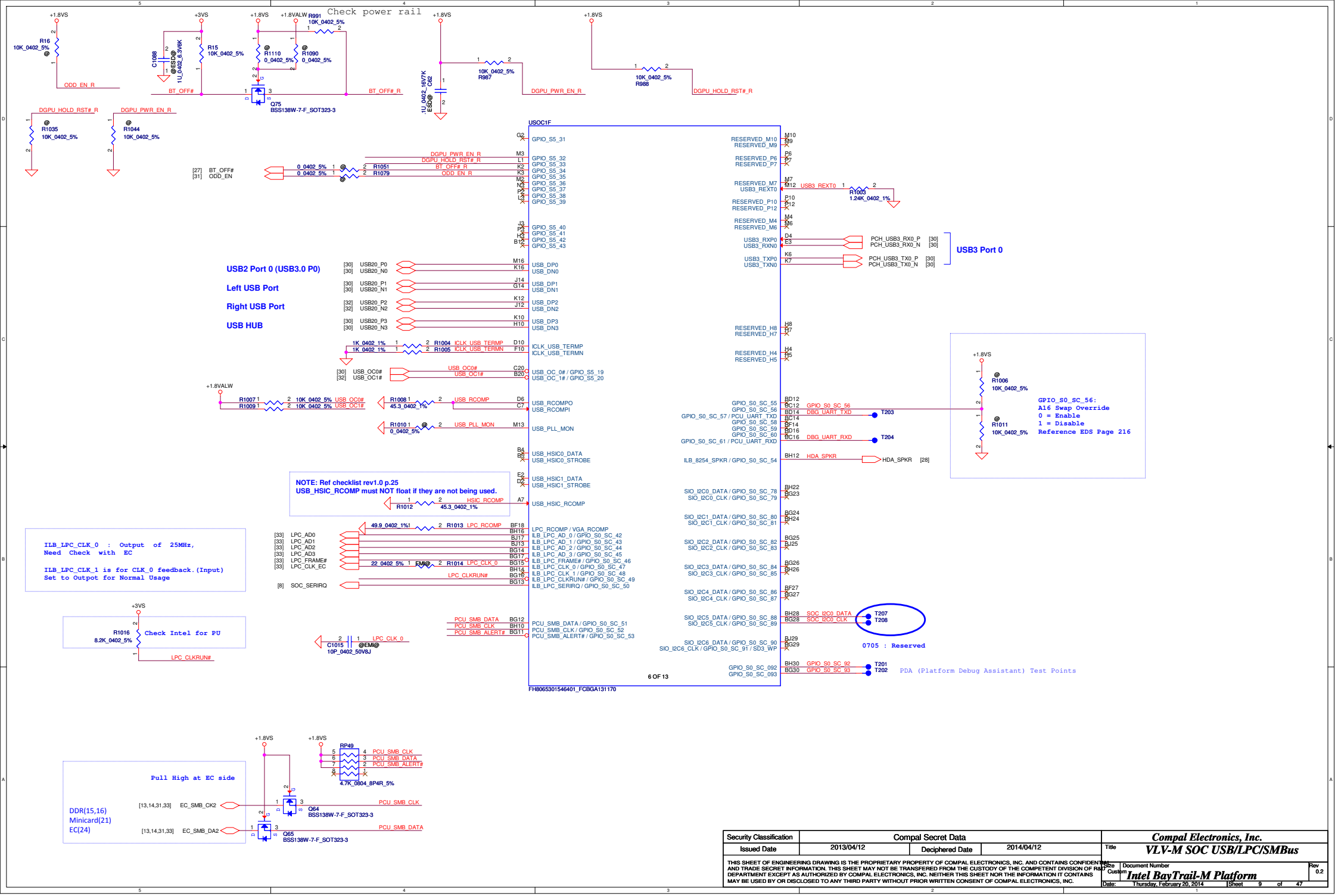

Security Classification	Compal Secret Data		
Issued Date	2013/04/12	Deciphered Date	2014/04/12

THIS SHEET OF ENGINEERING DRAWING IS THE PROPRIETARY PROPERTY OF COMPAL ELECTRONICS, INC. AND CONTAINS CONFIDENTIAL AND TRADE SECRET INFORMATION. THIS SHEET MAY NOT BE TRANSFERED FROM THE CUSTODY OF THE COMPETENT DIVISION OF R&D DEPARTMENT EXCEPT AS AUTHORIZED BY COMPAL ELECTRONICS, INC. NEITHER THIS SHEET NOR THE INFORMATION IT CONTAINS MAY BE USED BY OR DISCLOSED TO ANY THIRD PARTY WITHOUT PRIOR WRITTEN CONSENT OF COMPAL ELECTRONICS, INC.

Compal Electronics, Inc.

Title: VLV-M SOC USB/LPC/SMBus

Size: Custom | Document Number: Intel BayTrail-M Platform | Rev: 0.2

Date: Thursday, February 20, 2014 | Sheet 9 of 47

WWW.AliSaler.Com

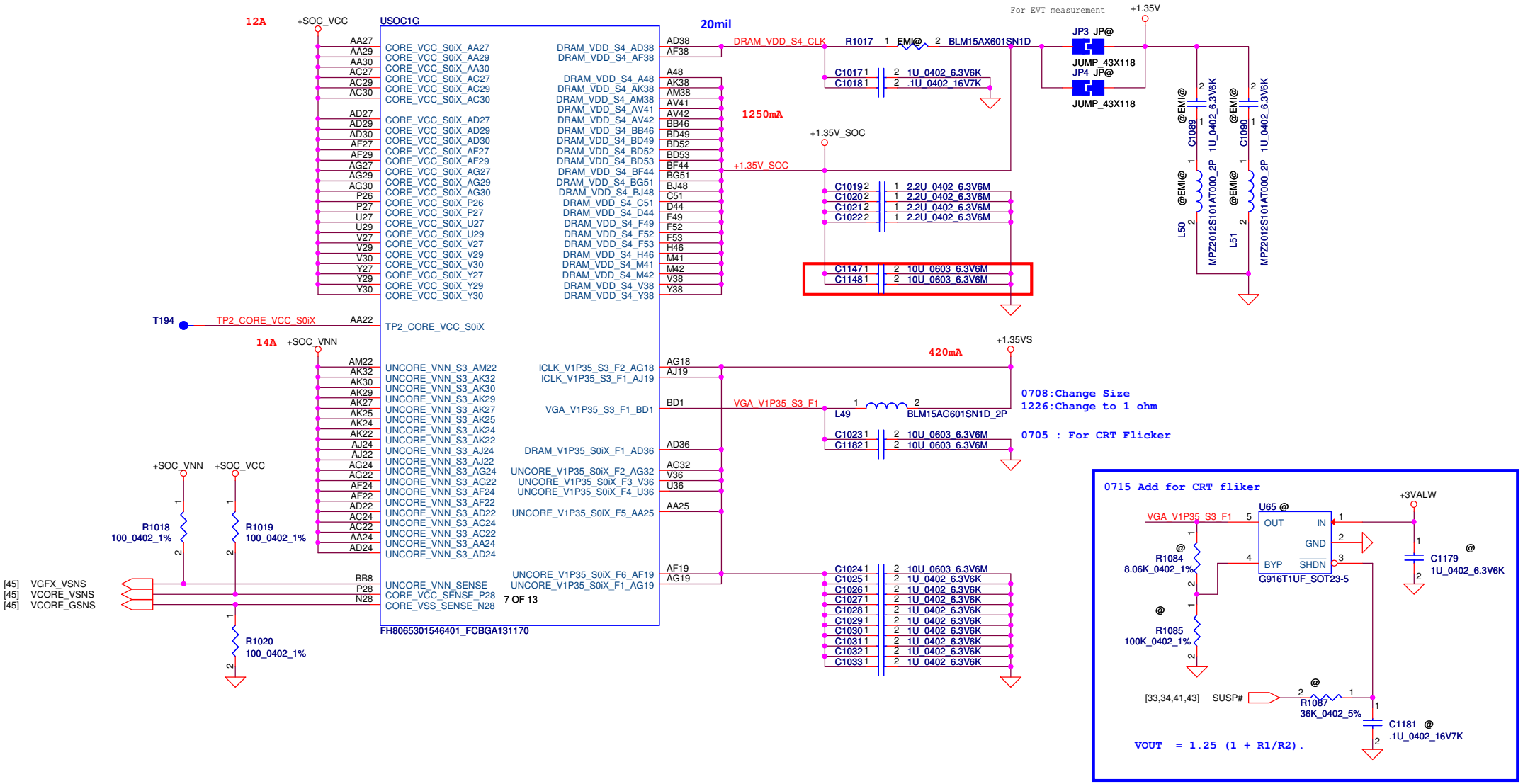

Security Classification	Compal Secret Data		
Issued Date	2013/04/12	Deciphered Date	2014/04/12

THIS SHEET OF ENGINEERING DRAWING IS THE PROPRIETARY PROPERTY OF COMPAL ELECTRONICS, INC. AND CONTAINS CONFIDENTIAL AND TRADE SECRET INFORMATION. THIS SHEET MAY NOT BE TRANSFERED FROM THE CUSTODY OF THE COMPETENT DIVISION OF R&D DEPARTMENT EXCEPT AS AUTHORIZED BY COMPAL ELECTRONICS, INC. NEITHER THIS SHEET NOR THE INFORMATION IT CONTAINS MAY BE USED BY OR DISCLOSED TO ANY THIRD PARTY WITHOUT PRIOR WRITTEN CONSENT OF COMPAL ELECTRONICS, INC.

Compal Electronics, Inc.

Title: **VLV-M SOC Power**

Size: Custom | Document Number: **Intel BayTrail-M Platform** | Rev: 0.2

Date: Tuesday, February 18, 2014 | Sheet 10 of 47

WWW.AliSaler.Com

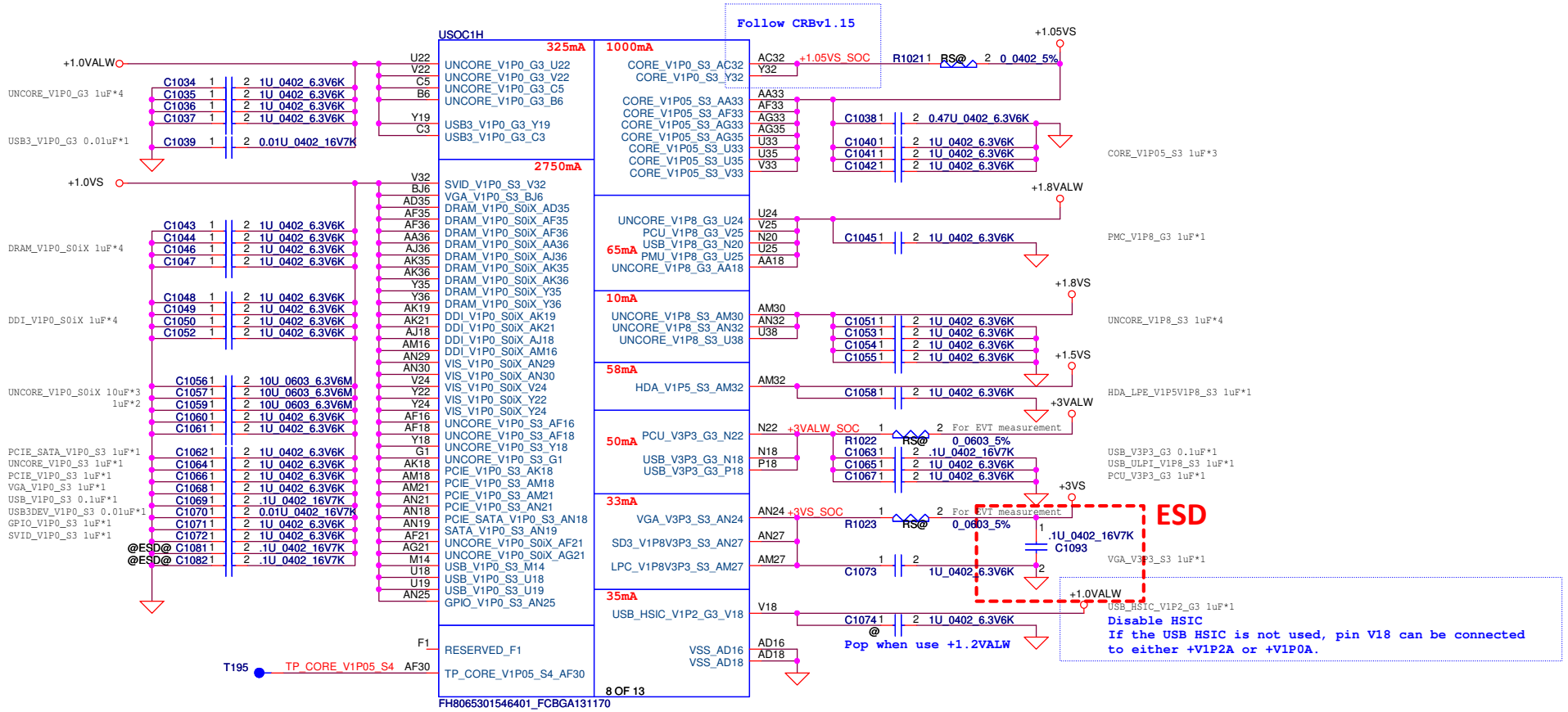

Security Classification	Compal Secret Data		
Issued Date	2013/04/12	Deciphered Date	2014/04/12

THIS SHEET OF ENGINEERING DRAWING IS THE PROPRIETARY PROPERTY OF COMPAL ELECTRONICS, INC. AND CONTAINS CONFIDENTIAL AND TRADE SECRET INFORMATION. THIS SHEET MAY NOT BE TRANSFERED FROM THE CUSTODY OF THE COMPETENT DIVISION OF R&D DEPARTMENT EXCEPT AS AUTHORIZED BY COMPAL ELECTRONICS, INC. NEITHER THIS SHEET NOR THE INFORMATION IT CONTAINS MAY BE USED BY OR DISCLOSED TO ANY THIRD PARTY WITHOUT PRIOR WRITTEN CONSENT OF COMPAL ELECTRONICS, INC.

Compal Electronics, Inc.

Title: **VLV-M SOC Power**

Size: Custom | Document Number: **Intel BayTrail-M Platform** | Rev: 0.2

Date: Thursday, February 20, 2014 | Sheet 11 of 47

WWW.AliSaler.Com

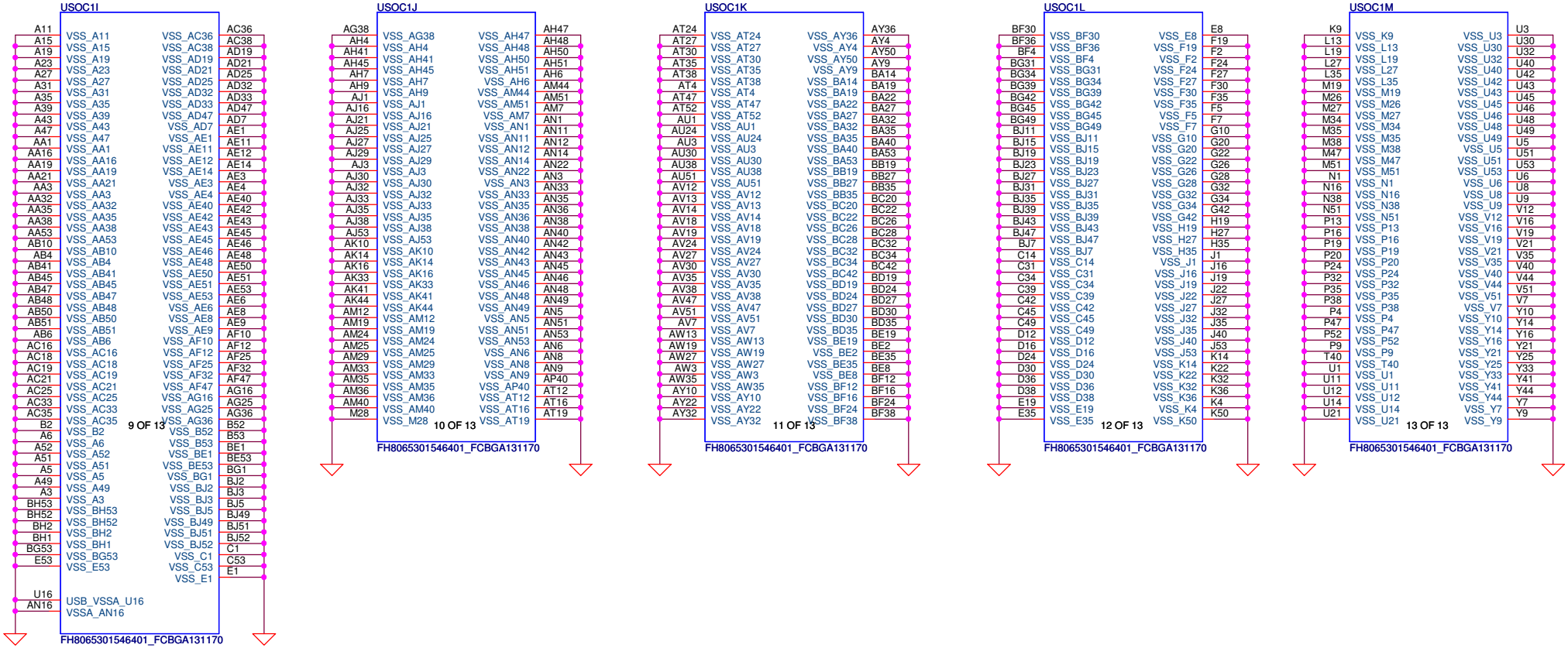

Security Classification	Compal Secret Data			Compal Electronics, Inc.
Issued Date	2013/04/12	Deciphered Date	2014/04/12	Title: VLV-M SOC GND

THIS SHEET OF ENGINEERING DRAWING IS THE PROPRIETARY PROPERTY OF COMPAL ELECTRONICS, INC. AND CONTAINS CONFIDENTIAL AND TRADE SECRET INFORMATION. THIS SHEET MAY NOT BE TRANSFERED FROM THE CUSTODY OF THE COMPETENT DIVISION OF R&D DEPARTMENT EXCEPT AS AUTHORIZED BY COMPAL ELECTRONICS, INC. NEITHER THIS SHEET NOR THE INFORMATION IT CONTAINS MAY BE USED BY OR DISCLOSED TO ANY THIRD PARTY WITHOUT PRIOR WRITTEN CONSENT OF COMPAL ELECTRONICS, INC.

Size	Document Number	Rev
Custom	Intel BayTrail-M Platform	0.2

Date: Tuesday, February 18, 2014 | Sheet 12 of 47

WWW.AliSaler.Com

Signal voltage level = 0.675 V
PLACE TWO 4.7K RESISTORS CLOSE TO
DIMMS ON DIMM_VREF_CA / DIMM_VREF_DQ
Decoupling caps are needed; one 0.1 µF placed close to VREF pins of each DDR3 SODIMM.

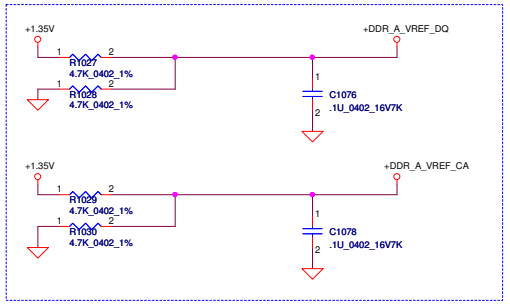

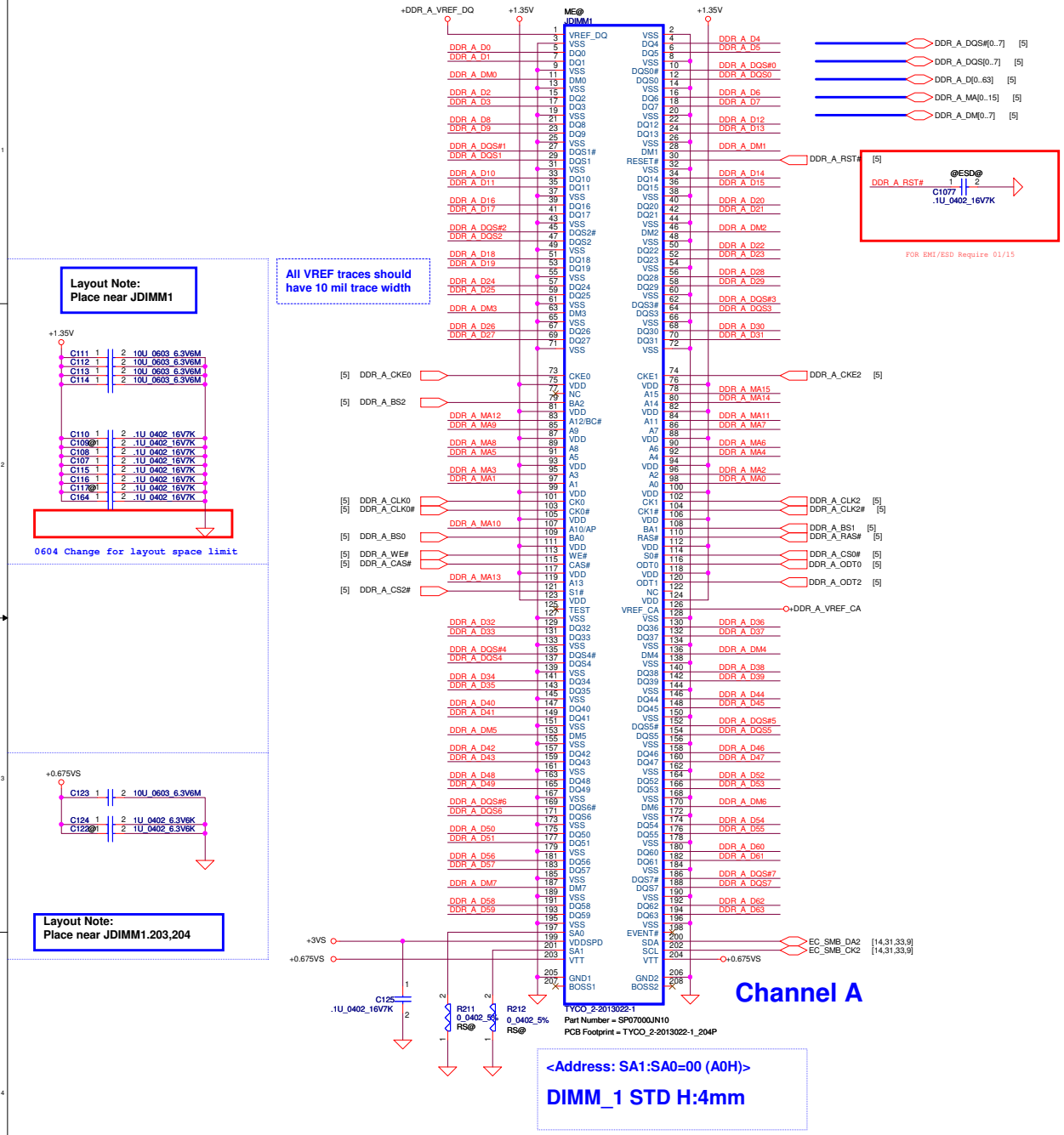

Security Classification	Compal Secret Data		
Issued Date	2013/04/12	Deciphered Date	2014/04/12

THIS SHEET OF ENGINEERING DRAWING IS THE PROPRIETARY PROPERTY OF COMPAL ELECTRONICS, INC. AND CONTAINS CONFIDENTIAL AND TRADE SECRET INFORMATION. THIS SHEET MAY NOT BE TRANSFERED FROM THE CUSTODY OF THE COMPETENT DIVISION OF R&D DEPARTMENT EXCEPT AS AUTHORIZED BY COMPAL ELECTRONICS, INC. NEITHER THIS SHEET NOR THE INFORMATION IT CONTAINS MAY BE USED BY OR DISCLOSED TO ANY THIRD PARTY WITHOUT PRIOR WRITTEN CONSENT OF COMPAL ELECTRONICS, INC.

Compal Electronics, Inc.

Title: DDR3L DIMMA

Size: Custom | Document Number: Intel BayTrail-M Platform | Rev: 0.2

Date: Tuesday, February 18, 2014 | Sheet 13 of 47

WWW.AliSaler.Com

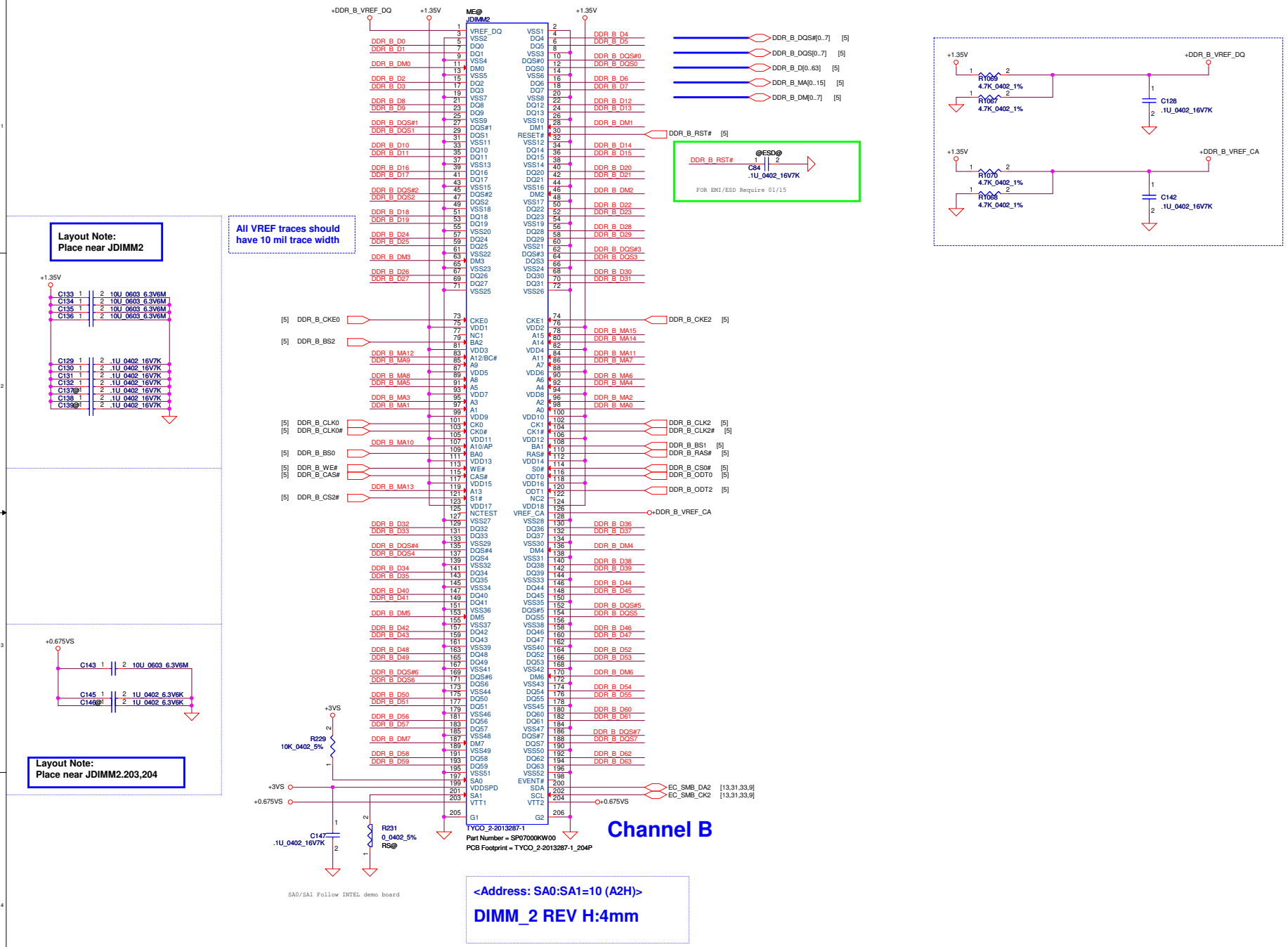

Security Classification	Compal Secret Data		
Issued Date	2013/04/12	Deciphered Date	2014/04/12

THIS SHEET OF ENGINEERING DRAWING IS THE PROPRIETARY PROPERTY OF COMPAL ELECTRONICS, INC. AND CONTAINS CONFIDENTIAL AND TRADE SECRET INFORMATION. THIS SHEET MAY NOT BE TRANSFERED FROM THE CUSTODY OF THE COMPETENT DIVISION OF R&D DEPARTMENT EXCEPT AS AUTHORIZED BY COMPAL ELECTRONICS, INC. NEITHER THIS SHEET NOR THE INFORMATION IT CONTAINS MAY BE USED BY OR DISCLOSED TO ANY THIRD PARTY WITHOUT PRIOR WRITTEN CONSENT OF COMPAL ELECTRONICS, INC.

Compal Electronics, Inc.

Title: DDR3L DIMMB

Size: Custom | Document Number: Intel BayTrail-M Platform | Rev: 0.2

Date: Tuesday, February 18, 2014 | Sheet 14 of 47

WWW.AliSaler.Com

Security Classification	Compal Secret Data		
Issued Date	2011/07/15	Deciphered Date	2012/07/15

THIS SHEET OF ENGINEERING DRAWING IS THE PROPRIETARY PROPERTY OF COMPAL ELECTRONICS, INC. AND CONTAINS CONFIDENTIAL AND TRADE SECRET INFORMATION. THIS SHEET MAY NOT BE TRANSFERED FROM THE CUSTODY OF THE COMPETENT DIVISION OF R&D DEPARTMENT EXCEPT AS AUTHORIZED BY COMPAL ELECTRONICS, INC. NEITHER THIS SHEET NOR THE INFORMATION IT CONTAINS MAY BE USED BY OR DISCLOSED TO ANY THIRD PARTY WITHOUT PRIOR WRITTEN CONSENT OF COMPAL ELECTRONICS, INC.

Compal Electronics, Inc.

Title: **NV(1/5)-PCIE**

Size	Document Number	Rev
C	LA-A721P	0.2

Date: Tuesday, February 18, 2014 | Sheet 15 of 47

WWW.AliSaler.Com

Security Classification	Compal Secret Data		
Issued Date	2011/07/15	Deciphered Date	2012/07/15

THIS SHEET OF ENGINEERING DRAWING IS THE PROPRIETARY PROPERTY OF COMPAL ELECTRONICS, INC. AND CONTAINS CONFIDENTIAL AND TRADE SECRET INFORMATION. THIS SHEET MAY NOT BE TRANSFERED FROM THE CUSTODY OF THE COMPETENT DIVISION OF R&D DEPARTMENT EXCEPT AS AUTHORIZED BY COMPAL ELECTRONICS, INC. NEITHER THIS SHEET NOR THE INFORMATION IT CONTAINS MAY BE USED BY OR DISCLOSED TO ANY THIRD PARTY WITHOUT PRIOR WRITTEN CONSENT OF COMPAL ELECTRONICS, INC.

Compal Electronics, Inc.

Title: **NV(2/5)-IFP ABCDEF DAC XTAL**

Size: Custom | Document Number: **LA-A721P** | Rev: 0.2

Date: Tuesday, February 18, 2014 | Sheet 16 of 47

WWW.AliSaler.Com

Security Classification	Compal Secret Data		
Issued Date	2011/07/15	Deciphered Date	2012/07/15

THIS SHEET OF ENGINEERING DRAWING IS THE PROPRIETARY PROPERTY OF COMPAL ELECTRONICS, INC. AND CONTAINS CONFIDENTIAL AND TRADE SECRET INFORMATION. THIS SHEET MAY NOT BE TRANSFERED FROM THE CUSTODY OF THE COMPETENT DIVISION OF R&D DEPARTMENT EXCEPT AS AUTHORIZED BY COMPAL ELECTRONICS, INC. NEITHER THIS SHEET NOR THE INFORMATION IT CONTAINS MAY BE USED BY OR DISCLOSED TO ANY THIRD PARTY WITHOUT PRIOR WRITTEN CONSENT OF COMPAL ELECTRONICS, INC.

Compal Electronics, Inc.

Title: **NV(3/5)-POWER**

Size	Document Number	Rev
C	LA-A721P	0.2

Date: Tuesday, February 18, 2014 | Sheet 17 of 47

WWW.AliSaler.Com

Security Classification	Compal Secret Data		
Issued Date	2011/07/15	Deciphered Date	2012/07/15

THIS SHEET OF ENGINEERING DRAWING IS THE PROPRIETARY PROPERTY OF COMPAL ELECTRONICS, INC. AND CONTAINS CONFIDENTIAL AND TRADE SECRET INFORMATION. THIS SHEET MAY NOT BE TRANSFERED FROM THE CUSTODY OF THE COMPETENT DIVISION OF R&D DEPARTMENT EXCEPT AS AUTHORIZED BY COMPAL ELECTRONICS, INC. NEITHER THIS SHEET NOR THE INFORMATION IT CONTAINS MAY BE USED BY OR DISCLOSED TO ANY THIRD PARTY WITHOUT PRIOR WRITTEN CONSENT OF COMPAL ELECTRONICS, INC.

Compal Electronics, Inc.

Title: *NV(4/5)-GPIO/Strap*

Size	Document Number	Rev
Custom	*LA-A721P*	0.2

Date: Tuesday, February 18, 2014 | Sheet 18 of 47

WWW.AliSaler.Com

Security Classification	Compal Secret Data			Compal Electronics, Inc.
Issued Date	2011/07/15	Deciphered Date	2012/07/15	Title: NV(2/5)-MEMORY FBA

THIS SHEET OF ENGINEERING DRAWING IS THE PROPRIETARY PROPERTY OF COMPAL ELECTRONICS, INC. AND CONTAINS CONFIDENTIAL AND TRADE SECRET INFORMATION. THIS SHEET MAY NOT BE TRANSFERED FROM THE CUSTODY OF THE COMPETENT DIVISION OF R&D DEPARTMENT EXCEPT AS AUTHORIZED BY COMPAL ELECTRONICS, INC. NEITHER THIS SHEET NOR THE INFORMATION IT CONTAINS MAY BE USED BY OR DISCLOSED TO ANY THIRD PARTY WITHOUT PRIOR WRITTEN CONSENT OF COMPAL ELECTRONICS, INC.

Size	Document Number	Rev
Custom	LA-A721P	0.2

Date: Tuesday, February 18, 2014 Sheet 19 of 47

WWW.AliSaler.Com

Security Classification	Compal Secret Data		
Issued Date	2011/07/15	Deciphered Date	2012/07/15

THIS SHEET OF ENGINEERING DRAWING IS THE PROPRIETARY PROPERTY OF COMPAL ELECTRONICS, INC. AND CONTAINS CONFIDENTIAL AND TRADE SECRET INFORMATION. THIS SHEET MAY NOT BE TRANSFERRED FROM THE CUSTODY OF THE COMPETENT DIVISION OF R&D DEPARTMENT EXCEPT AS AUTHORIZED BY COMPAL ELECTRONICS, INC. NEITHER THIS SHEET NOR THE INFORMATION IT CONTAINS MAY BE USED BY OR DISCLOSED TO ANY THIRD PARTY WITHOUT PRIOR WRITTEN CONSENT OF COMPAL ELECTRONICS, INC.

Compal Electronics, Inc.

Title: **DGPU_DC/DC Interface**

Size | Document Number | Rev 0.2

Date: Tuesday, February 18, 2014 | Sheet 20 of 47

WWW.AliSaler.Com

Security Classification	Compal Secret Data		
Issued Date	2011/07/15	Deciphered Date	2012/07/15

THIS SHEET OF ENGINEERING DRAWING IS THE PROPRIETARY PROPERTY OF COMPAL ELECTRONICS, INC. AND CONTAINS CONFIDENTIAL AND TRADE SECRET INFORMATION. THIS SHEET MAY NOT BE TRANSFERED FROM THE CUSTODY OF THE COMPETENT DIVISION OF R&D DEPARTMENT EXCEPT AS AUTHORIZED BY COMPAL ELECTRONICS, INC. NEITHER THIS SHEET NOR THE INFORMATION IT CONTAINS MAY BE USED BY OR DISCLOSED TO ANY THIRD PARTY WITHOUT PRIOR WRITTEN CONSENT OF COMPAL ELECTRONICS, INC.

Compal Electronics, Inc.

Title: **VRAM_DDR3_A Lower**

Size	Document Number	Rev
Custom	LA-A721P	0.2

Date: Tuesday, February 18, 2014 | Sheet 21 of 47

WWW.AliSaler.Com

Security Classification	Compal Secret Data			Compal Electronics, Inc.
Issued Date	2011/07/15	Deciphered Date	2012/07/15	Title: VRAM_DDR3_A Upper

THIS SHEET OF ENGINEERING DRAWING IS THE PROPRIETARY PROPERTY OF COMPAL ELECTRONICS, INC. AND CONTAINS CONFIDENTIAL AND TRADE SECRET INFORMATION. THIS SHEET MAY NOT BE TRANSFERED FROM THE CUSTODY OF THE COMPETENT DIVISION OF R&D DEPARTMENT EXCEPT AS AUTHORIZED BY COMPAL ELECTRONICS, INC. NEITHER THIS SHEET NOR THE INFORMATION IT CONTAINS MAY BE USED BY OR DISCLOSED TO ANY THIRD PARTY WITHOUT PRIOR WRITTEN CONSENT OF COMPAL ELECTRONICS, INC.

Size	Document Number	Rev
Custom	LA-A721P	0.2

Date: Tuesday, February 18, 2014 Sheet 22 of 47

WWW.AliSaler.Com

LCD POWER CIRCUIT

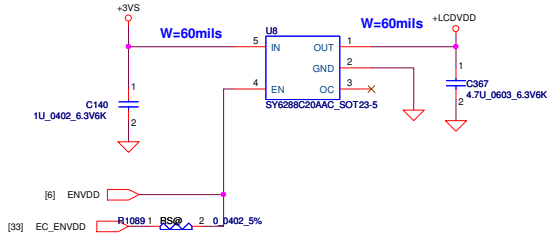

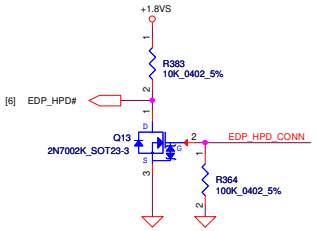

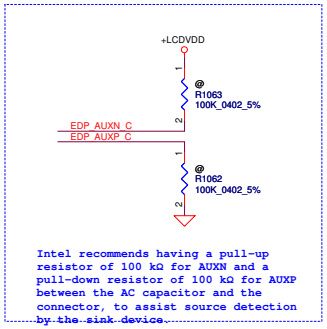

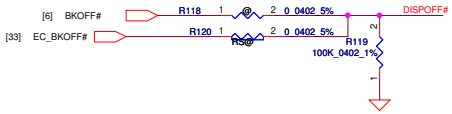

Camera

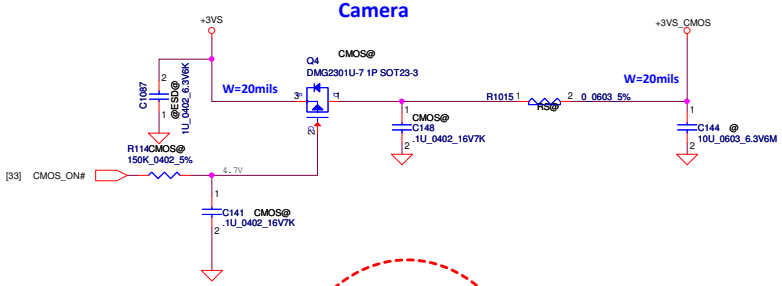

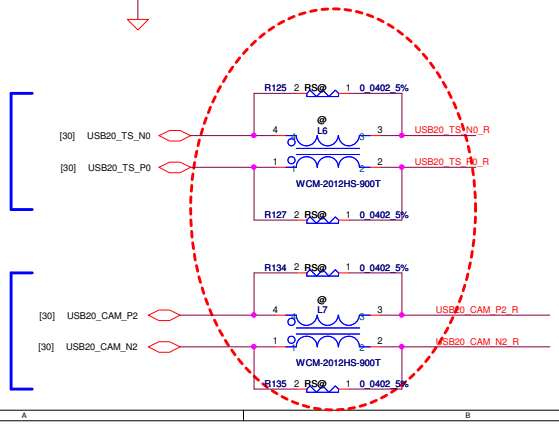

LCD/ LED PANEL Conn.

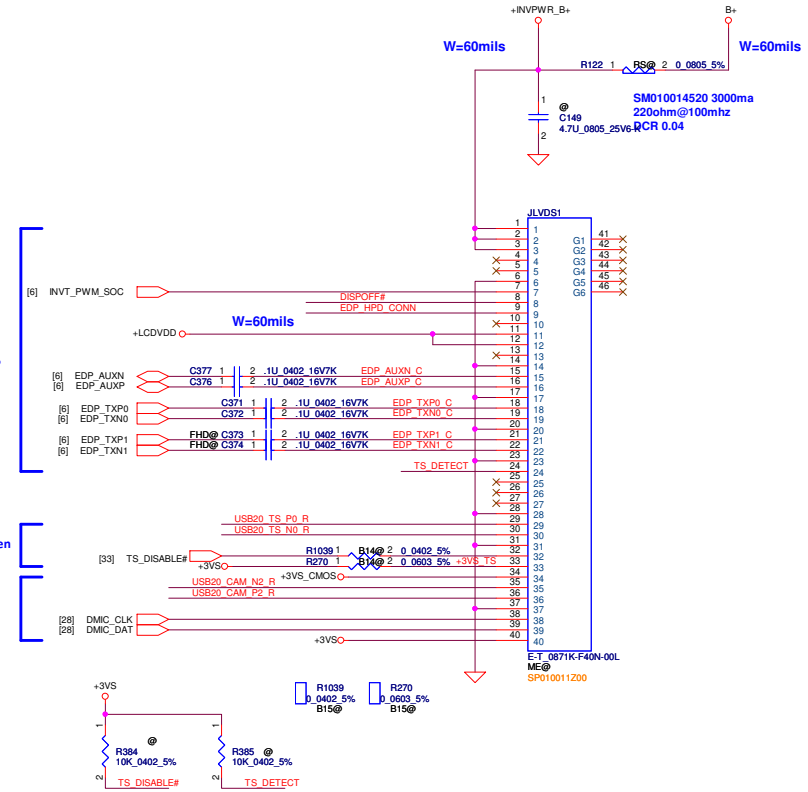

Security Classification	Compal Secret Data		
Issued Date	2013/04/12	Deciphered Date	2014/04/12

THIS SHEET OF ENGINEERING DRAWING IS THE PROPRIETARY PROPERTY OF COMPAL ELECTRONICS, INC. AND CONTAINS CONFIDENTIAL AND TRADE SECRET INFORMATION. THIS SHEET MAY NOT BE TRANSFERED FROM THE CUSTODY OF THE COMPETENT DIVISION OF R&D DEPARTMENT EXCEPT AS AUTHORIZED BY COMPAL ELECTRONICS, INC. NEITHER THIS SHEET NOR THE INFORMATION IT CONTAINS MAY BE USED BY OR DISCLOSED TO ANY THIRD PARTY WITHOUT PRIOR WRITTEN CONSENT OF COMPAL ELECTRONICS, INC.

Compal Electronics, Inc.

Title: eDP CONN.

Size: Custom | Document Number: Intel BayTrail-M Platform | Rev: 0.2

Date: Tuesday, February 18, 2014 | Sheet 23 of 47

WWW.AliSaler.Com

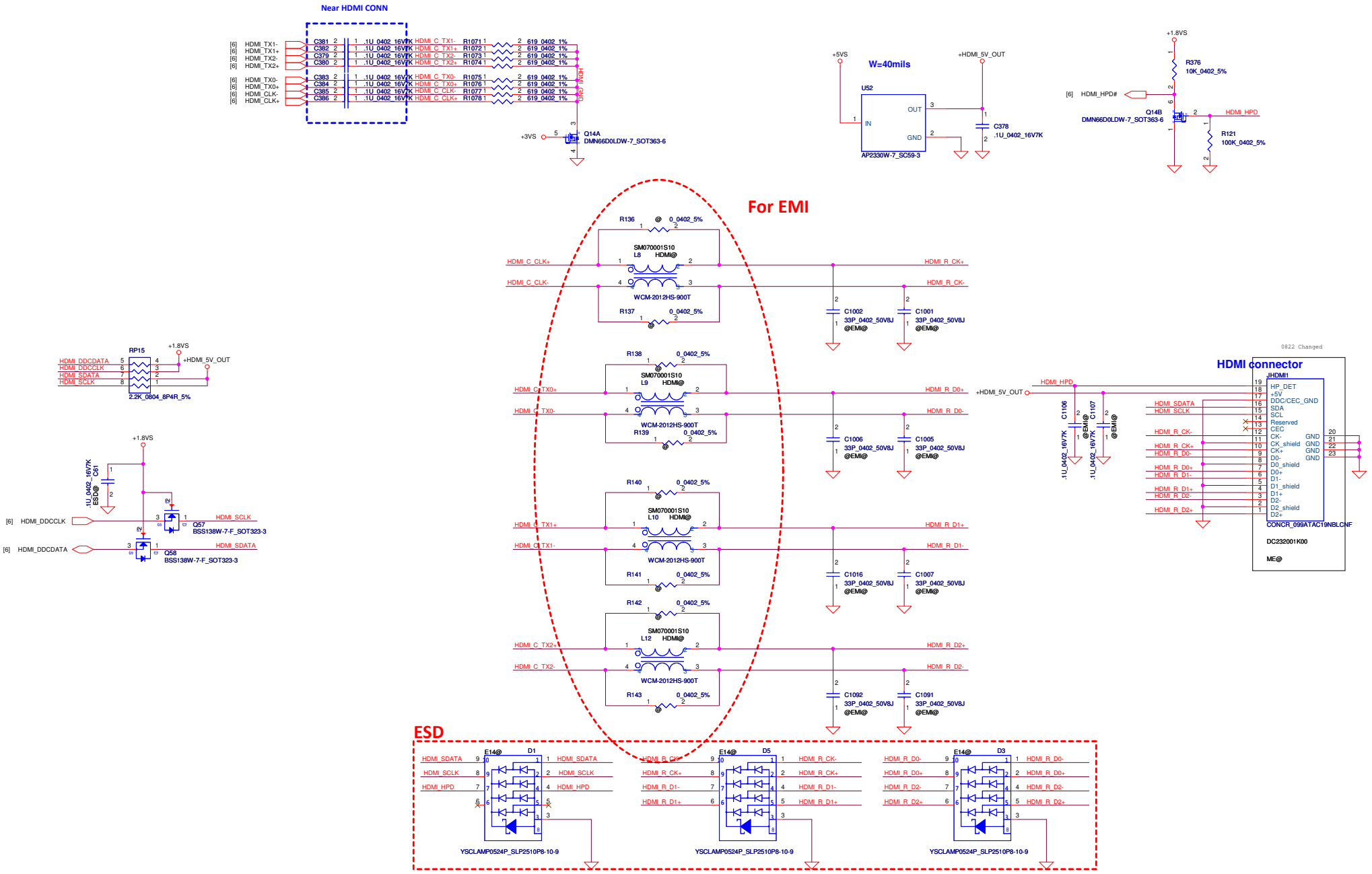

Security Classification	Compal Secret Data		
Issued Date	2013/04/12	Deciphered Date	2014/04/12

THIS SHEET OF ENGINEERING DRAWING IS THE PROPRIETARY PROPERTY OF COMPAL ELECTRONICS, INC. AND CONTAINS CONFIDENTIAL AND TRADE SECRET INFORMATION. THIS SHEET MAY NOT BE TRANSFERED FROM THE CUSTODY OF THE COMPETENT DIVISION OF R&D DEPARTMENT EXCEPT AS AUTHORIZED BY COMPAL ELECTRONICS, INC. NEITHER THIS SHEET NOR THE INFORMATION IT CONTAINS MAY BE USED BY OR DISCLOSED TO ANY THIRD PARTY WITHOUT PRIOR WRITTEN CONSENT OF COMPAL ELECTRONICS, INC.

Compal Electronics, Inc.

Title: HDMI CONN.

Size: Custom | Document Number: Intel BayTrail-M Platform | Rev: 0.2

Date: Tuesday, February 18, 2014 | Sheet 24 of 47

WWW.AliSaler.Com

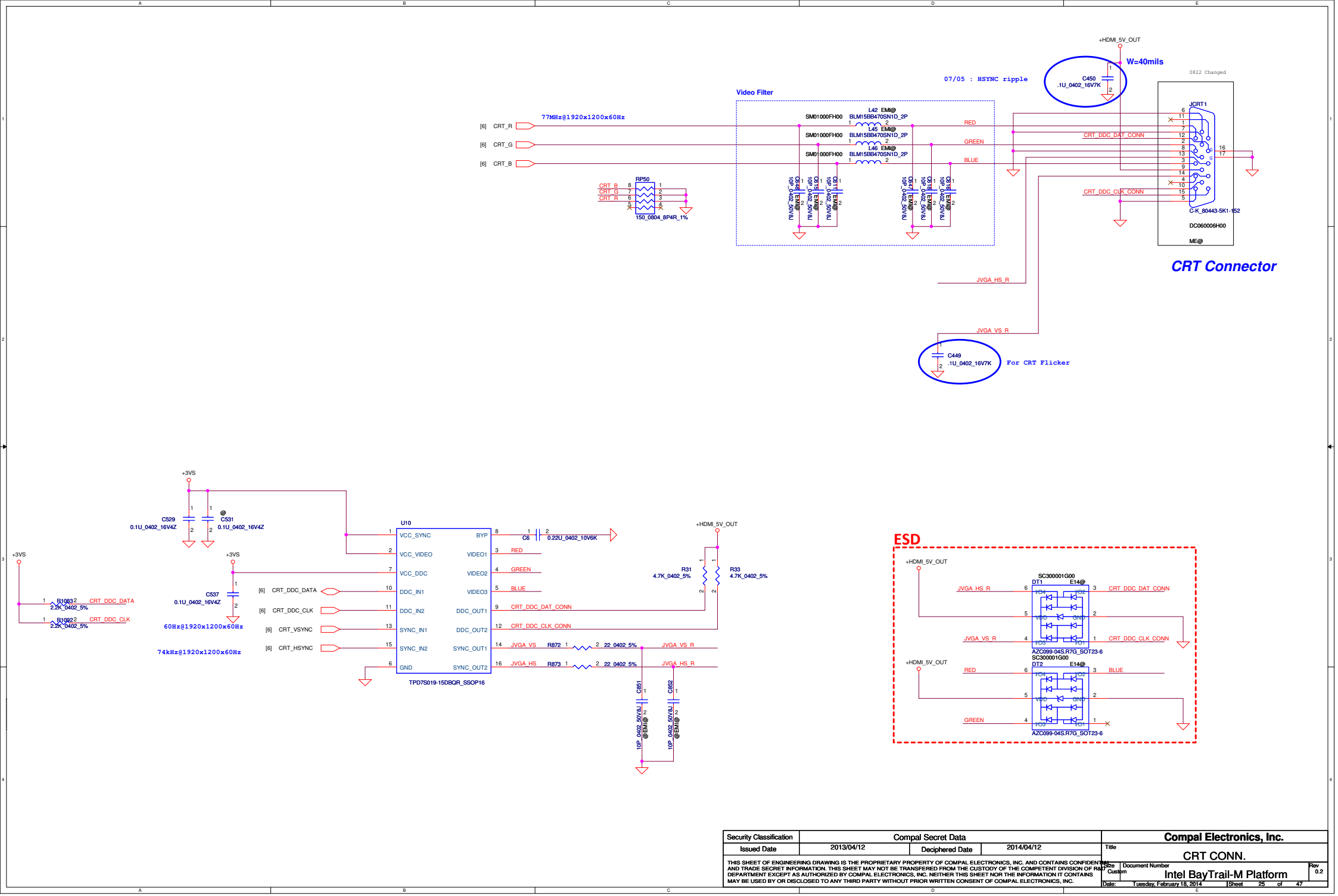

Security Classification	Compal Secret Data		
Issued Date	2013/04/12	Deciphered Date	2014/04/12

THIS SHEET OF ENGINEERING DRAWING IS THE PROPRIETARY PROPERTY OF COMPAL ELECTRONICS, INC. AND CONTAINS CONFIDENTIAL AND TRADE SECRET INFORMATION. THIS SHEET MAY NOT BE TRANSFERED FROM THE CUSTODY OF THE COMPETENT DIVISION OF R&D DEPARTMENT EXCEPT AS AUTHORIZED BY COMPAL ELECTRONICS, INC. NEITHER THIS SHEET NOR THE INFORMATION IT CONTAINS MAY BE USED BY OR DISCLOSED TO ANY THIRD PARTY WITHOUT PRIOR WRITTEN CONSENT OF COMPAL ELECTRONICS, INC.

Compal Electronics, Inc.

Title: CRT CONN.

Size: Custom | Document Number: Intel BayTrail-M Platform | Rev: 0.2

Date: Tuesday, February 18, 2014 | Sheet 25 of 47

WWW.AliSaler.Com

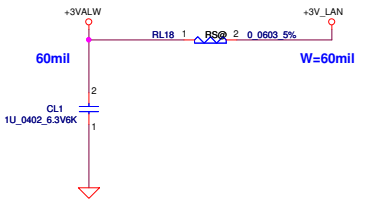

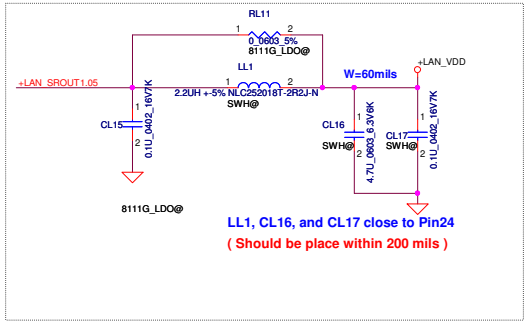

		1.0 V source	LL1	CL16, CL17	CL9, CL10	RL11	CL15
SA00005V700	RTL8111G	LDO	X	X	X	O	O
	~~RTL8111G~~	~~External~~	~~X~~	~~X~~	~~X~~	~~X~~	~~O~~
	RTL8111GS/ RTL8111GUS/ RTL8106EUS	SWR	O	O	O	X	X
SA000065Y00	RTL8106E	LDO	X	X	X	X	X

Please refer to the table above when using different 1.0V supply source.
For RTL8111GS, RTL8111GUS, RTL8106E and RTL8106EUS, External 1.0V Supply Is Not Permitted.

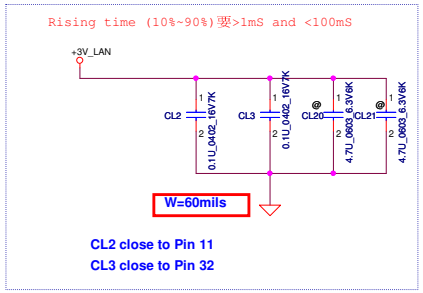

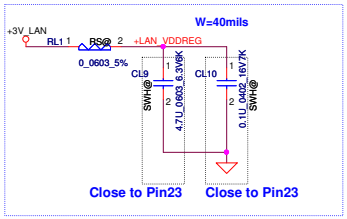

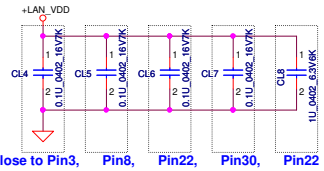

RJ-45 CONN.

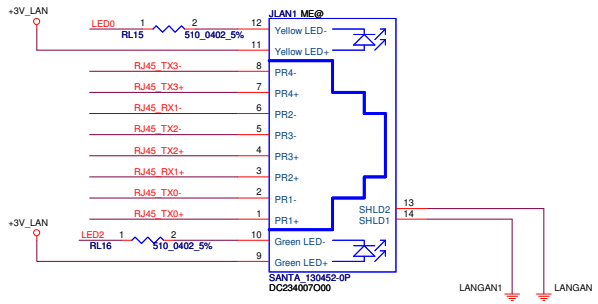

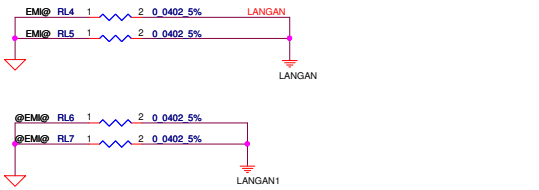

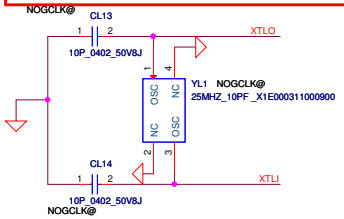

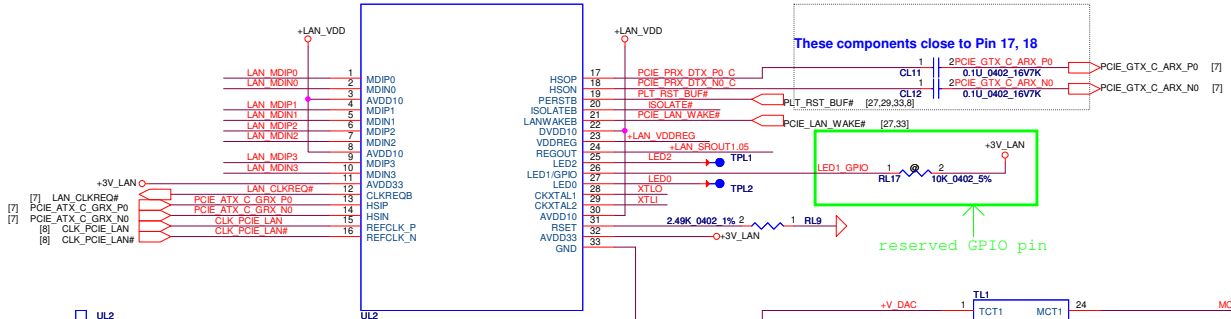

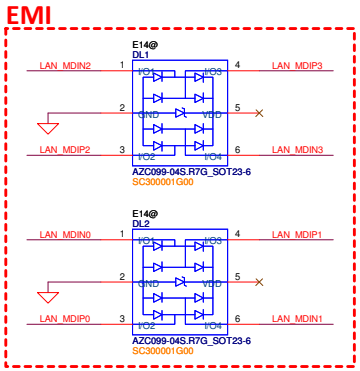

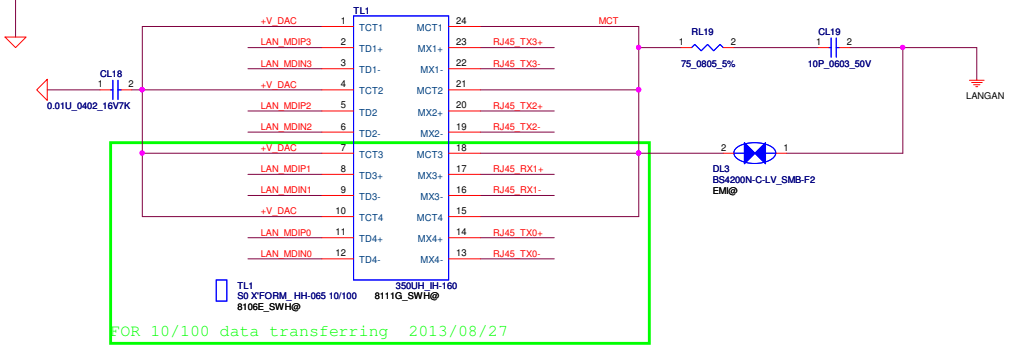

Security Classification	Compal Secret Data		
Issued Date	2013/04/12	Deciphered Date	2014/04/12

THIS SHEET OF ENGINEERING DRAWING IS THE PROPRIETARY PROPERTY OF COMPAL ELECTRONICS, INC. AND CONTAINS CONFIDENTIAL AND TRADE SECRET INFORMATION. THIS SHEET MAY NOT BE TRANSFERED FROM THE CUSTODY OF THE COMPETENT DIVISION OF R&D DEPARTMENT EXCEPT AS AUTHORIZED BY COMPAL ELECTRONICS, INC. NEITHER THIS SHEET NOR THE INFORMATION IT CONTAINS MAY BE USED BY OR DISCLOSED TO ANY THIRD PARTY WITHOUT PRIOR WRITTEN CONSENT OF COMPAL ELECTRONICS, INC.

Compal Electronics, Inc.

Title: LAN RTL8111G/8106E

Size: Custom | Document Number: Intel BayTrail-M Platform | Rev: 0.2

Date: Tuesday, February 18, 2014 | Sheet 26 of 47

WWW.AliSaler.Com

NGFF for WLAN / BT(Key E)

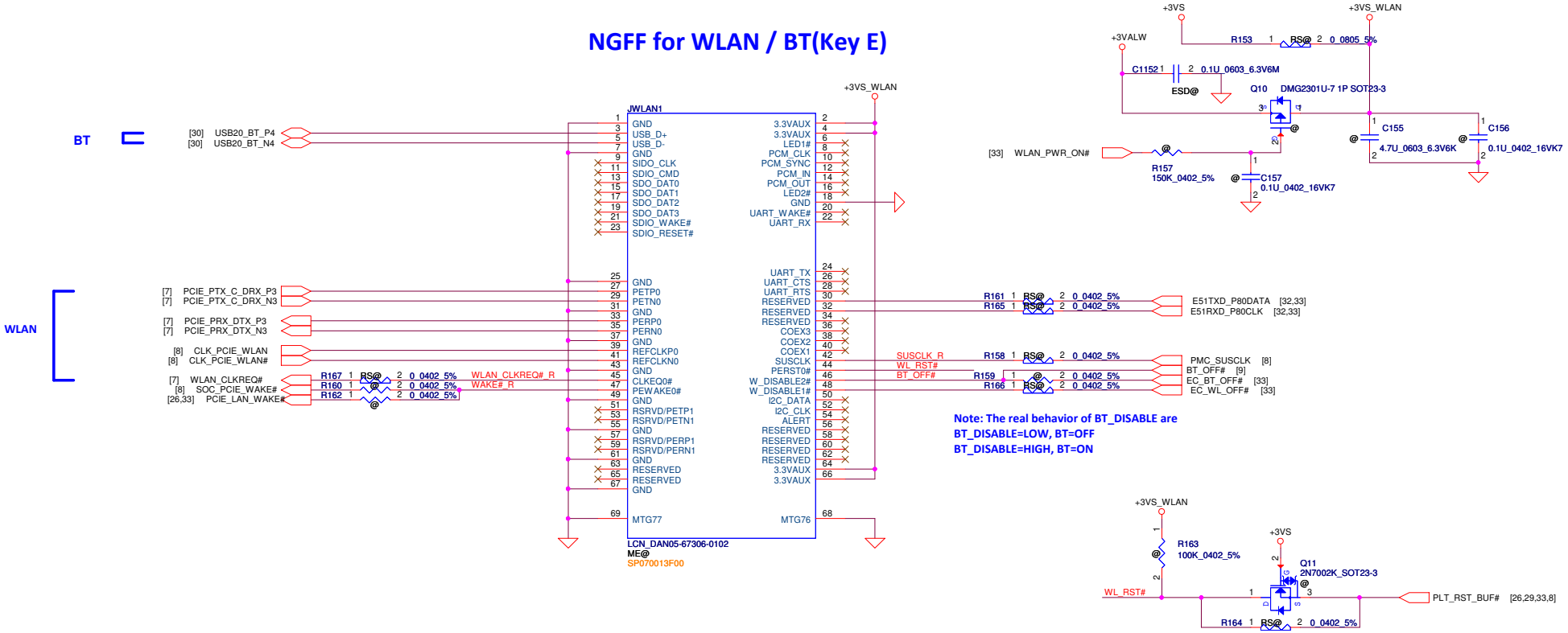

Security Classification	Compal Secret Data			Compal Electronics, Inc.
Issued Date	2013/04/12	Deciphered Date	2014/04/12	Title: Mini PCIE(WLAN)
				Size: Custom; Document Number: Intel BayTrail-M Platform; Rev: 0.2
				Date: Tuesday, February 18, 2014; Sheet 27 of 47

THIS SHEET OF ENGINEERING DRAWING IS THE PROPRIETARY PROPERTY OF COMPAL ELECTRONICS, INC. AND CONTAINS CONFIDENTIAL AND TRADE SECRET INFORMATION. THIS SHEET MAY NOT BE TRANSFERRED FROM THE CUSTODY OF THE COMPETENT DIVISION OF R&D DEPARTMENT EXCEPT AS AUTHORIZED BY COMPAL ELECTRONICS, INC. NEITHER THIS SHEET NOR THE INFORMATION IT CONTAINS MAY BE USED BY OR DISCLOSED TO ANY THIRD PARTY WITHOUT PRIOR WRITTEN CONSENT OF COMPAL ELECTRONICS, INC.

WWW.AliSaler.Com

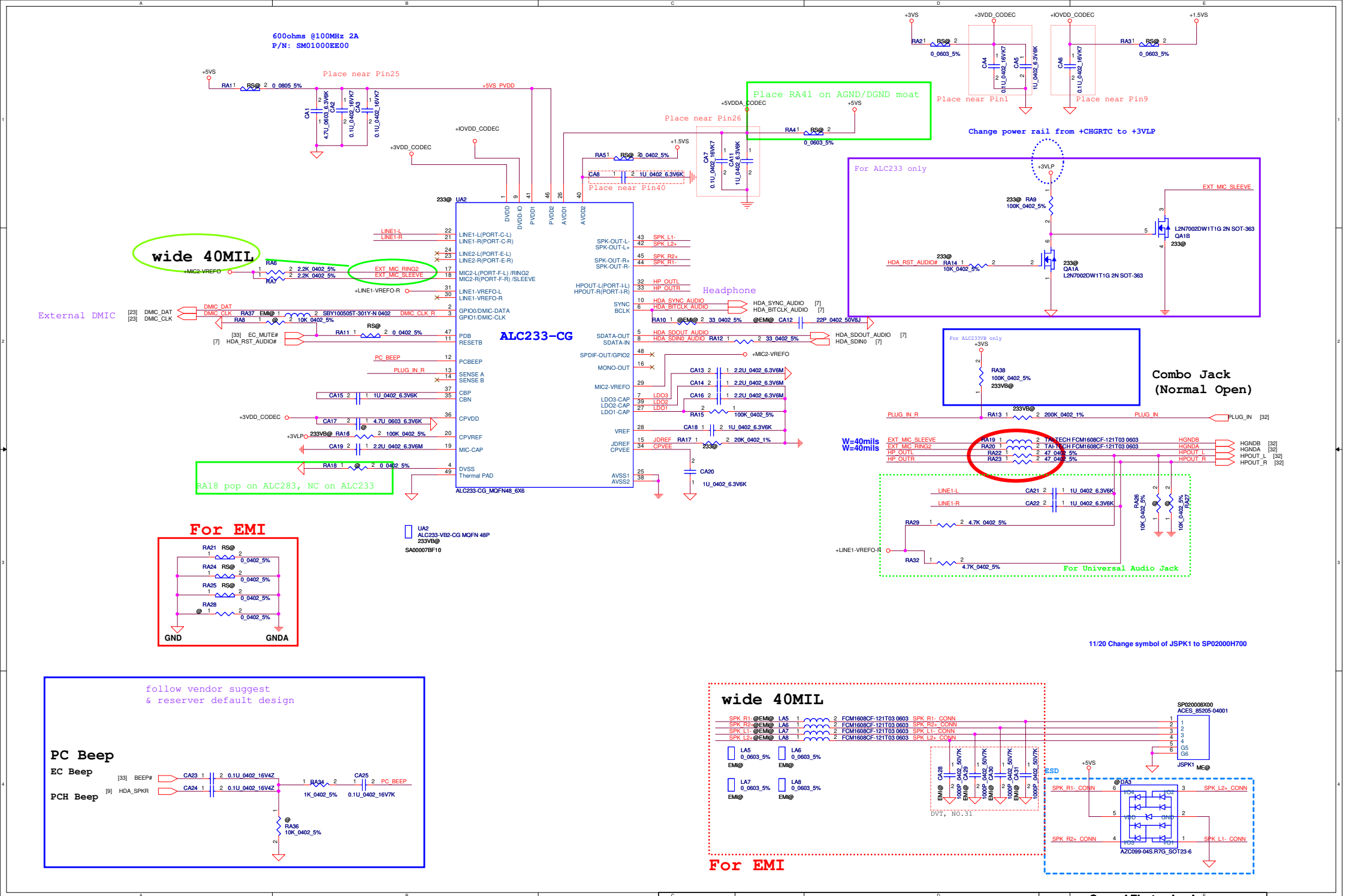

Security Classification	Compal Secret Data		
Issued Date	2013/04/12	Deciphered Date	2014/04/12

THIS SHEET OF ENGINEERING DRAWING IS THE PROPRIETARY PROPERTY OF COMPAL ELECTRONICS, INC. AND CONTAINS CONFIDENTIAL AND TRADE SECRET INFORMATION. THIS SHEET MAY NOT BE TRANSFERED FROM THE CUSTODY OF THE COMPETENT DIVISION OF R&D DEPARTMENT EXCEPT AS AUTHORIZED BY COMPAL ELECTRONICS, INC. NEITHER THIS SHEET NOR THE INFORMATION IT CONTAINS MAY BE USED BY OR DISCLOSED TO ANY THIRD PARTY WITHOUT PRIOR WRITTEN CONSENT OF COMPAL ELECTRONICS, INC.

Compal Electronics, Inc.

Title: HD Audio Codec_ALC3225

Size: Custom | Document Number: Intel BayTrail-M Platform | Rev: 0.2

Date: Tuesday, February 18, 2014 | Sheet 28 of 47

WWW.AliSaler.Com

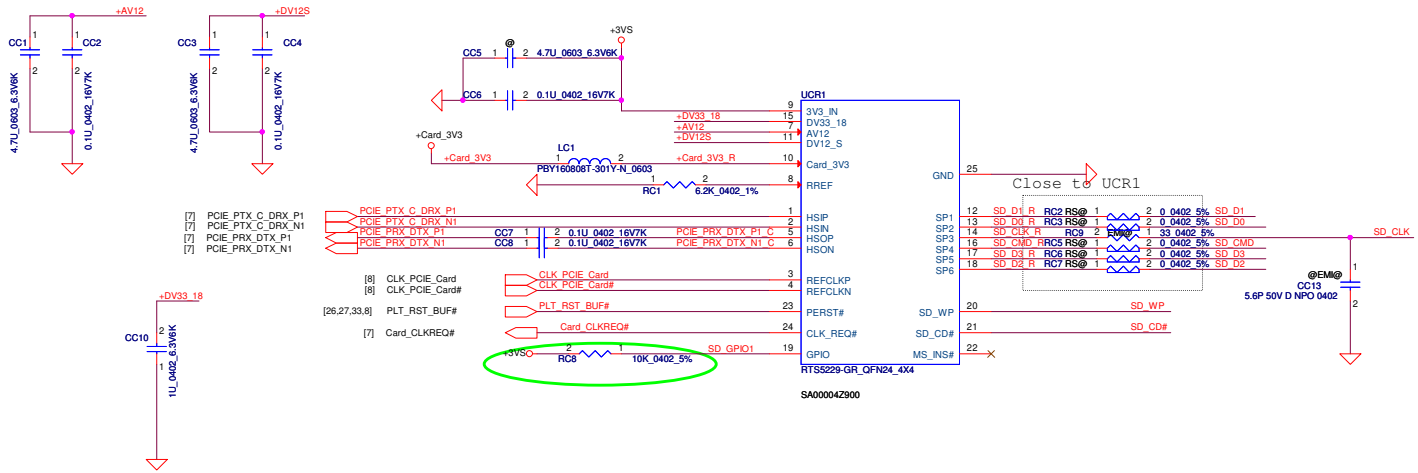

SD/SDXC

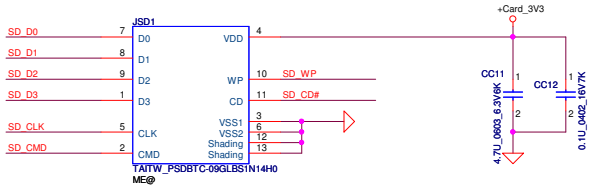

Security Classification	Compal Secret Data		
Issued Date	2012/10/11	Deciphered Date	2014/10/11

THIS SHEET OF ENGINEERING DRAWING IS THE PROPRIETARY PROPERTY OF COMPAL ELECTRONICS, INC. AND CONTAINS CONFIDENTIAL AND TRADE SECRET INFORMATION. THIS SHEET MAY NOT BE TRANSFERED FROM THE CUSTODY OF THE COMPETENT DIVISION OF R&D DEPARTMENT EXCEPT AS AUTHORIZED BY COMPAL ELECTRONICS, INC. NEITHER THIS SHEET NOR THE INFORMATION IT CONTAINS MAY BE USED BY OR DISCLOSED TO ANY THIRD PARTY WITHOUT PRIOR WRITTEN CONSENT OF COMPAL ELECTRONICS, INC.

Compal Electronics, Inc.

Title: P29-CardRead/RTS5229

Size: Custom | Document Number | Rev: 0.2

Date: Tuesday, February 18, 2014 | Sheet 29 of 47

WWW.AliSaler.Com

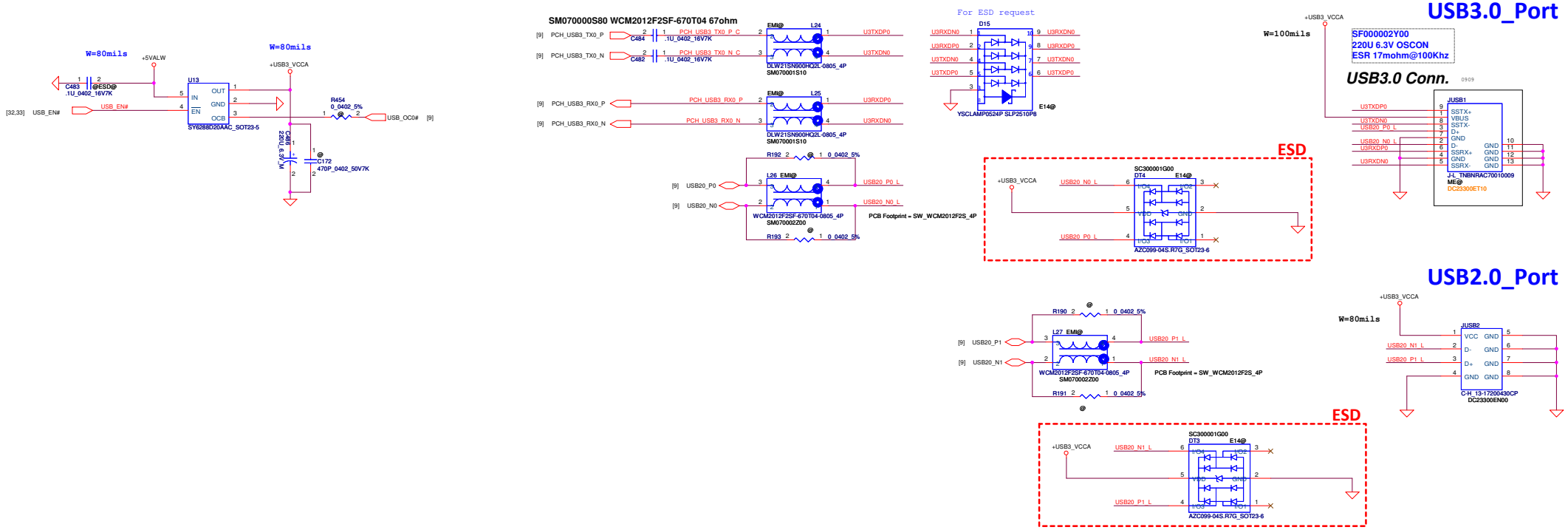

USB2.0 HUB

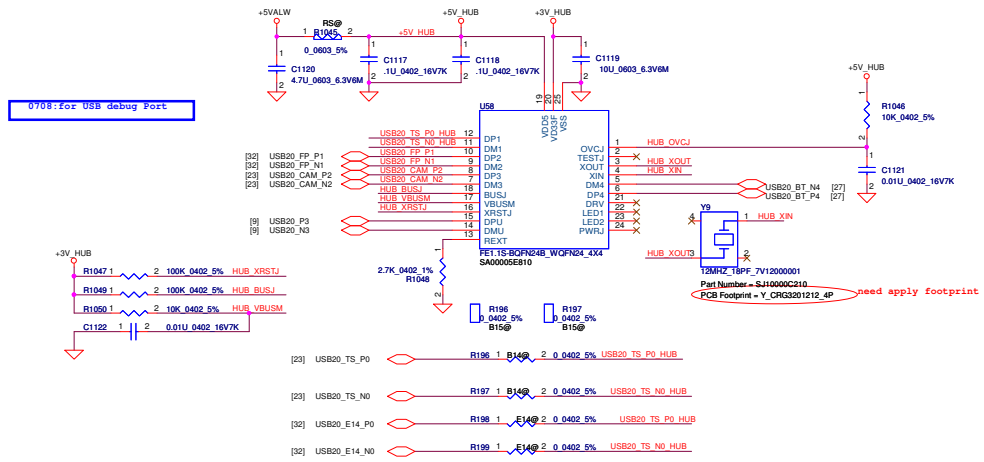

Security Classification	Compal Secret Data		
Issued Date	2013/04/12	Deciphered Date	2014/04/12

THIS SHEET OF ENGINEERING DRAWING IS THE PROPRIETARY PROPERTY OF COMPAL ELECTRONICS, INC. AND CONTAINS CONFIDENTIAL AND TRADE SECRET INFORMATION. THIS SHEET MAY NOT BE TRANSFERED FROM THE CUSTODY OF THE COMPETENT DIVISION OF R&D DEPARTMENT EXCEPT AS AUTHORIZED BY COMPAL ELECTRONICS, INC. NEITHER THIS SHEET NOR THE INFORMATION IT CONTAINS MAY BE USED BY OR DISCLOSED TO ANY THIRD PARTY WITHOUT PRIOR WRITTEN CONSENT OF COMPAL ELECTRONICS, INC.

Compal Electronics, Inc.

Title: USB Conn & Hub FE1.1S

Size: Custom | Document Number: Intel BayTrail-M Platform | Rev: 0.2

Date: Tuesday, February 18, 2014 | Sheet 30 of 47

WWW.AliSaler.Com

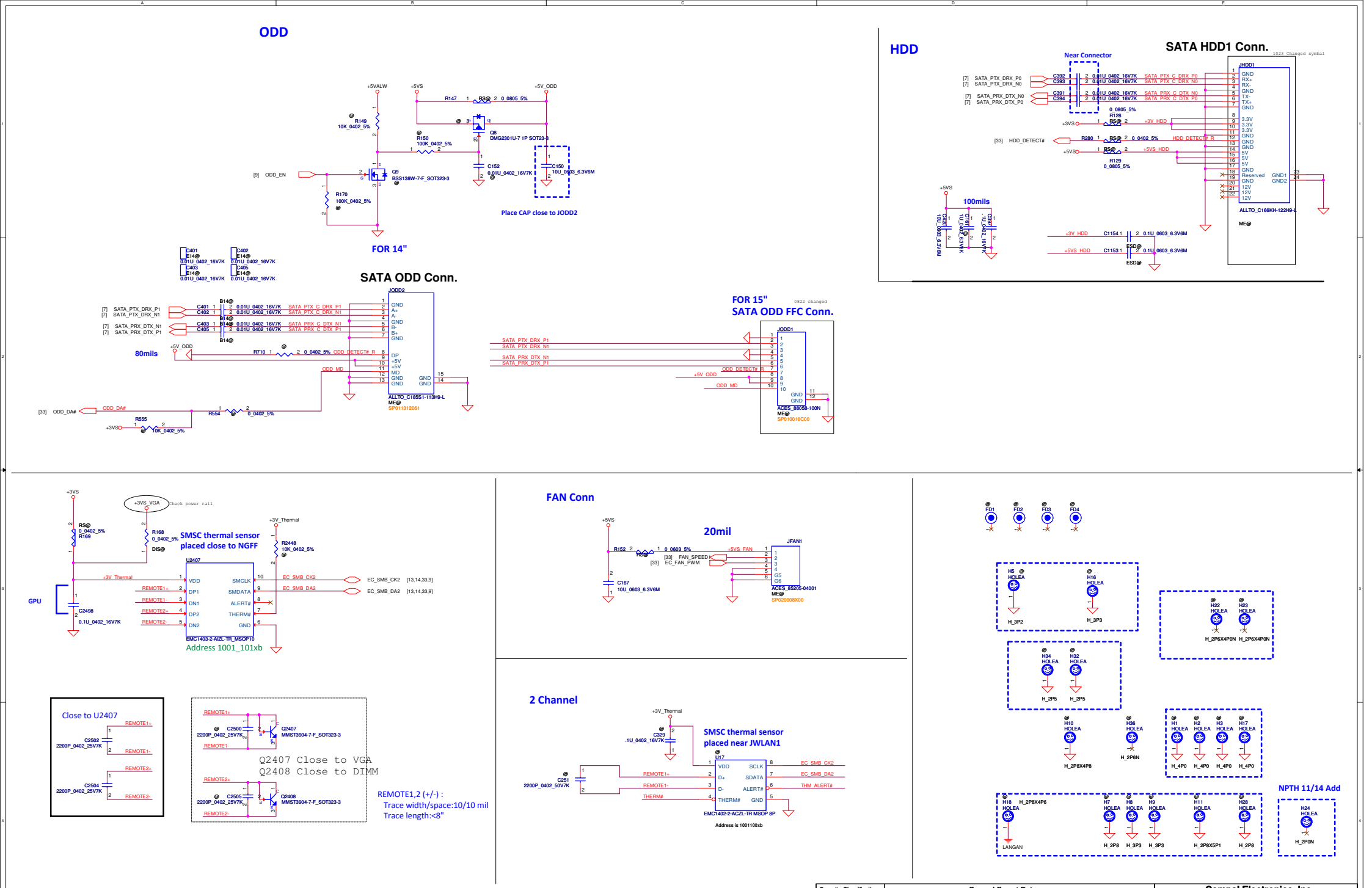

Security Classification	Compal Secret Data		
Issued Date	2013/04/12	Deciphered Date	2014/04/12

THIS SHEET OF ENGINEERING DRAWING IS THE PROPRIETARY PROPERTY OF COMPAL ELECTRONICS, INC. AND CONTAINS CONFIDENTIAL AND TRADE SECRET INFORMATION. THIS SHEET MAY NOT BE TRANSFERED FROM THE CUSTODY OF THE COMPETENT DIVISION OF R&D DEPARTMENT EXCEPT AS AUTHORIZED BY COMPAL ELECTRONICS, INC. NEITHER THIS SHEET NOR THE INFORMATION IT CONTAINS MAY BE USED BY OR DISCLOSED TO ANY THIRD PARTY WITHOUT PRIOR WRITTEN CONSENT OF COMPAL ELECTRONICS, INC.

Compal Electronics, Inc.

Title: HDD/ODD/FAN/Screw Hole

Size: Custom | Document Number: Intel BayTrail-M Platform | Rev: 0.2

Date: Tuesday, February 18, 2014 | Sheet 31 of 47

WWW.AliSaler.Com

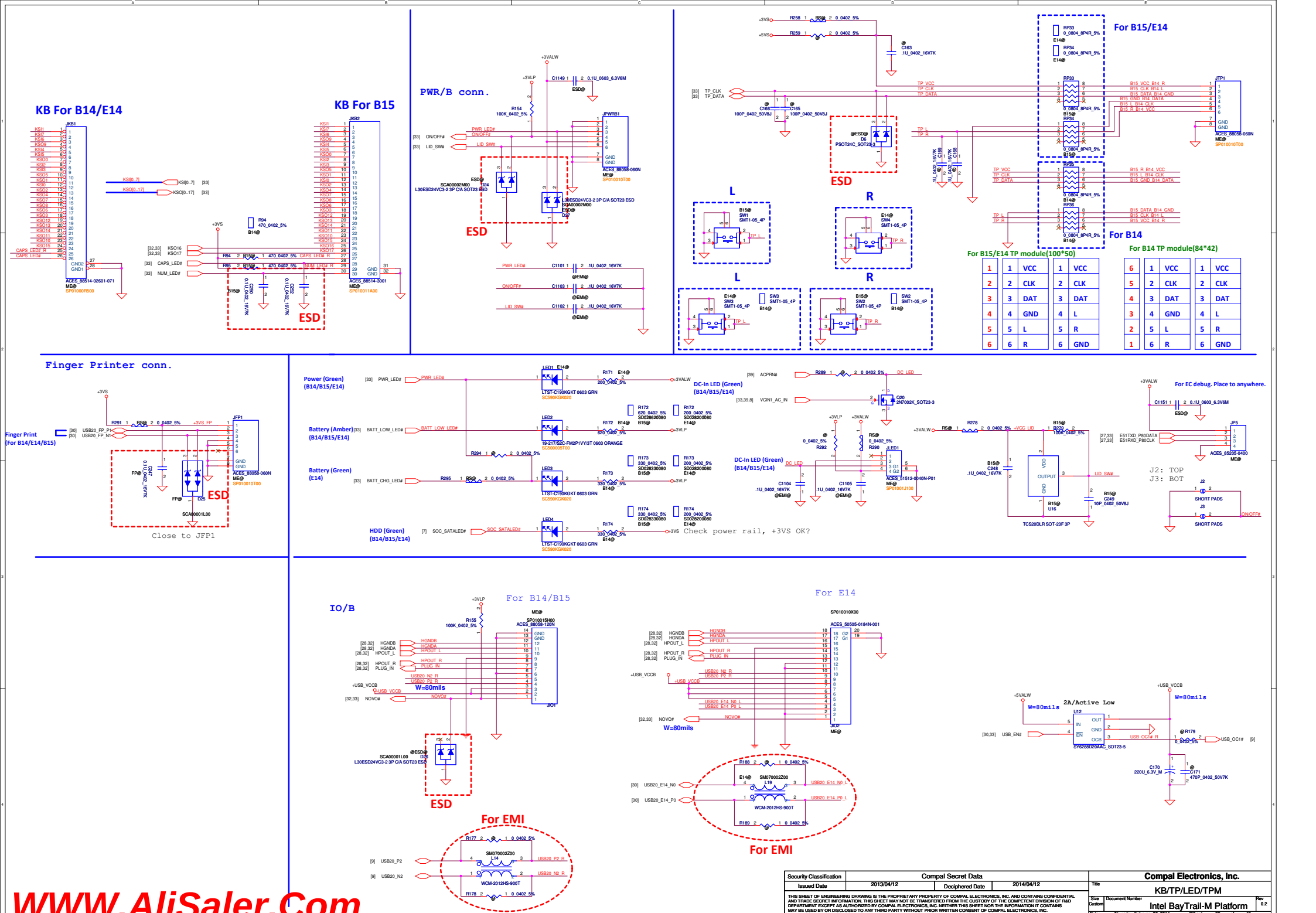

WWW.AliSaler.Com

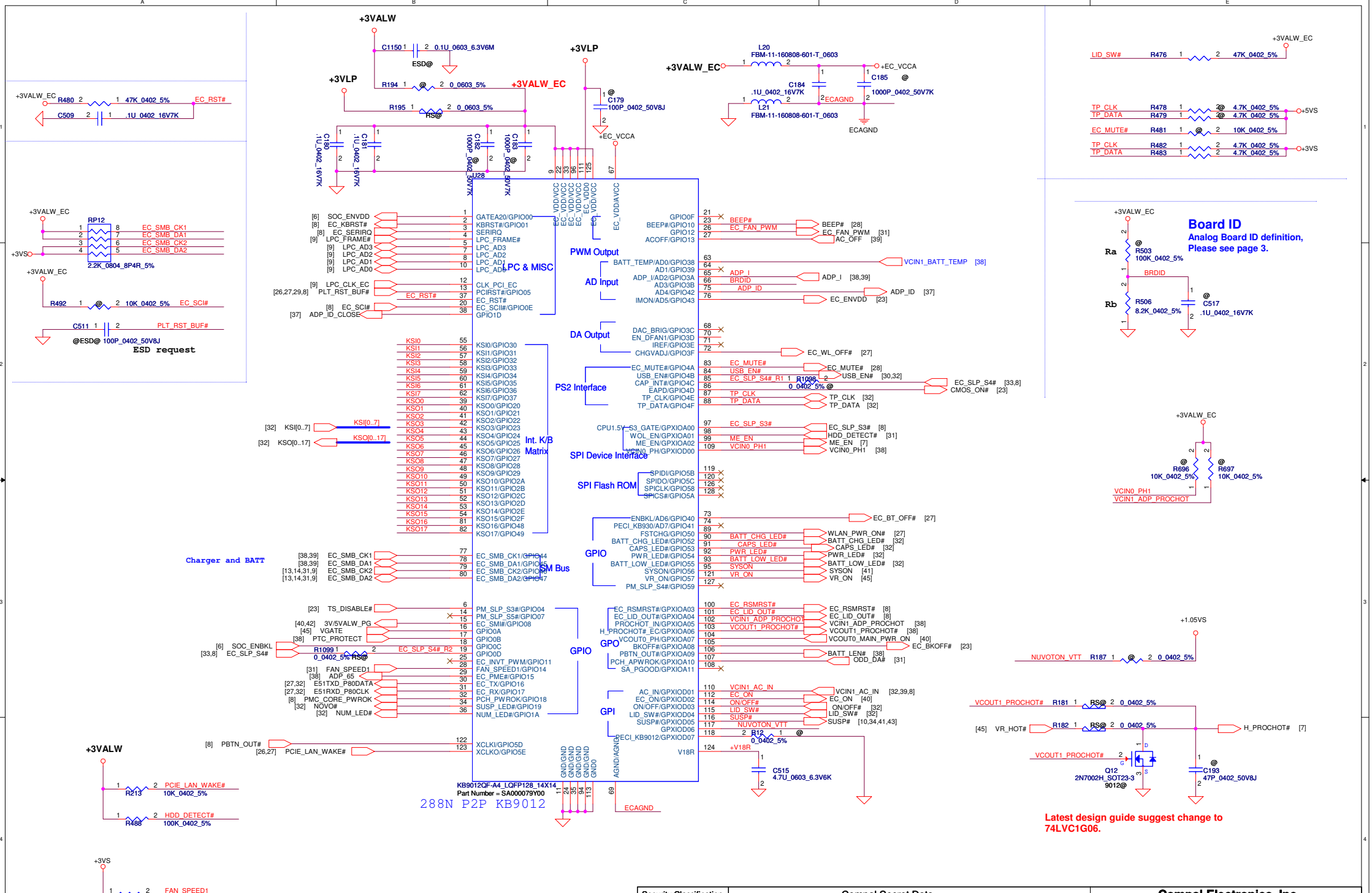

Security Classification	Compal Secret Data		
Issued Date	2013/04/12	Deciphered Date	2014/04/12

THIS SHEET OF ENGINEERING DRAWING IS THE PROPRIETARY PROPERTY OF COMPAL ELECTRONICS, INC. AND CONTAINS CONFIDENTIAL AND TRADE SECRET INFORMATION. THIS SHEET MAY NOT BE TRANSFERED FROM THE CUSTODY OF THE COMPETENT DIVISION OF R&D DEPARTMENT EXCEPT AS AUTHORIZED BY COMPAL ELECTRONICS, INC. NEITHER THIS SHEET NOR THE INFORMATION IT CONTAINS MAY BE USED BY OR DISCLOSED TO ANY THIRD PARTY WITHOUT PRIOR WRITTEN CONSENT OF COMPAL ELECTRONICS, INC.

Compal Electronics, Inc.

Title: EC ENE KB9012

Size: Custom | Document Number: Intel BayTrail-M Platform | Rev: 0.2

Date: Tuesday, February 18, 2014 | Sheet 33 of 47

WWW.AliSaler.Com

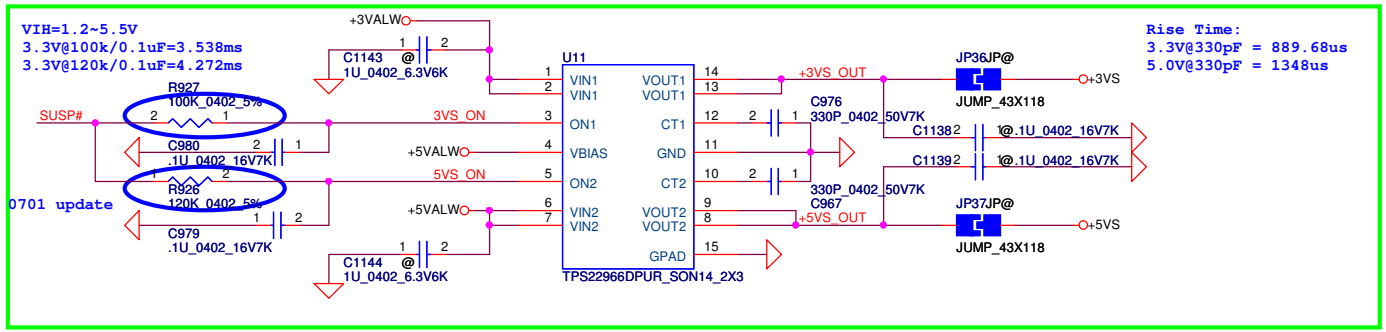

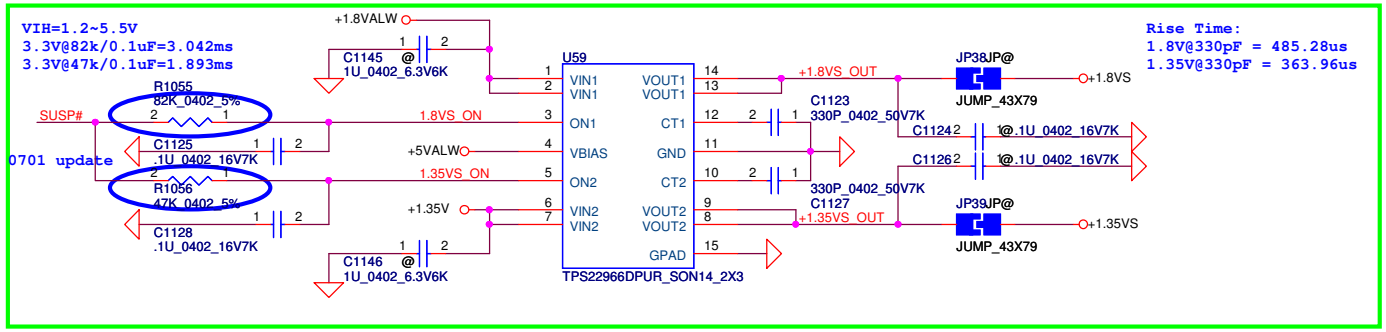

+1.0VALW TO +1.0VS

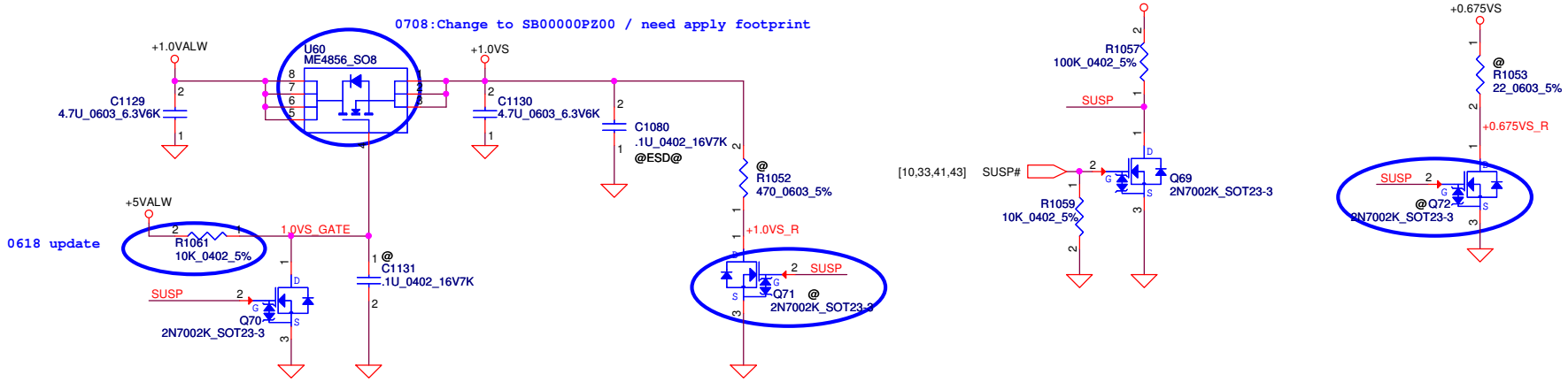

Security Classification	Compal Secret Data		
Issued Date	2013/04/12	Deciphered Date	2014/04/12

THIS SHEET OF ENGINEERING DRAWING IS THE PROPRIETARY PROPERTY OF COMPAL ELECTRONICS, INC. AND CONTAINS CONFIDENTIAL AND TRADE SECRET INFORMATION. THIS SHEET MAY NOT BE TRANSFERED FROM THE CUSTODY OF THE COMPETENT DIVISION OF R&D DEPARTMENT EXCEPT AS AUTHORIZED BY COMPAL ELECTRONICS, INC. NEITHER THIS SHEET NOR THE INFORMATION IT CONTAINS MAY BE USED BY OR DISCLOSED TO ANY THIRD PARTY WITHOUT PRIOR WRITTEN CONSENT OF COMPAL ELECTRONICS, INC.

Compal Electronics, Inc.

Title: DC INTERFACE

Size: Custom | Document Number: Intel BayTrail-M Platform | Rev: 0.2

Date: Tuesday, February 18, 2014 | Sheet 34 of 47

WWW.AliSaler.Com

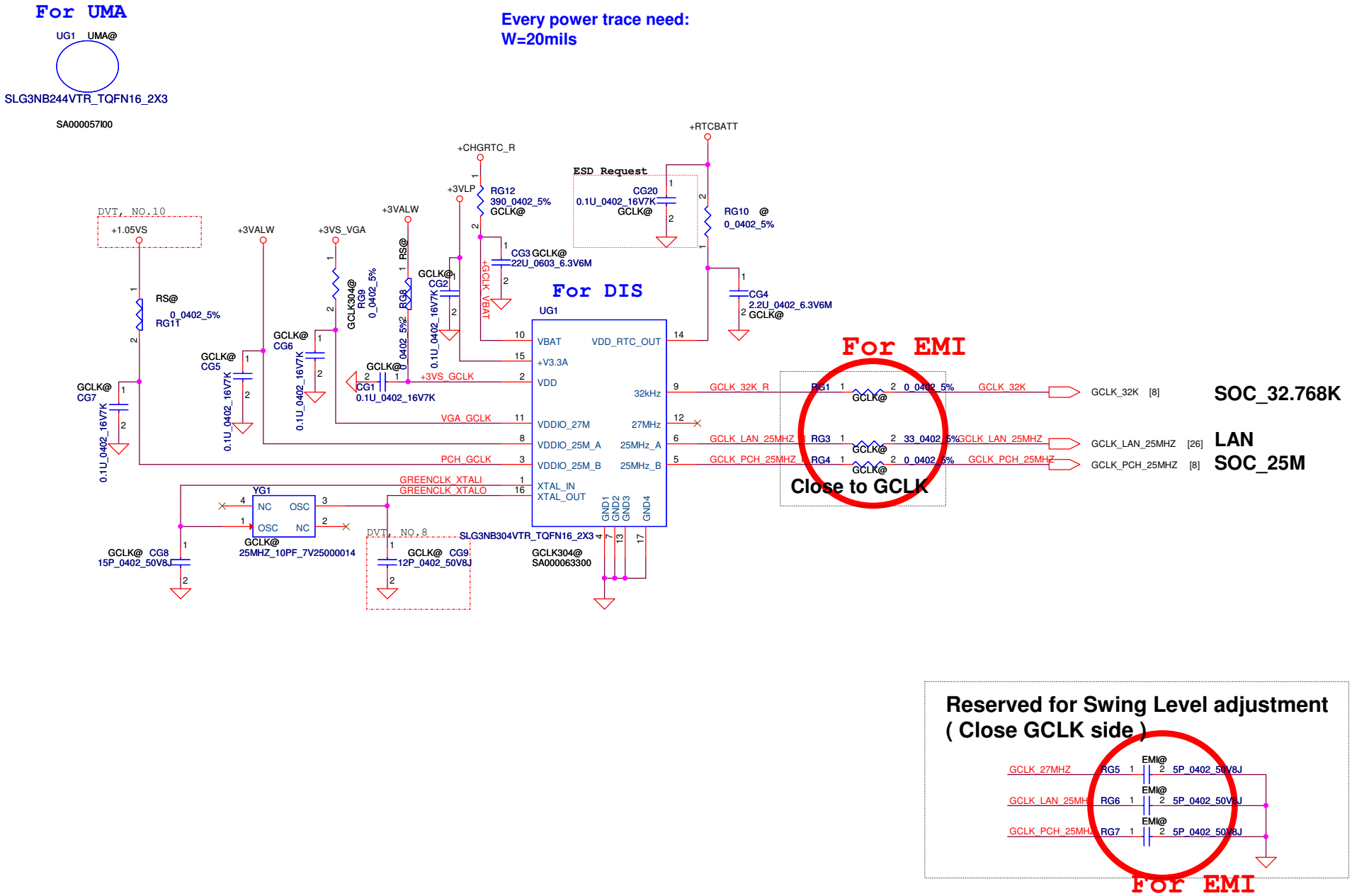

Security Classification	Compal Secret Data		
Issued Date	2012/10/11	Deciphered Date	2014/10/11

THIS SHEET OF ENGINEERING DRAWING IS THE PROPRIETARY PROPERTY OF COMPAL ELECTRONICS, INC. AND CONTAINS CONFIDENTIAL AND TRADE SECRET INFORMATION. THIS SHEET MAY NOT BE TRANSFERED FROM THE CUSTODY OF THE COMPETENT DIVISION OF R&D DEPARTMENT EXCEPT AS AUTHORIZED BY COMPAL ELECTRONICS, INC. NEITHER THIS SHEET NOR THE INFORMATION IT CONTAINS MAY BE USED BY OR DISCLOSED TO ANY THIRD PARTY WITHOUT PRIOR WRITTEN CONSENT OF COMPAL ELECTRONICS, INC.

Title: P35-GCLK

Size: Custom | Document Number | Rev 0.2

Date: Tuesday, February 18, 2014 | Sheet 35 of 47

WWW.AliSaler.Com

Security Classification	Compal Secret Data		
Issued Date	2013/04/12	Deciphered Date	2014/04/12

THIS SHEET OF ENGINEERING DRAWING IS THE PROPRIETARY PROPERTY OF COMPAL ELECTRONICS, INC. AND CONTAINS CONFIDENTIAL AND TRADE SECRET INFORMATION. THIS SHEET MAY NOT BE TRANSFERED FROM THE CUSTODY OF THE COMPETENT DIVISION OF R&D DEPARTMENT EXCEPT AS AUTHORIZED BY COMPAL ELECTRONICS, INC. NEITHER THIS SHEET NOR THE INFORMATION IT CONTAINS MAY BE USED BY OR DISCLOSED TO ANY THIRD PARTY WITHOUT PRIOR WRITTEN CONSENT OF COMPAL ELECTRONICS, INC.

Compal Electronics, Inc.

Title: HW RIR

Size: B | Document Number: Intel BayTrail-M Platform | Rev: 0.2

Date: Tuesday, February 18, 2014 | Sheet 36 of 47

WWW.AliSaler.Com

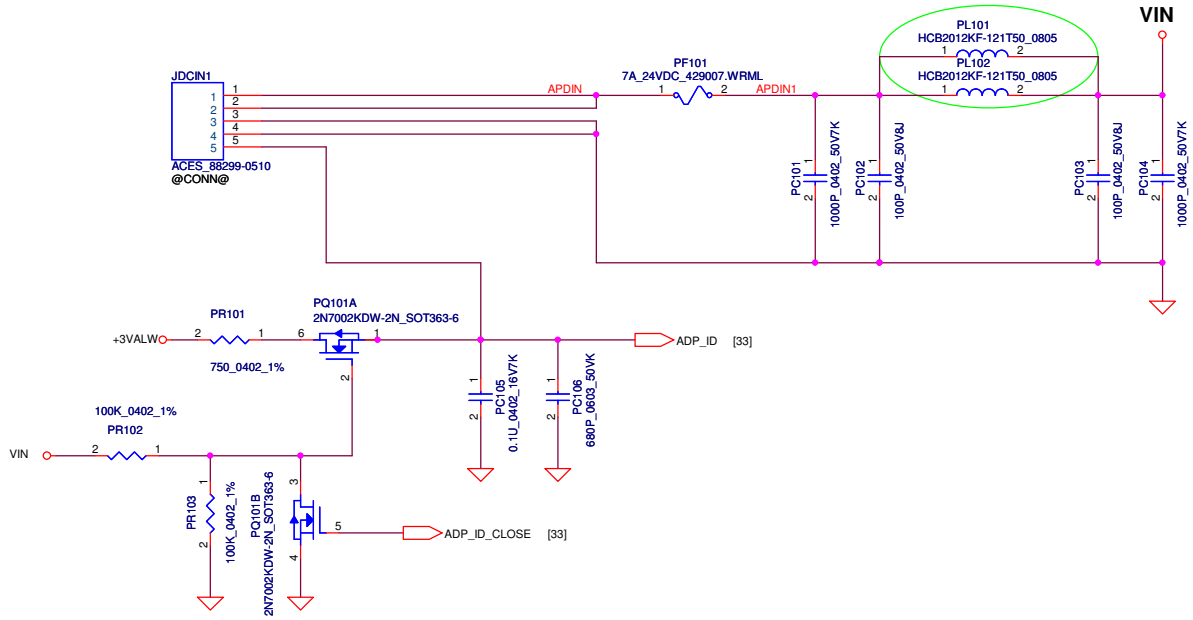

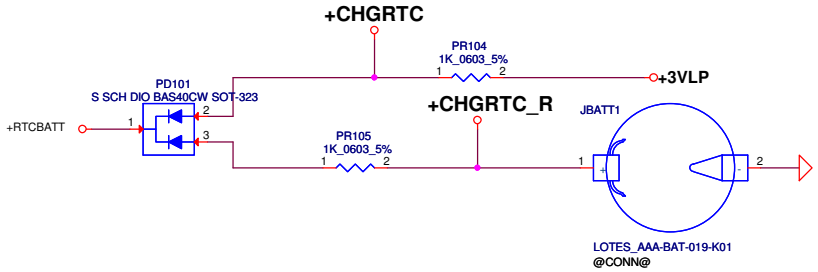

RTC Battery

Security Classification	Compal Secret Data		
Issued Date	2012/12/01	Deciphered Date	2013/07/10

THIS SHEET OF ENGINEERING DRAWING IS THE PROPRIETARY PROPERTY OF COMPAL ELECTRONICS, INC. AND CONTAINS CONFIDENTIAL AND TRADE SECRET INFORMATION. THIS SHEET MAY NOT BE TRANSFERED FROM THE CUSTODY OF THE COMPETENT DIVISION OF R&D DEPARTMENT EXCEPT AS AUTHORIZED BY COMPAL ELECTRONICS, INC. NEITHER THIS SHEET NOR THE INFORMATION IT CONTAINS MAY BE USED BY OR DISCLOSED TO ANY THIRD PARTY WITHOUT PRIOR WRITTEN CONSENT OF COMPAL ELECTRONICS, INC.

Compal Electronics, Inc.

Title: ***PWR-DCIN/PRECHARGE***

Size: Custom | Document Number: *Bay Trail M* | Rev: 0.1

Date: | Sheet 37 of 49

WWW.AliSaler.Com

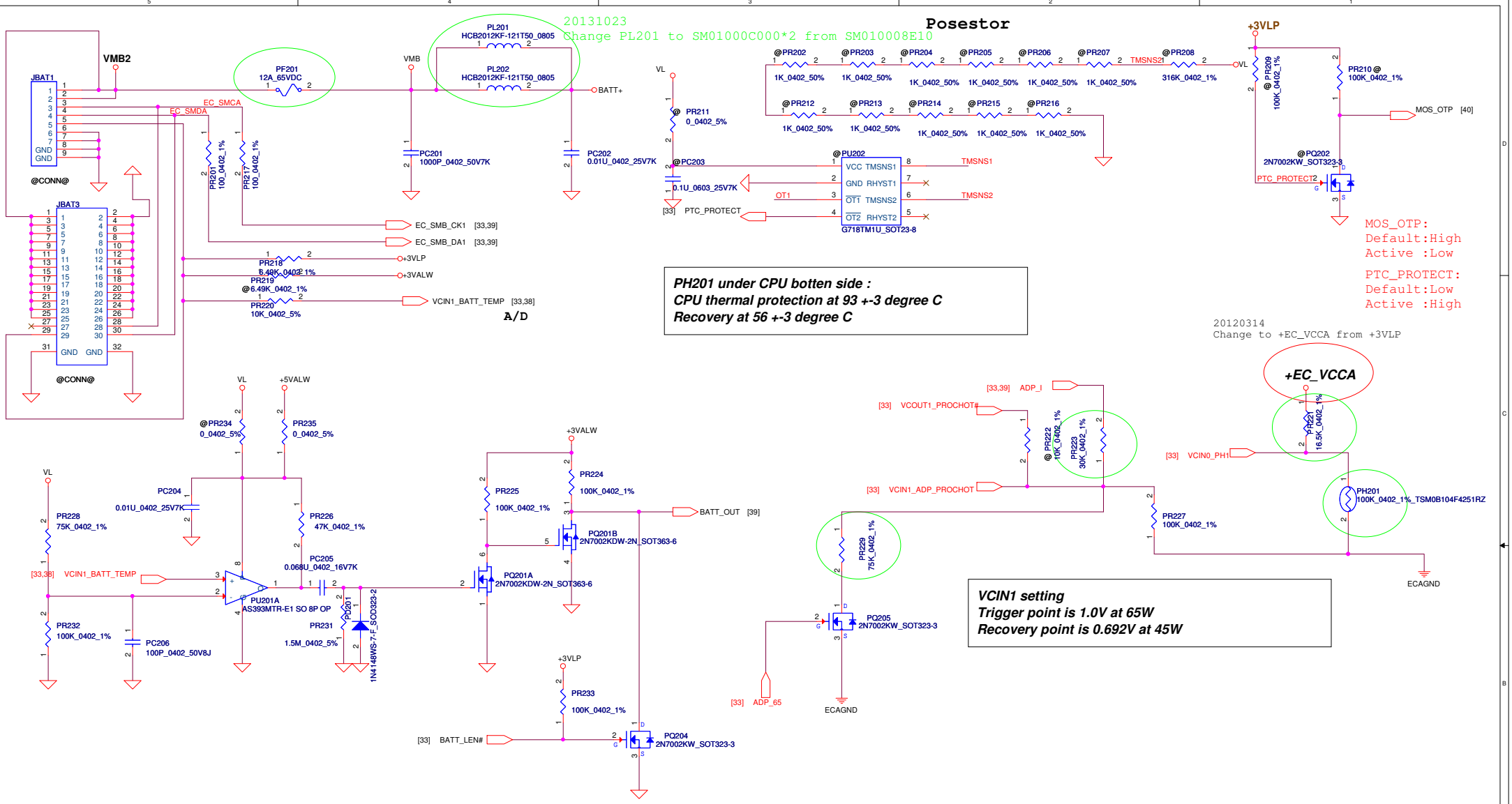

135W: 150W(Turbo_V=1.2) active 135W(Turbo_V=1.072) recovery
90W : 100W(Turbo_V=1.2) active 90W(Turbo_V=0.903) recovery
65W : 70W(Turbo_V=1.2) active 65W(Turbo_V=0.918) recovery
45W : 65W(Turbo_V=1.2) active 45W(Turbo_V=0.829) recovery

WWW.AliSaler.Com

Security Classification	Compal Secret Data		
Issued Date	2013/01/15	Deciphered Date	2015/01/15

THIS SHEET OF ENGINEERING DRAWING IS THE PROPRIETARY PROPERTY OF COMPAL ELECTRONICS, INC. AND CONTAINS CONFIDENTIAL AND TRADE SECRET INFORMATION. THIS SHEET MAY NOT BE TRANSFERED FROM THE CUSTODY OF THE COMPETENT DIVISION OF R&D DEPARTMENT EXCEPT AS AUTHORIZED BY COMPAL ELECTRONICS, INC. NEITHER THIS SHEET NOR THE INFORMATION IT CONTAINS MAY BE USED BY OR DISCLOSED TO ANY THIRD PARTY WITHOUT PRIOR WRITTEN CONSENT OF COMPAL ELECTRONICS, INC.

Compal Electronics, Inc.

Title: PWR-BATTERY CONN/OTP

Size: Custom | Document Number: Bay Trail M | Rev: 0.1

Date: Tuesday, February 18, 2014 | Sheet 38 of 49

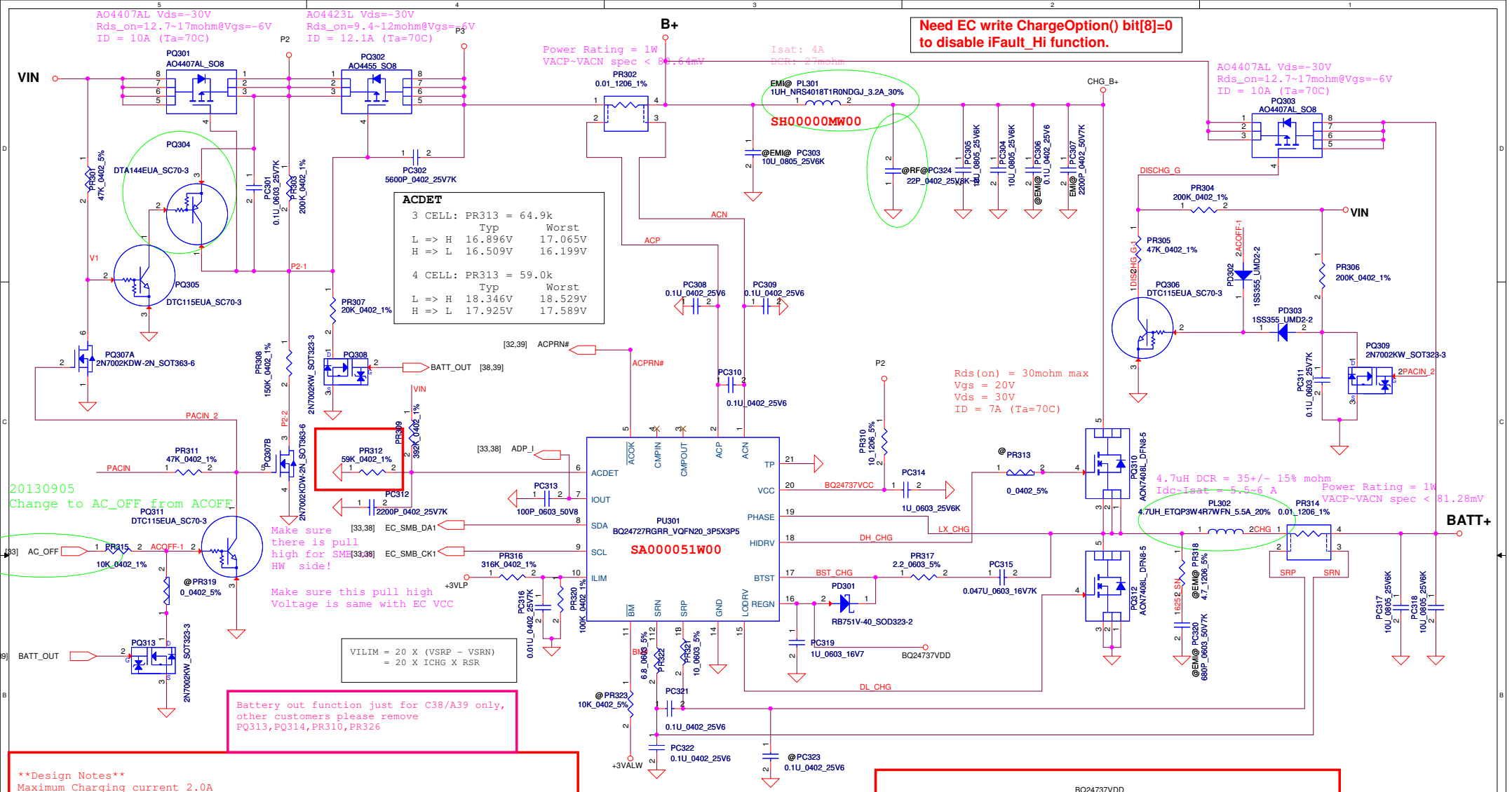

Design Notes
Maximum Charging current 2.0A
Battery discharge power 55W.
#Register Setting
1. 0X12 bit8 set 0 (default 1) to disable IFAULT HI if add ISN choke
2. 0X12 bit3 set 1 (default 0) to enable turbo boost function
3. 0X12 bit[12:11] set 00 (default 11) to set BAT
Depletion Comparator Threshold
Falling Threshold = 59.19% of voltage regulation limit (~2.486V/cell)
4. Disable turbo when AC only
#Circuit Design
1. Make sure there is pull high for SMB on HW side
2. Use 10X10 choke and 3X3 H/L side MOSFET
Charge current 2.0A
Power loss : 1.82W
Power density : 0.81 (15X15)
3. If use 4S per cell 4.35V battery, need change PR313 to 59K for ACDET setting)
4. For hybrid design, need double check PQ301,PQ302,PQ303,PQ309 component rating
#Protect function
1. ACOVP : ACDET voltage > 3.15V
2. Charger timeout : No communication within 175s(default)
3. ACOC : 3.33 X Input current DAC setting(default)
4. CHGOCP : 3/4.5/6A based on current current setting
5. BATOVP : 104%
6. BATLOWV : 2.5V
7. [illegible]
8. [illegible] 5mV (default)
9. [illegible] (default)

Module model information
BQ24737_V1.mdd for dual layer

20131028
1.Change PQ314 to SB000009Q80 2N7002 from BJT SB301150200

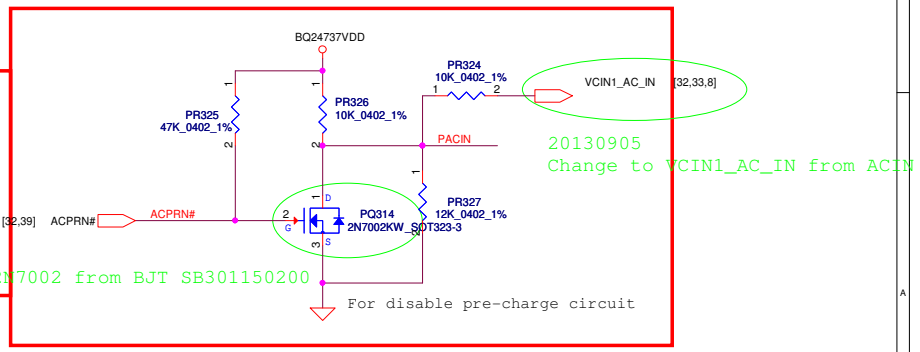

Security Classification	Compal Secret Data		
Issued Date	2012/07/24	Deciphered Date	2012/07/24

THIS SHEET OF ENGINEERING DRAWING IS THE PROPRIETARY PROPERTY OF COMPAL ELECTRONICS, INC. AND CONTAINS CONFIDENTIAL AND TRADE SECRET INFORMATION. THIS SHEET MAY NOT BE TRANSFERED FROM THE CUSTODY OF THE COMPETENT DIVISION OF R&D DEPARTMENT EXCEPT AS AUTHORIZED BY COMPAL ELECTRONICS, INC. NEITHER THIS SHEET NOR THE INFORMATION IT CONTAINS MAY BE USED BY OR DISCLOSED TO ANY THIRD PARTY WITHOUT PRIOR WRITTEN CONSENT OF COMPAL ELECTRONICS, INC.

Compal Electronics, Inc.

Title: Charger_BQ24727

Size: | Document Number: BE_BDW | Rev: 0.1

Date: Tuesday, February 18, 2014 | Sheet 39 of 49

WWW.AliSaler.Com

Module model information

SY8208B_V2.mdd

20130905
Change to 3V/5VALW_PG from SPOK

20131023
Add PR413 to SD028100380 100K_0402_5%

EN1 and EN2 dont't floating

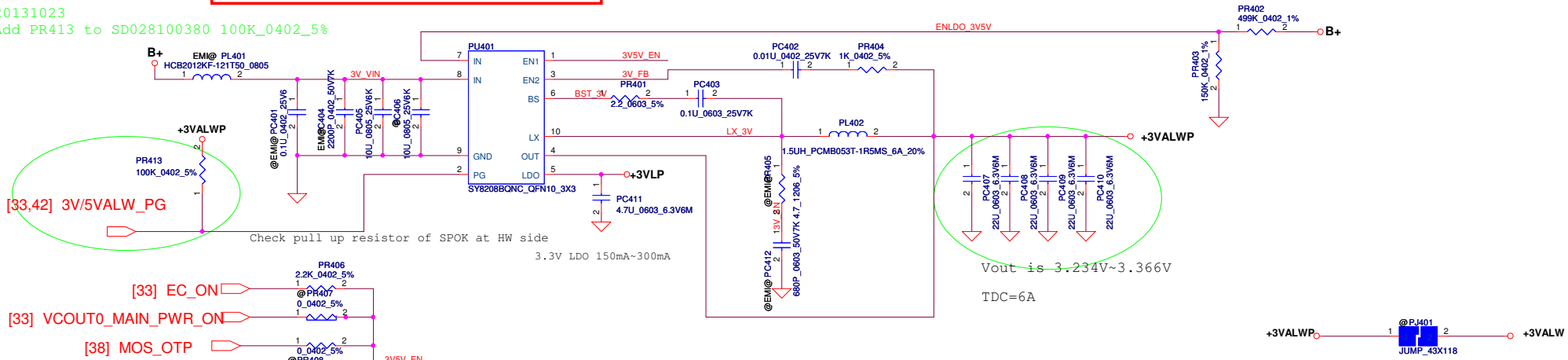

Check pull up resistor of SPOK at HW side

3.3V LDO 150mA~300mA

Vout is 3.234V~3.366V

TDC=6A

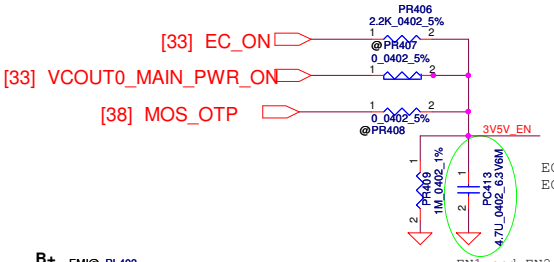

EC VDD0 is +3VL, PC13 UNPOP
EC VDD0 is +3VALW, PC13 POP

EN1 and EN2 dont't floating

20130905
Change PC407,PC408,PC409,PC410,PC421,PC422,PC423,PC424
to SE00000M000 S CER CAP 22U 6.3V M X5R 0603
from SE000000I10 S CER CAP 22UF 6.3V M X5R 0805 H1.25

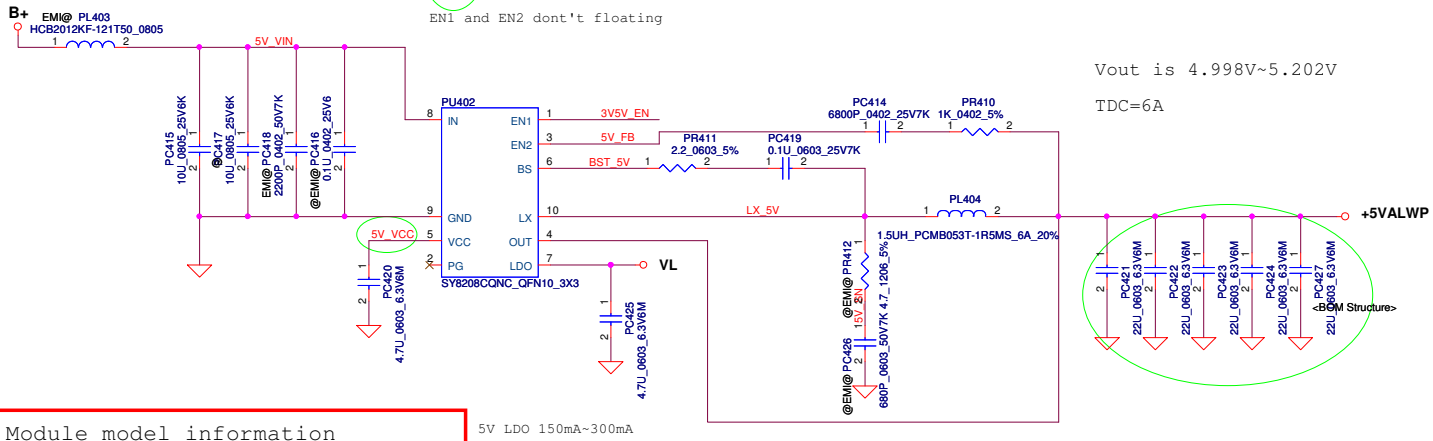

Vout is 4.998V~5.202V

TDC=6A

5V LDO 150mA~300mA

Module model information

SY8208C_V2.mdd

Security Classification	Compal Secret Data		
Issued Date	2011/06/15	Deciphered Date	2012/07/11

THIS SHEET OF ENGINEERING DRAWING IS THE PROPRIETARY PROPERTY OF COMPAL ELECTRONICS, INC. AND CONTAINS CONFIDENTIAL AND TRADE SECRET INFORMATION. THIS SHEET MAY NOT BE TRANSFERED FROM THE CUSTODY OF THE COMPETENT DIVISION OF R&D DEPARTMENT EXCEPT AS AUTHORIZED BY COMPAL ELECTRONICS, INC. NEITHER THIS SHEET NOR THE INFORMATION IT CONTAINS MAY BE USED BY OR DISCLOSED TO ANY THIRD PARTY WITHOUT PRIOR WRITTEN CONSENT OF COMPAL ELECTRONICS, INC.

Compal Electronics, Inc.

Title: +3VALW/+5VALW

Size: B/25 Custom | Document Number | Rev 0.1

Date: Tuesday, February 18, 2014 | Sheet 40 of 49

WWW.AliSaler.Com

Module model information

RT8207M_V1.mdd For Single layer
RT8207M_V2.mdd For Dual layer

Pin19 need pull separate from +1.35VP.
If you have +1.35V and +0.675V sequence question,
you can change from +1.35VP to +1.35VS.

0.675Volt +/- 5%
TDC 0.7A
Peak Current 1A

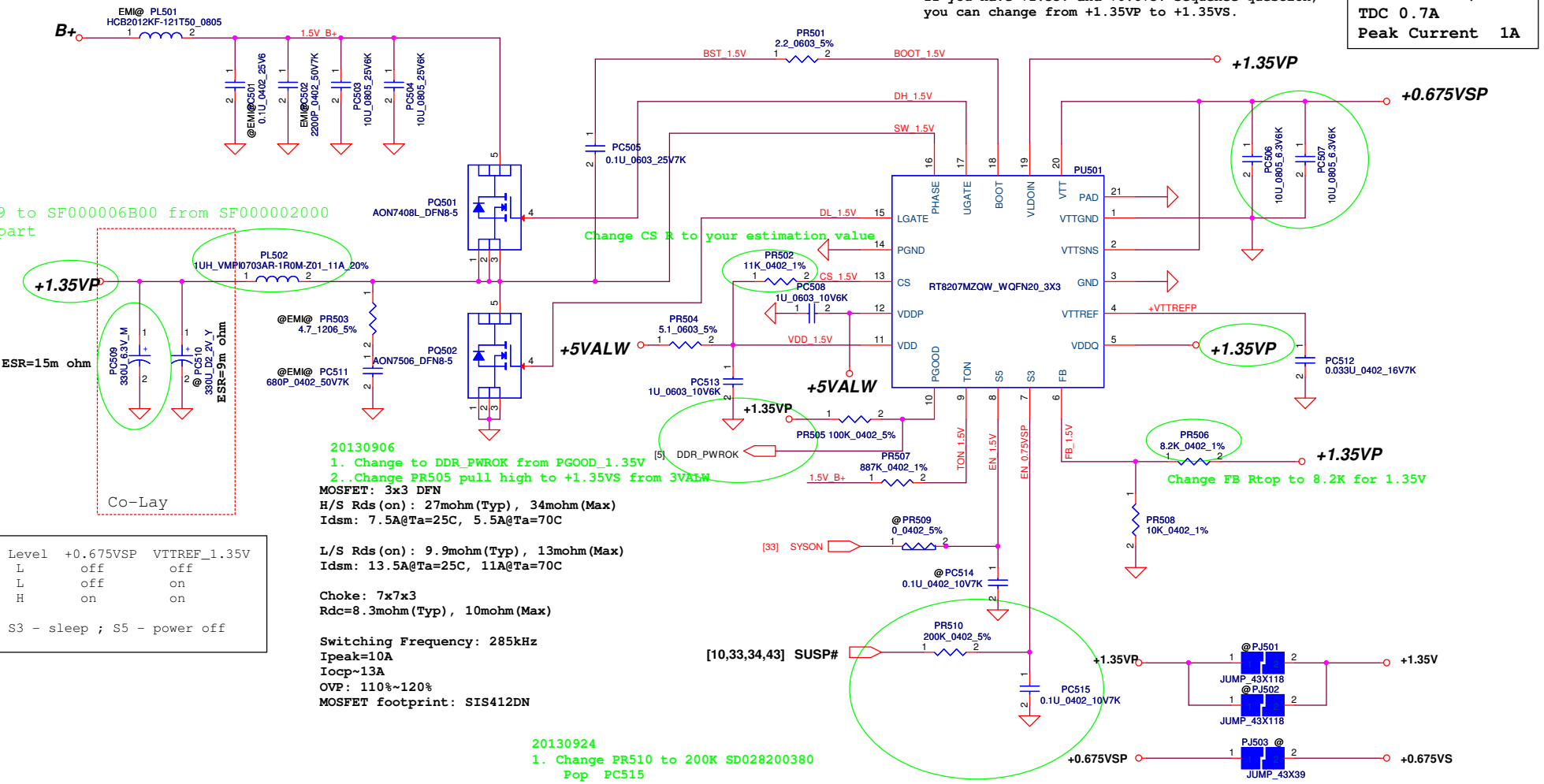

20131023
Change PC509 to SF000006B00 from SF000002000
for common part

20130906
1. Change to DDR_PWROK from PGOOD_1.35V
2..Change PR505 pull high to +1.35VS from 3VALW

MOSFET: 3x3 DFN
H/S Rds(on): 27mohm(Typ), 34mohm(Max)
Idsm: 7.5A@Ta=25C, 5.5A@Ta=70C

L/S Rds(on): 9.9mohm(Typ), 13mohm(Max)
Idsm: 13.5A@Ta=25C, 11A@Ta=70C

Choke: 7x7x3
Rdc=8.3mohm(Typ), 10mohm(Max)

Switching Frequency: 285kHz
Ipeak=10A
Iocp~13A
OVP: 110%~120%
MOSFET footprint: SIS412DN

Mode	Level	+0.675VSP	VTTREF_1.35V
S5	L	off	off
S3	L	off	on
S0	H	on	on

Note: S3 - sleep ; S5 - power off

20130924
1. Change PR510 to 200K SD028200380
Pop PC515

Security Classification	Compal Secret Data		
Issued Date	2010/07/20	Deciphered Date	2012/12/31

THIS SHEET OF ENGINEERING DRAWING IS THE PROPRIETARY PROPERTY OF COMPAL ELECTRONICS, INC. AND CONTAINS CONFIDENTIAL AND TRADE SECRET INFORMATION. THIS SHEET MAY NOT BE TRANSFERED FROM THE CUSTODY OF THE COMPETENT DIVISION OF R&D DEPARTMENT EXCEPT AS AUTHORIZED BY COMPAL ELECTRONICS, INC. NEITHER THIS SHEET NOR THE INFORMATION IT CONTAINS MAY BE USED BY OR DISCLOSED TO ANY THIRD PARTY WITHOUT PRIOR WRITTEN CONSENT OF COMPAL ELECTRONICS, INC.

Compal Electronics, Inc.

Title: +1.35VSP

Size: Custom | Document Number | Rev 0.3

Date: Tuesday, February 18, 2014 | Sheet 41 of 49

WWW.AliSaler.Com

Module model information

SY8032_V1.mdd

20130913
Need to change PC702 to 0603 from 0805

Imax= 2A, Ipeak= 3A
FB=0.6V

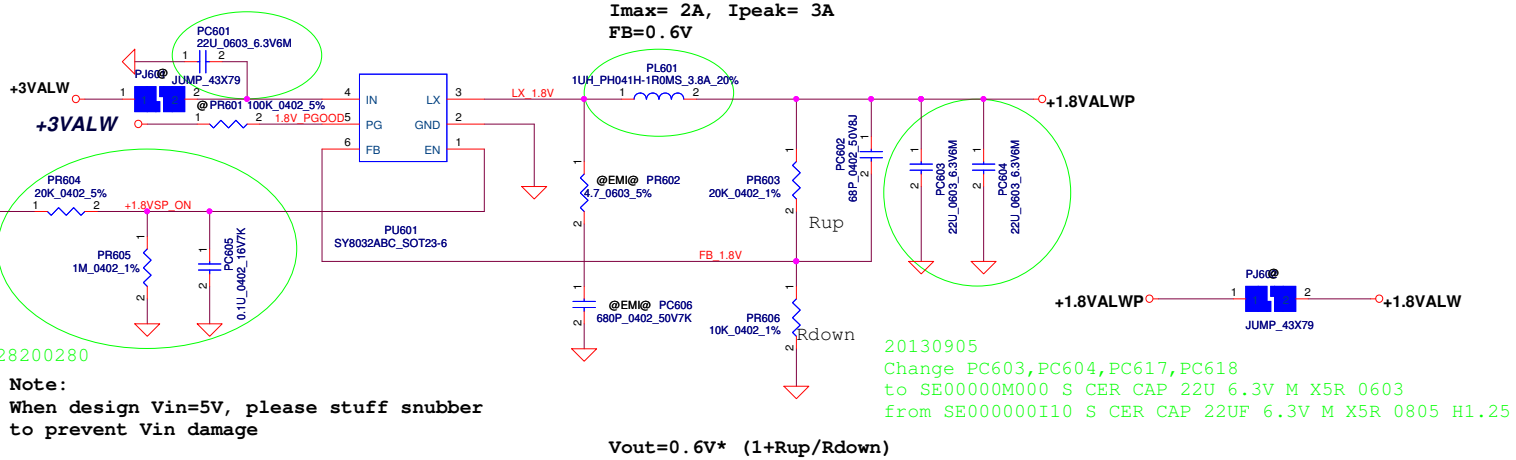

20130905
Change to 3V/5VALW_PG from SPOK

20130924
Change PR604 to 20K SD028200280
Pop PC605 to 0.1u

Note:
When design Vin=5V, please stuff snubber
to prevent Vin damage

20130905
Change PC603,PC604,PC617,PC618
to SE00000M000 S CER CAP 22U 6.3V M X5R 0603
from SE000000I10 S CER CAP 22UF 6.3V M X5R 0805 H1.25

Vout=0.6V* (1+Rup/Rdown)

SY8206D_V1.mdd

Module model information

20130924
1.Change PR607 to 10K SD028100280
Pop PC607 to 0.1U_0402_16V7K SE076104K80

EN pin don't floating
If have pull down resistor at HW side, pls delete PR2

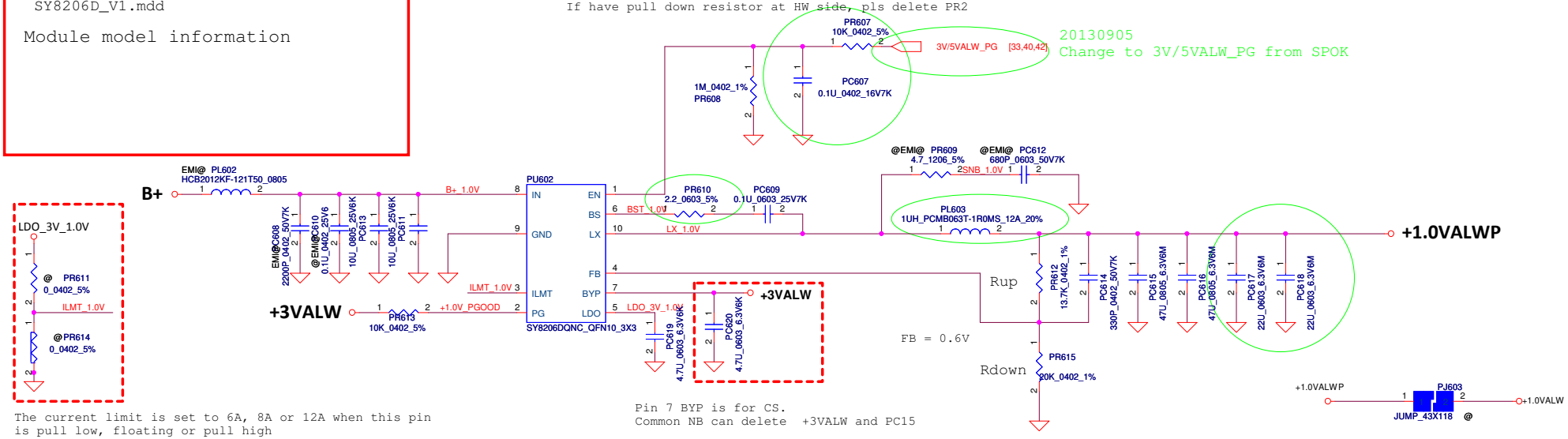

The current limit is set to 6A, 8A or 12A when this pin
is pull low, floating or pull high

Pin 7 BYP is for CS.
Common NB can delete +3VALW and PC15

Security Classification	Compal Secret Data		
Issued Date	2012/12/01	Deciphered Date	2013/07/10

THIS SHEET OF ENGINEERING DRAWING IS THE PROPRIETARY PROPERTY OF COMPAL ELECTRONICS, INC. AND CONTAINS CONFIDENTIAL AND TRADE SECRET INFORMATION. THIS SHEET MAY NOT BE TRANSFERED FROM THE CUSTODY OF THE COMPETENT DIVISION OF R&D DEPARTMENT EXCEPT AS AUTHORIZED BY COMPAL ELECTRONICS, INC. NEITHER THIS SHEET NOR THE INFORMATION IT CONTAINS MAY BE USED BY OR DISCLOSED TO ANY THIRD PARTY WITHOUT PRIOR WRITTEN CONSENT OF COMPAL ELECTRONICS, INC.

Compal Electronics, Inc.

Title: PWR-1.8VALW/1.0VALW

Size: Custom | Document Number | Rev: 0.1

Date: Tuesday, February 18, 2014 | Sheet 42 of 49

WWW.AliSaler.Com

Module model information

20130913
Need to change PC702 to 0603 from 0805

Imax= 2A, Ipeak= 3A
FB=0.6V

DIS:SY8003
UMA:SY8032

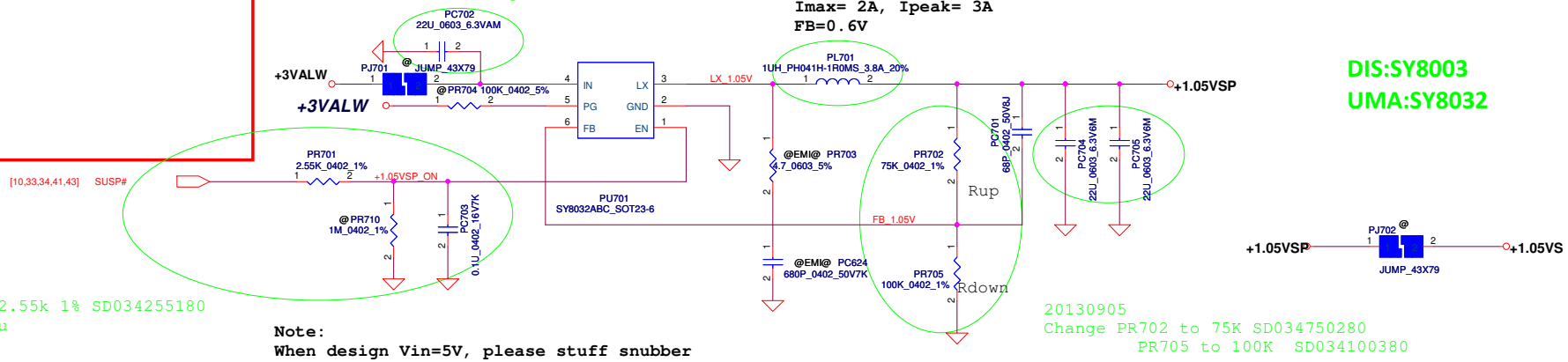

20130924
Change PR701 to 2.55k 1% SD034255180
Pop PC703 to 0.1u
unpop PR710

Note:
When design Vin=5V, please stuff snubber
to prevent Vin damage

Vout=0.6V* (1+Rup/Rdown)

20130905
Change PR702 to 75K SD034750280
PR705 to 100K SD034100380

20130905
Change PC701,PC703,PC704,PC711
to SE00000M000 S CER CAP 22U 6.3V M X5R 0603
from SE000000I10 S CER CAP 22UF 6.3V M X5R 0805 H1.25

2013/5/13
Change PR714 from 100kto 47k
Change PR720 from 47kto 100k

change input cap from 0805 to 0603

VFB=0.6V
Vout=0.6V* (1+Rup/Rdown)

Vout=1.011V

Ultra Low Dropout 0.23V(typical) at 3A Output Current

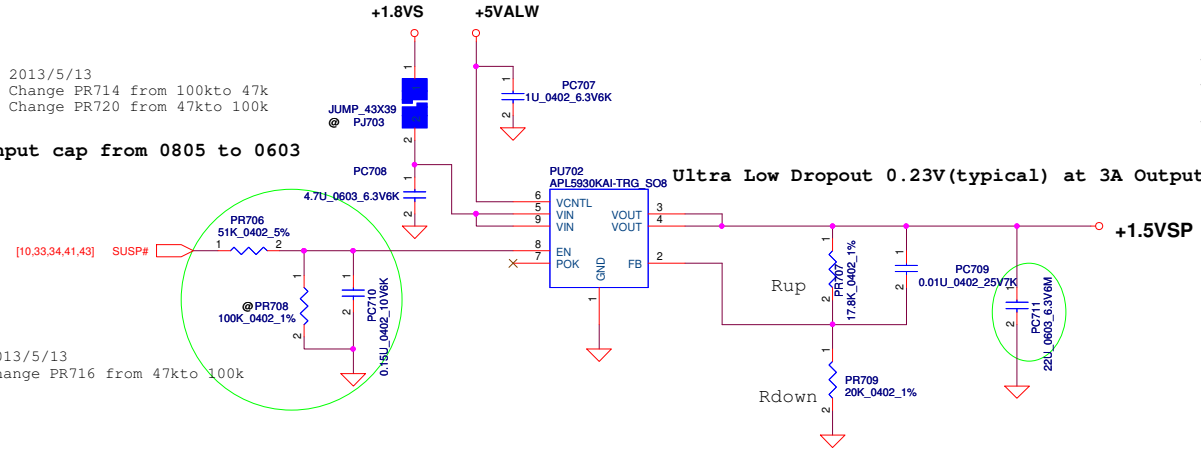

2013/5/13
Change PR716 from 47kto 100k

20130924
Change PR706 to 51K SD028510280
Pop PC710 0.15U_0402_10V6K SE00000H300
unpop PR708

Vout=0.8V* (1+Rup/Rdown)
Vout=1.512V

Security Classification	Compal Secret Data			Compal Electronics, Inc.
Issued Date	2012/12/01	Deciphered Date	2013/07/10	Title: PWR-1.05VSP/1.5VSP
THIS SHEET OF ENGINEERING DRAWING IS THE PROPRIETARY PROPERTY OF COMPAL ELECTRONICS, INC. AND CONTAINS CONFIDENTIAL AND TRADE SECRET INFORMATION. THIS SHEET MAY NOT BE TRANSFERED FROM THE CUSTODY OF THE COMPETENT DIVISION OF R&D DEPARTMENT EXCEPT AS AUTHORIZED BY COMPAL ELECTRONICS, INC. NEITHER THIS SHEET NOR THE INFORMATION IT CONTAINS MAY BE USED BY OR DISCLOSED TO ANY THIRD PARTY WITHOUT PRIOR WRITTEN CONSENT OF COMPAL ELECTRONICS, INC.				Size: Custom; Document Number; Rev: 0.1; Date: ; Sheet 43 of 49

WWW.AliSaler.Com

Security Classification	Compal Secret Data		
Issued Date	2012/04/19	Deciphered Date	2015/04/19

THIS SHEET OF ENGINEERING DRAWING IS THE PROPRIETARY PROPERTY OF COMPAL ELECTRONICS, INC. AND CONTAINS CONFIDENTIAL AND TRADE SECRET INFORMATION. THIS SHEET MAY NOT BE TRANSFERED FROM THE CUSTODY OF THE COMPETENT DIVISION OF R&D DEPARTMENT EXCEPT AS AUTHORIZED BY COMPAL ELECTRONICS, INC. NEITHER THIS SHEET NOR THE INFORMATION IT CONTAINS MAY BE USED BY OR DISCLOSED TO ANY THIRD PARTY WITHOUT PRIOR WRITTEN CONSENT OF COMPAL ELECTRONICS, INC.

Compal Electronics, Inc.

Title

Size	Document Number	Rev
Custom		0.2

Date: Tuesday, February 18, 2014 | Sheet 44 of 11

WWW.AliSaler.Com

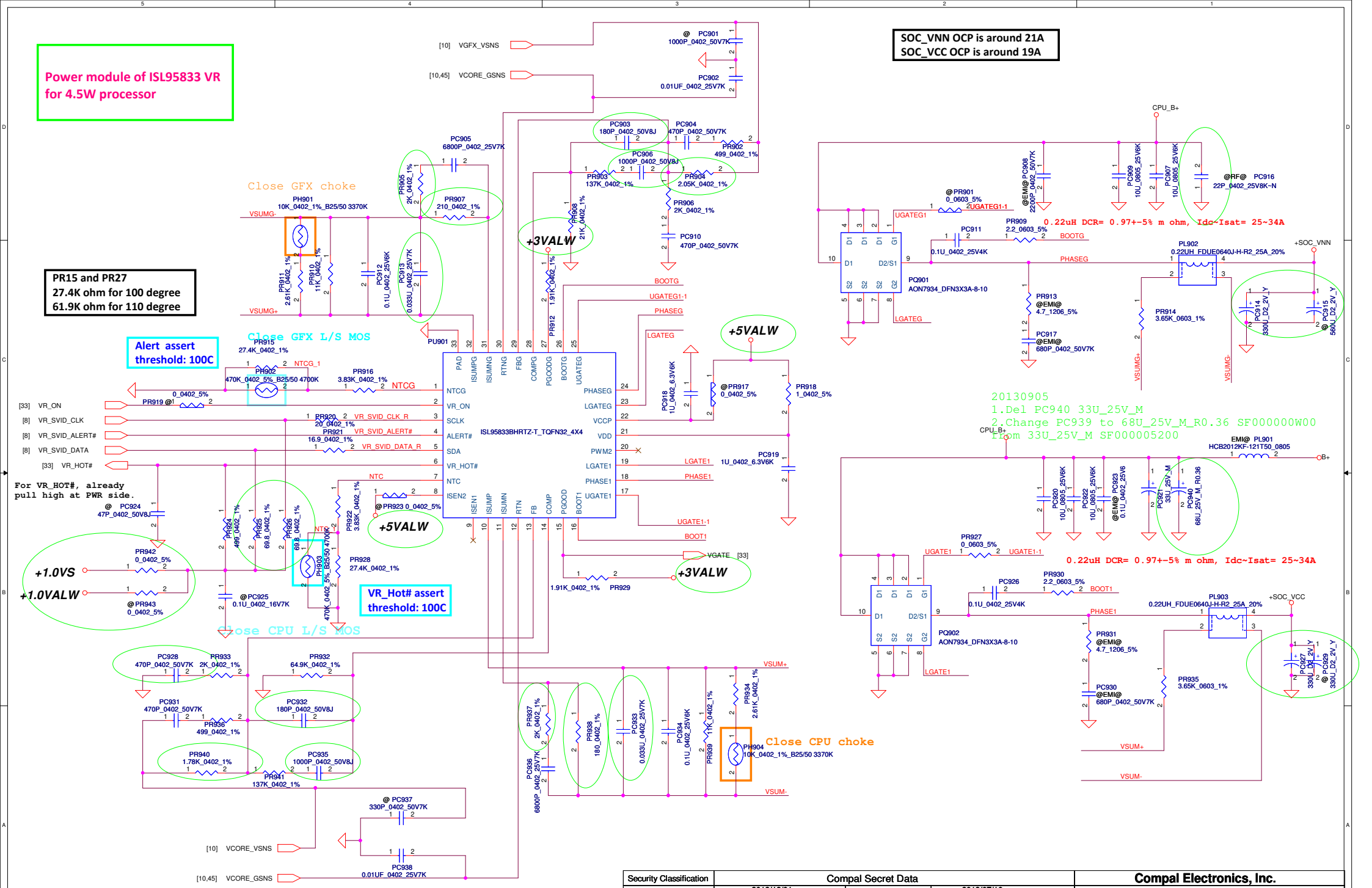

Security Classification	Compal Secret Data		
Issued Date	2012/12/01	Deciphered Date	2013/07/10

THIS SHEET OF ENGINEERING DRAWING IS THE PROPRIETARY PROPERTY OF COMPAL ELECTRONICS, INC. AND CONTAINS CONFIDENTIAL AND TRADE SECRET INFORMATION. THIS SHEET MAY NOT BE TRANSFERED FROM THE CUSTODY OF THE COMPETENT DIVISION OF R&D DEPARTMENT EXCEPT AS AUTHORIZED BY COMPAL ELECTRONICS, INC. NEITHER THIS SHEET NOR THE INFORMATION IT CONTAINS MAY BE USED BY OR DISCLOSED TO ANY THIRD PARTY WITHOUT PRIOR WRITTEN CONSENT OF COMPAL ELECTRONICS, INC.

Compal Electronics, Inc.

Title: *PWR-CPU_CORE*

Size: Custom | Document Number | Rev 0.1

Date: | Sheet 45 of 49

WWW.AliSaler.Com

22uF 0805 size change to 0603

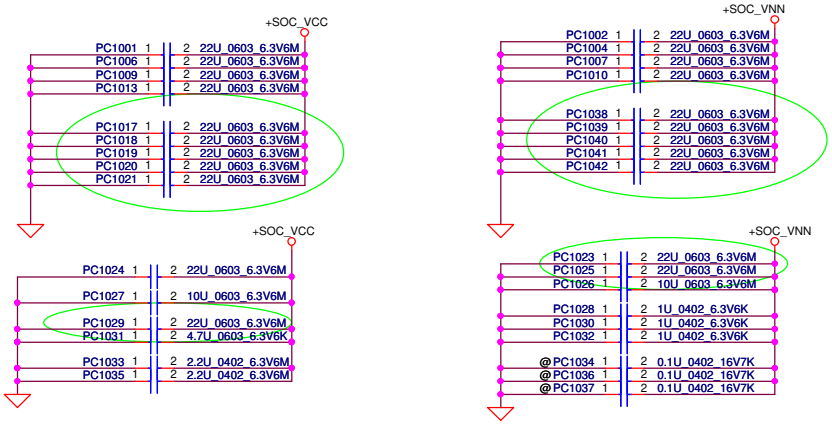

Security Classification	Compal Secret Data		
Issued Date	2012/12/01	Deciphered Date	2013/07/10

THIS SHEET OF ENGINEERING DRAWING IS THE PROPRIETARY PROPERTY OF COMPAL ELECTRONICS, INC. AND CONTAINS CONFIDENTIAL AND TRADE SECRET INFORMATION. THIS SHEET MAY NOT BE TRANSFERED FROM THE CUSTODY OF THE COMPETENT DIVISION OF R&D DEPARTMENT EXCEPT AS AUTHORIZED BY COMPAL ELECTRONICS, INC. NEITHER THIS SHEET NOR THE INFORMATION IT CONTAINS MAY BE USED BY OR DISCLOSED TO ANY THIRD PARTY WITHOUT PRIOR WRITTEN CONSENT OF COMPAL ELECTRONICS, INC.

Compal Electronics, Inc.

Title: *PWR-CPU_CORE_CAP*

Size: Custom | Document Number | Rev: 0.1

Date: | Sheet 46 of 49

WWW.AliSaler.Com

Version change list (P.I.R. List)

Item	Fixed Issue	Reason for change	Rev.	PG#	Modify List	Date	Phase
1							
2							
3							
4							
5							
6							
7							

Security Classification	Compal Secret Data			Compal Electronics, Inc.
Issued Date	2012/12/01	Deciphered Date	2013/07/10	Title: PWR-PIR
				Size: Custom; Document Number: ; Rev: 0.1
				Date: ; Sheet 47 of 49

THIS SHEET OF ENGINEERING DRAWING IS THE PROPRIETARY PROPERTY OF COMPAL ELECTRONICS, INC. AND CONTAINS CONFIDENTIAL AND TRADE SECRET INFORMATION. THIS SHEET MAY NOT BE TRANSFERED FROM THE CUSTODY OF THE COMPETENT DIVISION OF R&D DEPARTMENT EXCEPT AS AUTHORIZED BY COMPAL ELECTRONICS, INC. NEITHER THIS SHEET NOR THE INFORMATION IT CONTAINS MAY BE USED BY OR DISCLOSED TO ANY THIRD PARTY WITHOUT PRIOR WRITTEN CONSENT OF COMPAL ELECTRONICS, INC.

WWW.AliSaler.Com