< NAPA >
TAURUS2 BLOCK DIAGRAM
Yonah/Calistoga

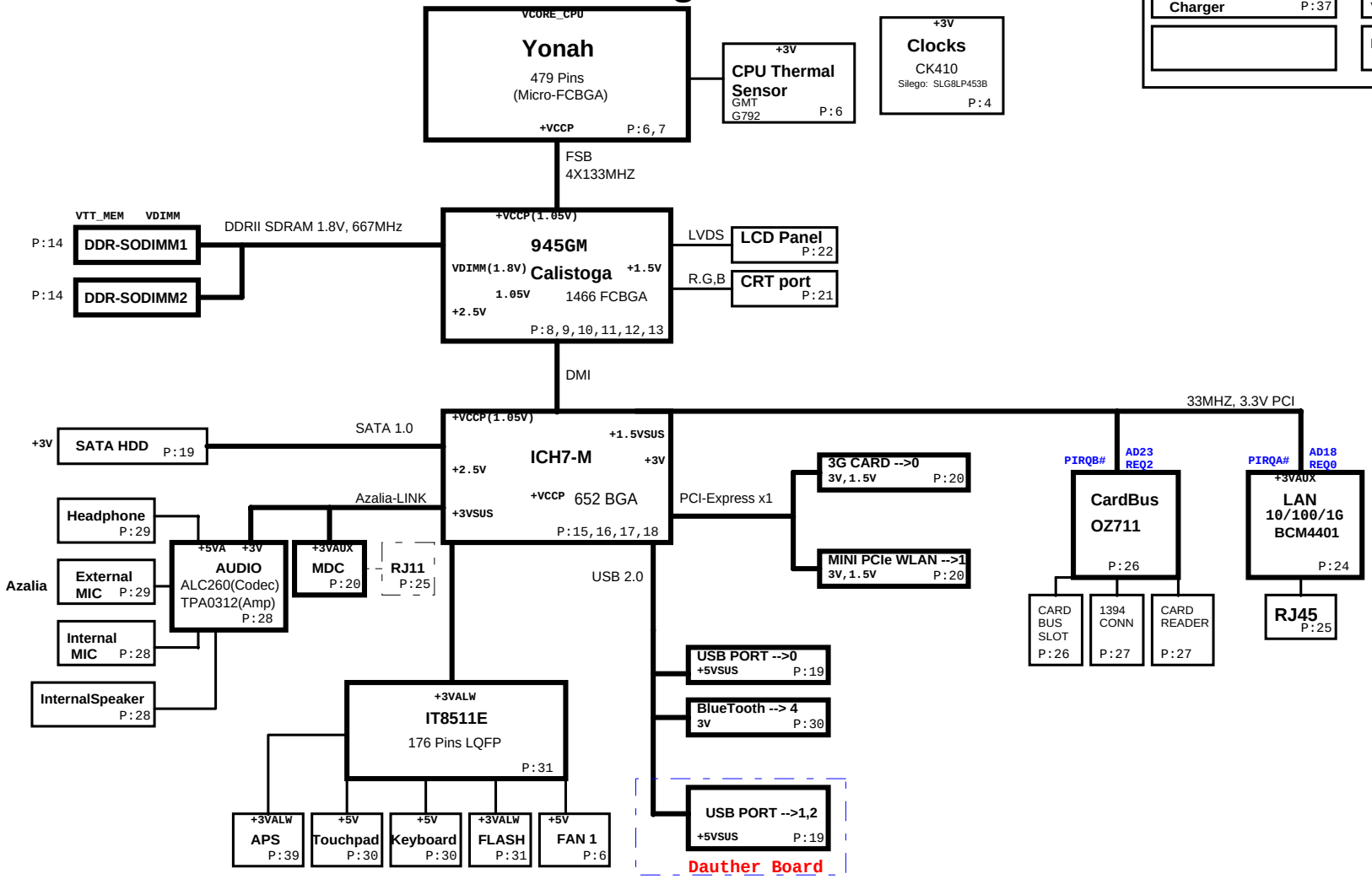

DC/DC & Charger

CPU VR	ADI3207		P:36
AC/BATT Connector			P:37
BATT Charger	OZ8602G_N		P:37
Switching			
1.5V,+VCCP		OZ813	P:34
3V,5V		MAX8734	P:33
LDO			
2.5V		MAX8887EZK25	P:35
VTT_MEM(0.9V)		MAX8632	P:35
VDIMM(1.8V)		MAX8632	P:35
RTC Battery			P:15

PVT Schematics Release

lenovo联想 LENOVO.NOD
HuZW LiXINP LiYJK LvXDA

Title: BLOCK DIAGRAM

Size: C | Document Number: Taurus2 | Rev: s0.1

Date: Thursday, June 29, 2006 | Sheet 1 of 40

"PROPERTY NOTE: this document contains information confidential and property to LENOVO PND and shall not be reproduced or transferred to other documents or disclosed to others or used for any purpose other than that for which it was obtained without the expressed written consent of LENOVO PND."

WWW.AliSaler.Com

lenovo联想	LENOVO.NOD HuZW LiXINP LiYJK LvXDA
Title	Power Sequence Block
Size C	Document Number Taurus2
Rev	s0.1
Date: Thursday, June 29, 2006	Sheet 2 of 40

"PROPERTY NOTE: this document contains information confidential and property to LENOVO PND and shall not be reproduced or transferred to other documents or disclosed to others or used for any purpose other than that for which it was obtained without the expressed written consent of LENOVO PND."

WWW.AliSaler.Com

ATI VGA PCIE
power

INDEX

Pg#	Description	DNI LIST
1	Block Diagram	
2	Power Sequence Block	
3	Frontpage	
4	Clock Generator	
6,7	Yonah CPU	
8-13	Calistoga	
14	DDR SO-DIMM	
15-18	ICH7-M	
19	USB & SATA	
20	MINI PCIE, WWAN & MDC	
21	CRT	
22	LCD CONN	
23	SWITCH & LED	
24	BCM4401/5702 LAN	
25	RJ11&RJ45	
26	Cardbus OZ711	
27	CARDREADER & 1394	
28	AUDIO	
29	AUDIO JACK	
30	KB & TP & BT	
31	IT8511E & FLASH	
32	DISCHARGE	
33	SYSTEM POWER	
34	VCCP & GMCH CORE	
35	DDR CORE	
36	CPU CORE	
37	BATTERY CHARGER	
38	EMI PADs& Screws	
39	APS	
40	CHANGE LIST	

Power & Ground

Label	Pg#	Description	Control Signal
ADIN ADIN	37	AC ADAPTER (19V)	
		MAIN BATTERY + (10~17V)	
VIN VIN	22,33,34,35,36,37	MAIN POWER (10~20V)	
VCCRTC VCCRTC	15,18,31	RTC & PCL POWER (3_3V)	
+3VALW +3VALW	15,17,22,23,30,31,33,37,39	EC 3V always power	
+5VALW +5VALW	32,33	5V always power	
3VAUX 3VAUX	20,24,25,33,34	LAN power	3VAUXEN
		ICH7-M 1.5V SUS power	SUSON
VDIMM VDIMM	8,10,14,32,35	DDRII RAM 1.8V power	SUSON
+3VSUS +3VSUS	16,17,18,23,31,32,33,35	3V	SUSON
+5VSUS +5VSUS	18,19,32,33	5V	SUSON
+1.5V +1.5V	10,11,12,17,18,20,32,34	AGP I/O power	MAINON
+3V +3V	4,6,8,11,12,14,15,16,17,18,19,20,21,22,23,24,26,27,28,30,31,32,33,36	+3V	MAINON
+5V +5V	6,18,19,21,26,28,30,31,32,33,36	+5V	MAINON
+5VA +5VA	28	AUDIO analog 5V power	MAINON
+5V_FAN +5V_FAN	6	FAN 5V power	VFAN
			RBAYON#
MOSVCC MOSVCC	22,26,27,30,32,33	High Voltage to control MOS	MAINON
VCORE_CPU VCORE_CPU	7,32,36	CPU power	VRON
+VCCP +VCCP	4,6,7,8,10,11,15,18,32,34	CPUIO powers(1.05V)	MAINON
REF3V REF3V	37	EC analog 3V power	REFON
GND	ALL PAGES	DIGITAL GROUND	
AUDGND	28,29	AUDIO GND	

lenovo联想

LENOVO.NOD
HuZW LiXINP LiYJK LvXDA

Title: Frontpage

Size: C | Document Number: Taurus2 | Rev: s0.1

Date: Thursday, June 29, 2006 | Sheet 3 of 40

"PROPERTY NOTE: this document contains information confidential and property to LENOVO PND and shall not be reproduced or transferred to other documents or disclosed to others or used for any purpose other than that for which it was obtained without the expressed written consent of LENOVO PND."

WWW.AliSaler.Com

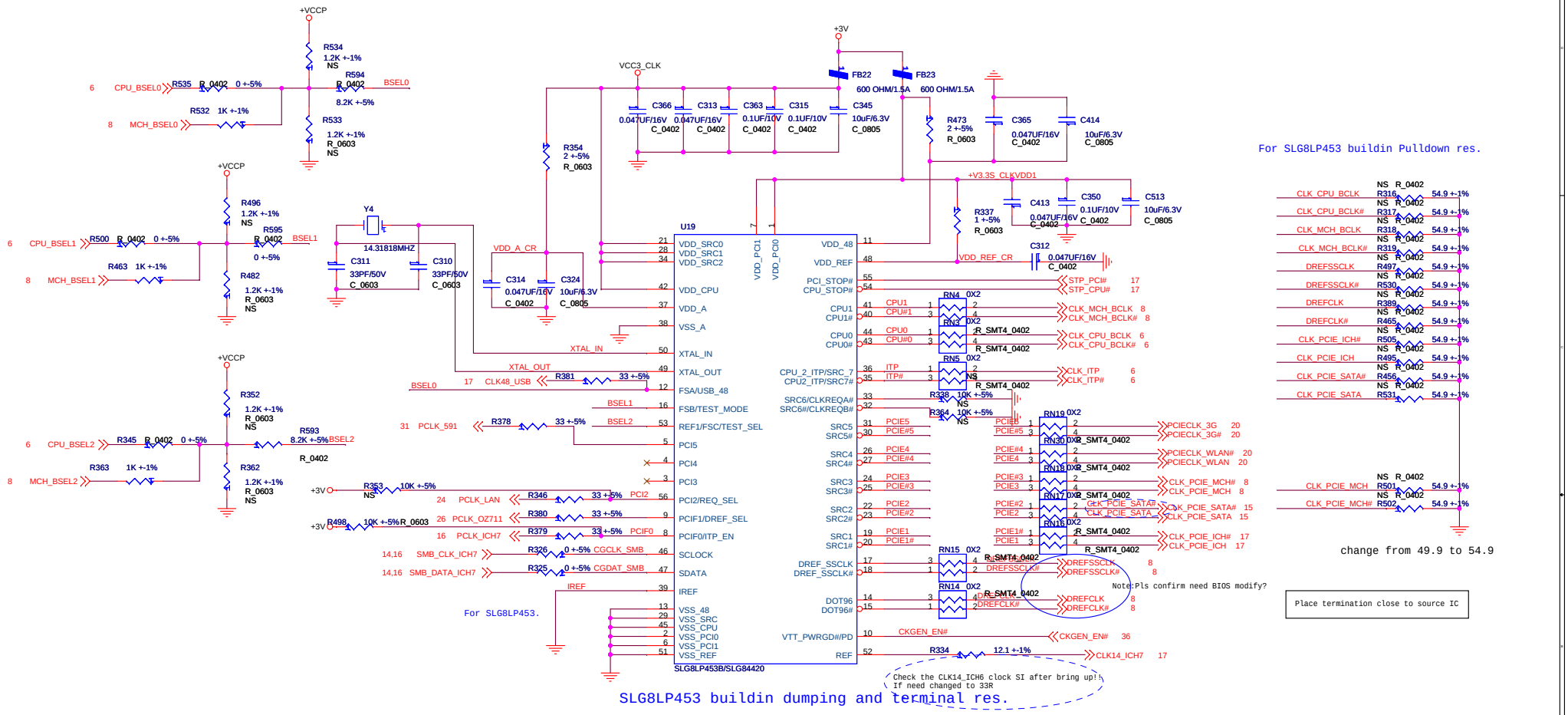

FS_C	FS_B	FS_A	CPU(MHz)
0	0	0	266.6
0	0	1	133.3
0	1	0	200.0
0	1	1	166.6
1	0	0	333.3
1	0	1	100.0
1	1	0	400.0
1	1	1	Reserve

lenovo联想

LENOVO.NOD
HuZW LiXINP LiYJK LvXDA

Title: CLOCK GENERATOR

Size: Custom | Document Number: Taurus2 | Rev: s0.1

Date: Thursday, June 29, 2006 | Sheet 4 of 40

"PROPERTY NOTE: this document contains information confidential and property to LENOVO PND and shall not be reproduced or transferred to other documents or disclosed to others or used for any purpose other than that for which it was obtained without the expressed written consent of LENOVO PND."

WWW.AliSaler.Com

lenovo联想	LENOVO.NOD	
Title	THERMAL MONITOR/ITP	
Size C	Document Number Taurus2	Rev V0.1
Date: Thursday, June 29, 2006	Sheet 5 of 40	

"PROPERTY NOTE: this document contains information confidential and property to LENOVO PND and shall not be reproduced or transferred to other documents or disclosed to others or used for any purpose other than that for which it was obtained without the expressed written consent of LENOVO PND."

WWW.AliSaler.Com

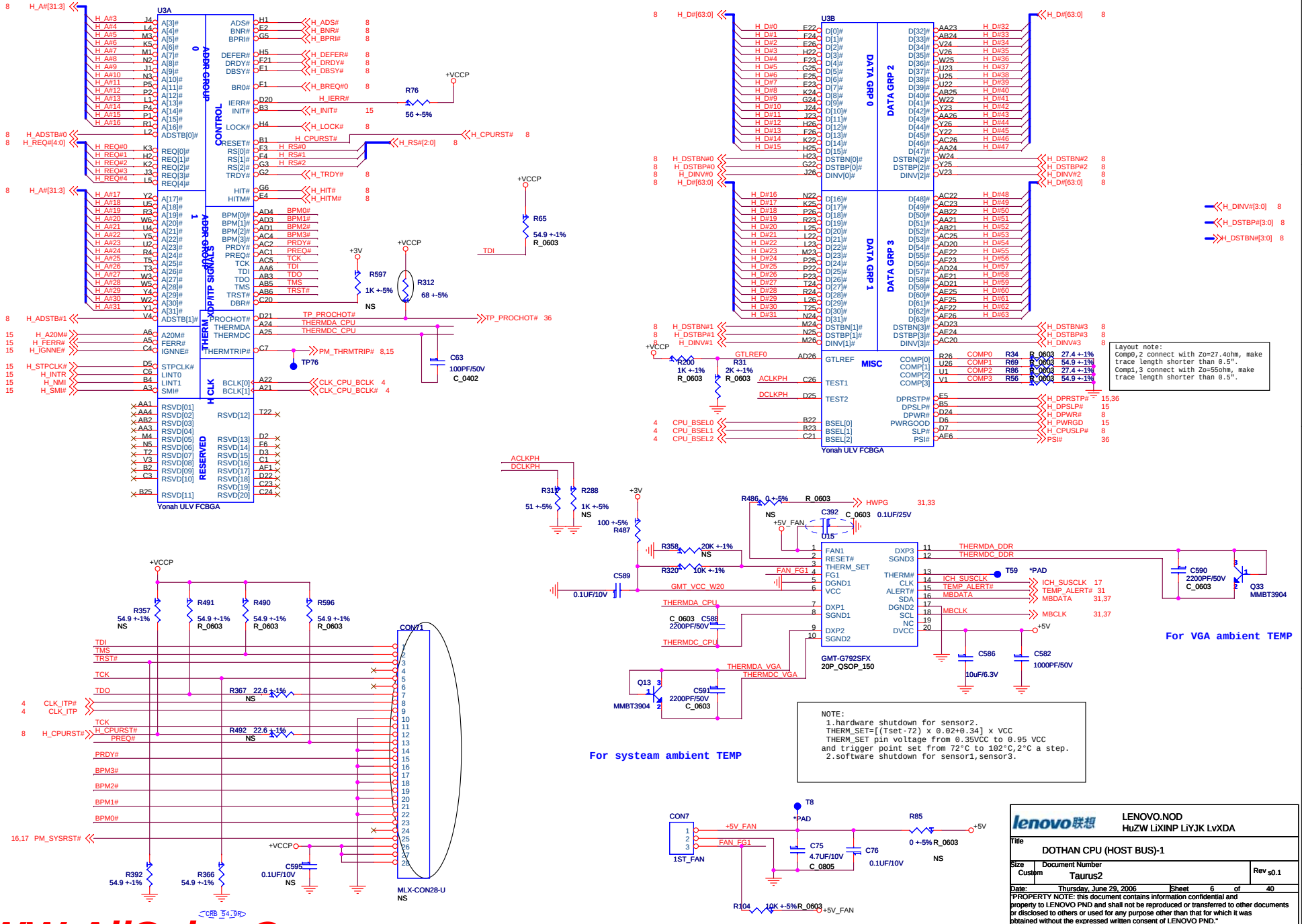

WWW.AliSaler.Com

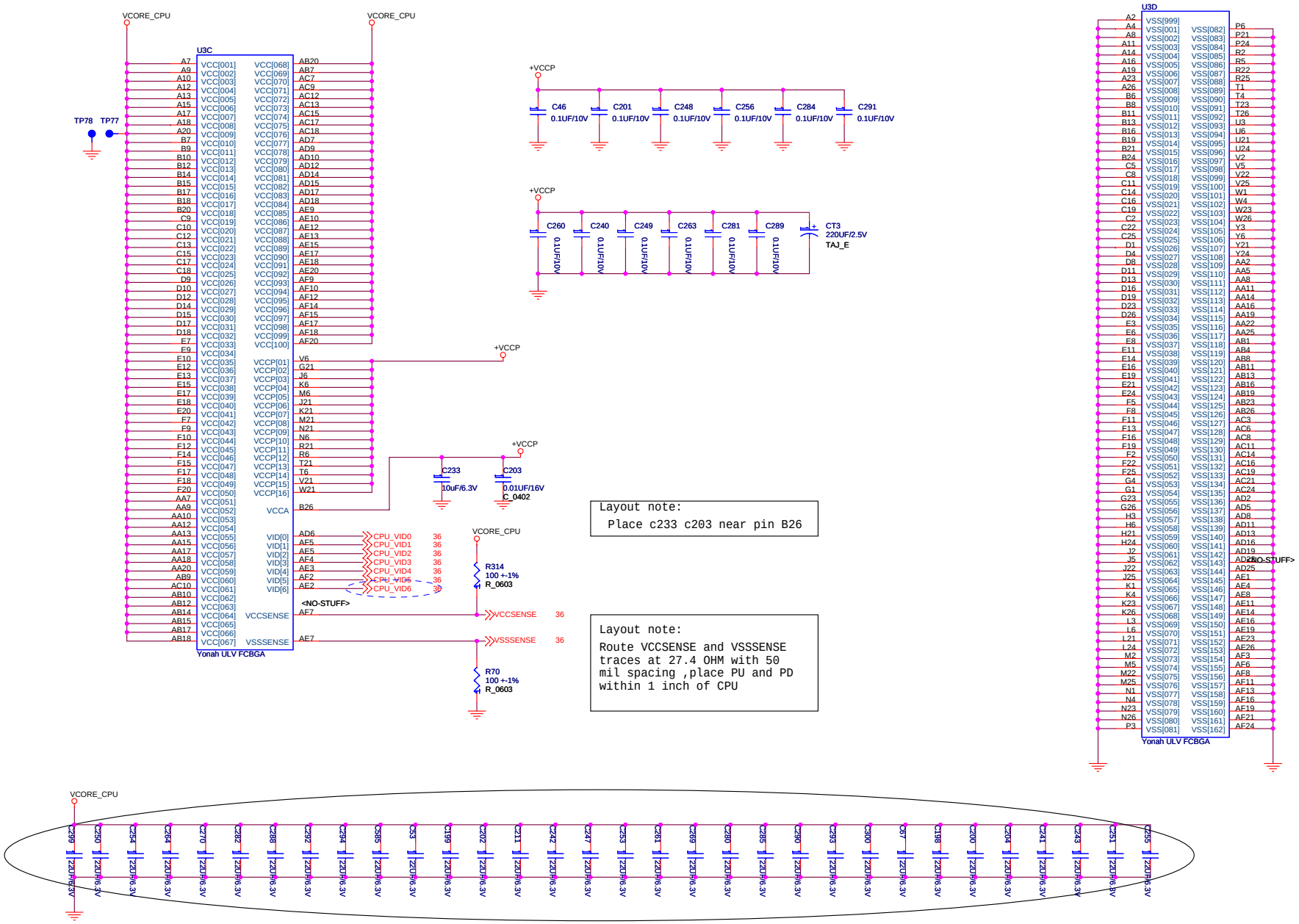

Layout note:
Place c233 c203 near pin B26

Layout note:
Route VCCSENSE and VSSSENSE traces at 27.4 OHM with 50 mil spacing ,place PU and PD within 1 inch of CPU

lenovo联想

LENOVO.NOD
HuZW LiXINP LiYJK LvXDA

Title: DOTHAN CPU (POWER/NC)-2

Size: Custom | Document Number: Taurus2 | Rev: s0.1

Date: Thursday, June 29, 2006 | Sheet 7 of 40

"PROPERTY NOTE: this document contains information confidential and property to LENOVO PND and shall not be reproduced or transferred to other documents or disclosed to others or used for any purpose other than that for which it was obtained without the expressed written consent of LENOVO PND."

WWW.AliSaler.Com

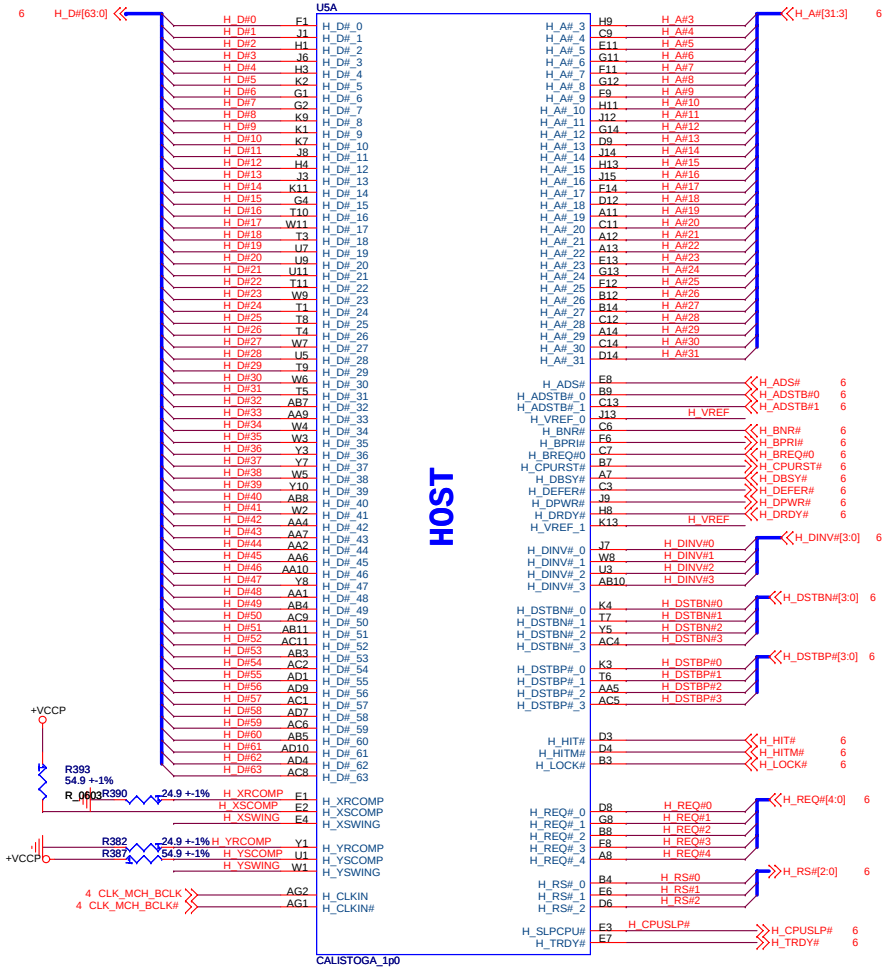

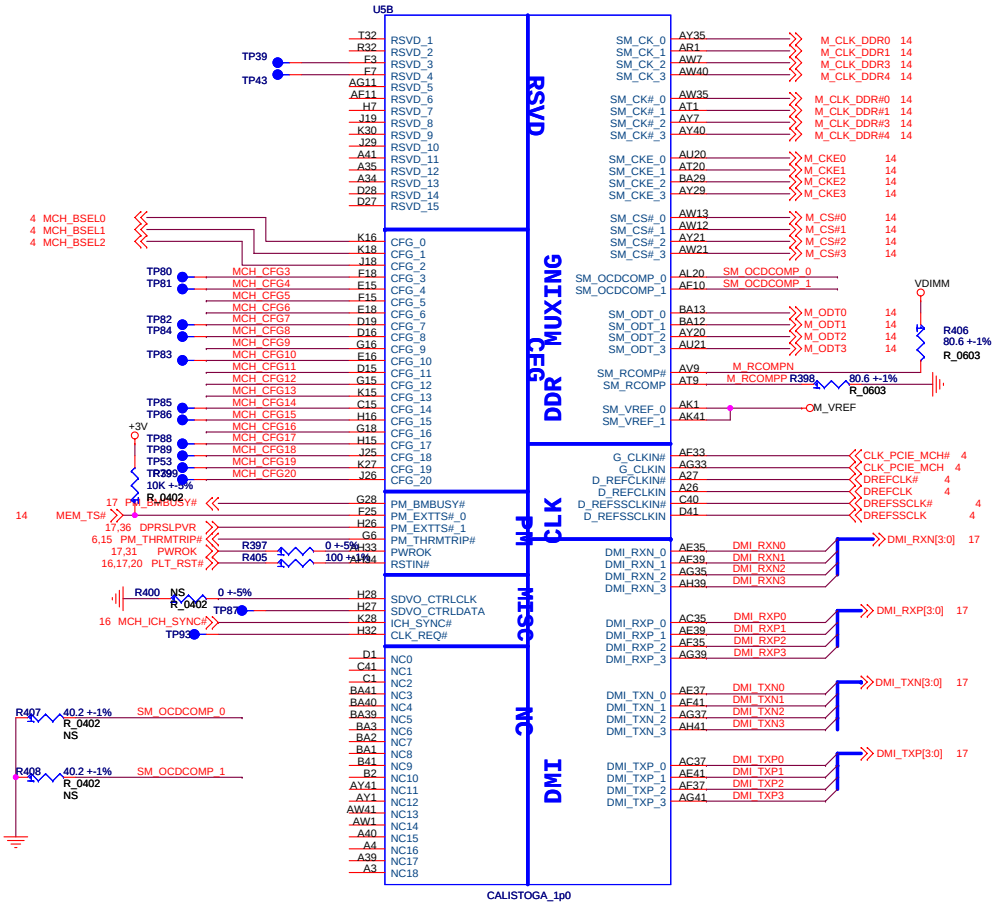

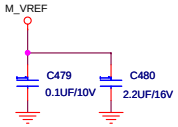

placed close to VREF pins
of DDR2 SO-DIMM

LEVEL	0	1
CFG5	DMI x2	DMI x4 (default)
CFG6	Moby Dick	Calistoga
CFG9	Reverse Lanes	Normal Operation (default)
CFG11	Calistoga	Moby Dick
CFG12	Reserved	Reserved
CFG13	Reserved	Reserved
CFG16	Dynamic ODT Disabled	Dynamic ODT Enabled (default)

CFG[17:3] INTERNAL PULLUP
CFG[20:18] INTERNAL
PULLDOWN

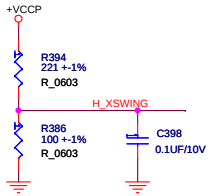

Layout Note:10mil width

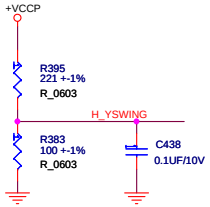

Layout Note:10mil width

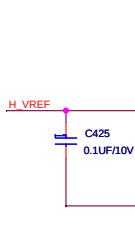

Layout Note:close to GMCH less than
100 mils

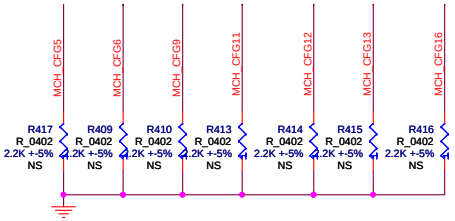

lenovo联想

LENOVO.NOD
HuZW LiXINP LiYJK LvXDA

Title: MCH-M_A (HOST,HUB,VCC)

Size: Custom | Document Number: Taurus2 | Rev: s0.1

Date: Thursday, June 29, 2006 | Sheet 8 of 40

"PROPERTY NOTE: this document contains information confidential and property to LENOVO PND and shall not be reproduced or transferred to other documents or disclosed to others or used for any purpose other than that for which it was obtained without the expressed written consent of LENOVO PND."

WWW.AliSaler.Com

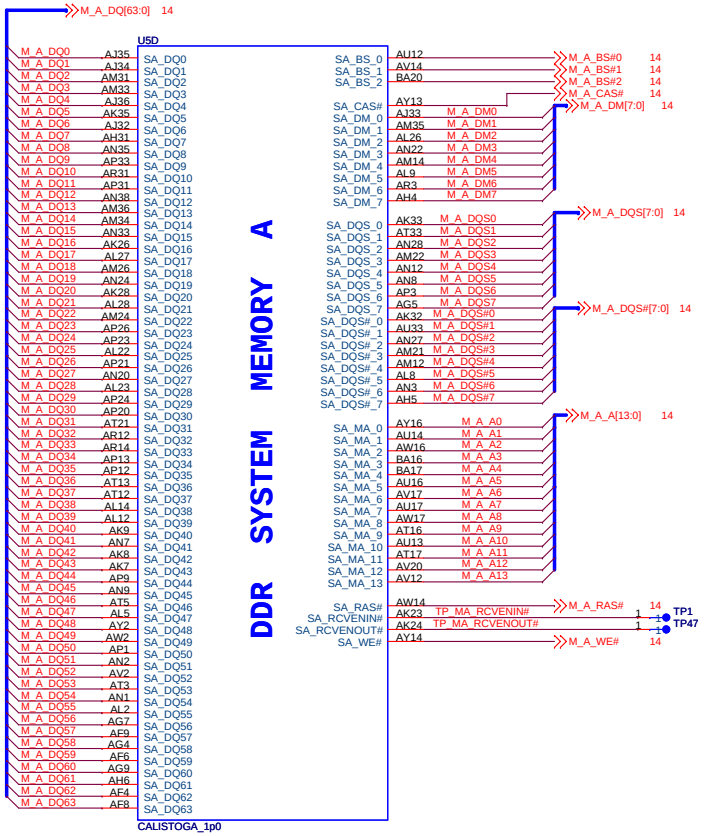

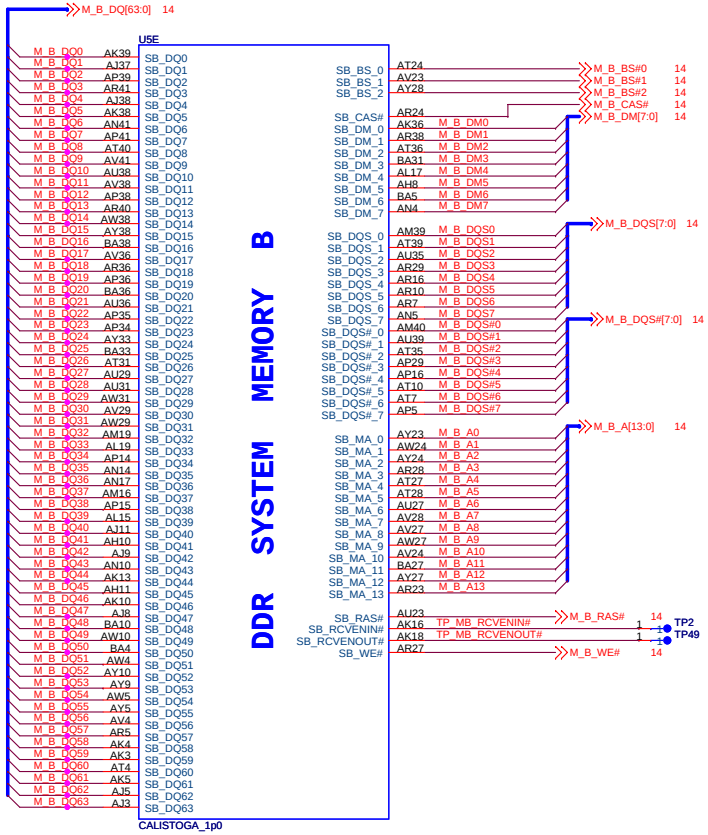

lenovo联想

LENOVO.NOD
HuZW LiXINP LiYJK LvXDA

Title: MCH-M_B (AGP, GND)

Size: Custom | Document Number: Taurus2 | Rev: s0.1

Date: Thursday, June 29, 2006 | Sheet 9 of 40

"PROPERTY NOTE: this document contains information confidential and property to LENOVO PND and shall not be reproduced or transferred to other documents or disclosed to others or used for any purpose other than that for which it was obtained without the expressed written consent of LENOVO PND."

WWW.AliSaler.Com

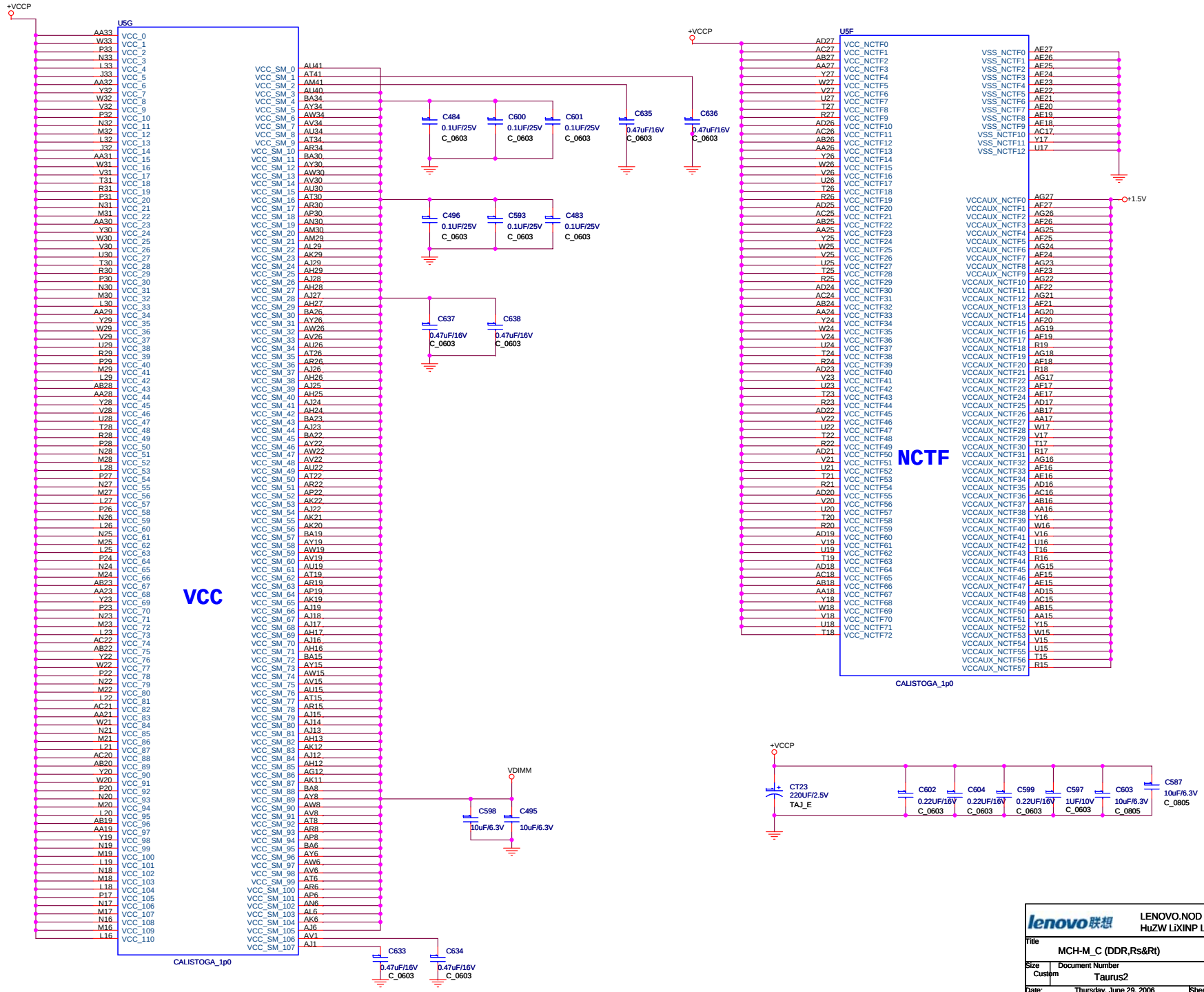

lenovo联想

LENOVO.NOD
HuZW LiXINP LiYJK LvXDA

Title: MCH-M_C (DDR,Rs&Rt)

Size: Custom | Document Number: Taurus2 | Rev: s0.1

Date: Thursday, June 29, 2006 | Sheet 10 of 40

"PROPERTY NOTE: this document contains information confidential and property to LENOVO PND and shall not be reproduced or transferred to other documents or disclosed to others or used for any purpose other than that for which it was obtained without the expressed written consent of LENOVO PND."

WWW.AliSaler.Com

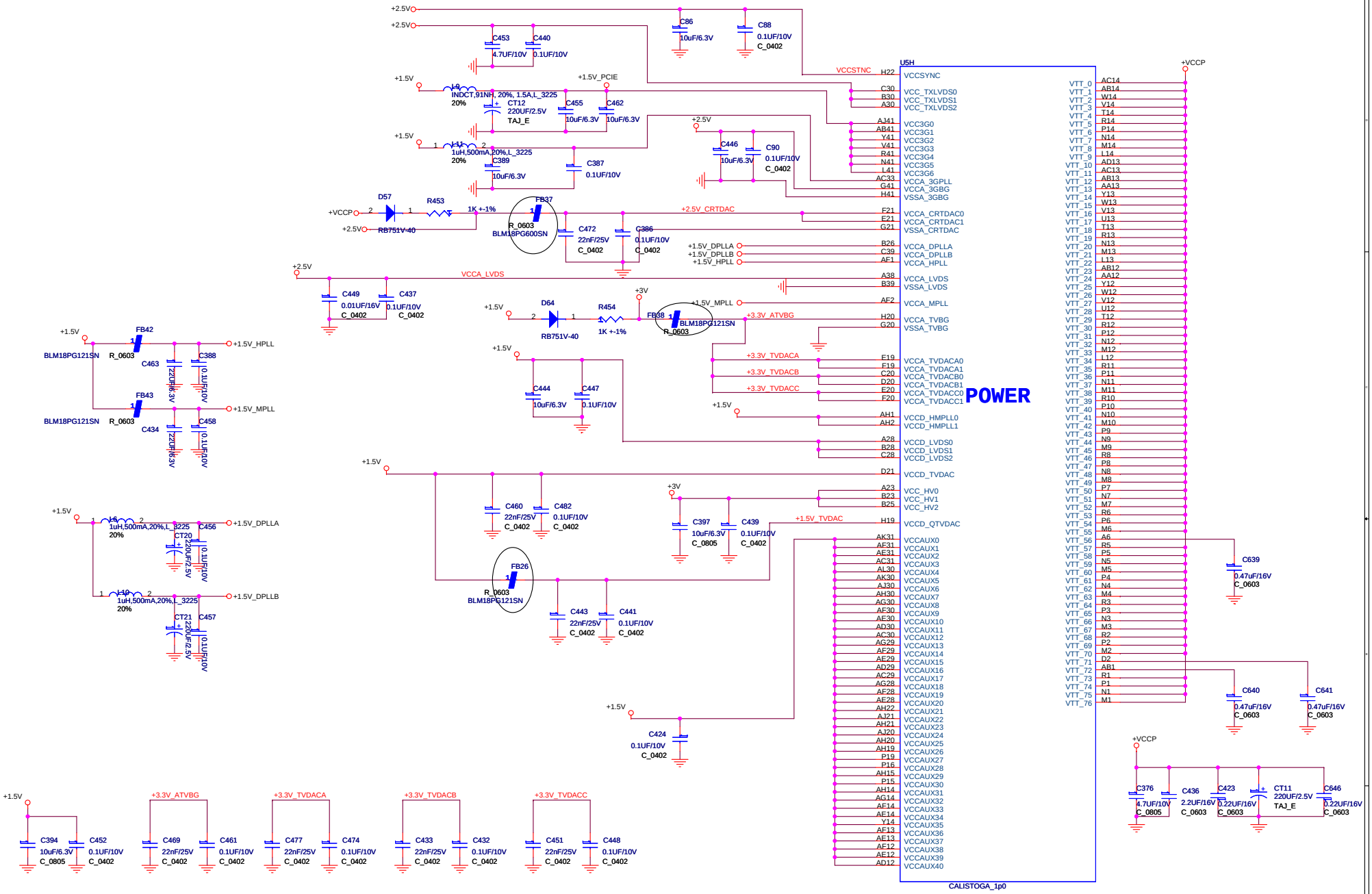

lenovo联想

LENOVO.NOD
HuZW LiXINP LiYJK LvXDA

Title: MCH-M_C (DDR,Rs&Rt)

Size: Custom | Document Number: Taurus2 | Rev: s0.1

Date: Thursday, June 29, 2006 | Sheet 11 of 40

"PROPERTY NOTE: this document contains information confidential and property to LENOVO PND and shall not be reproduced or transferred to other documents or disclosed to others or used for any purpose other than that for which it was obtained without the expressed written consent of LENOVO PND."

WWW.AliSaler.Com

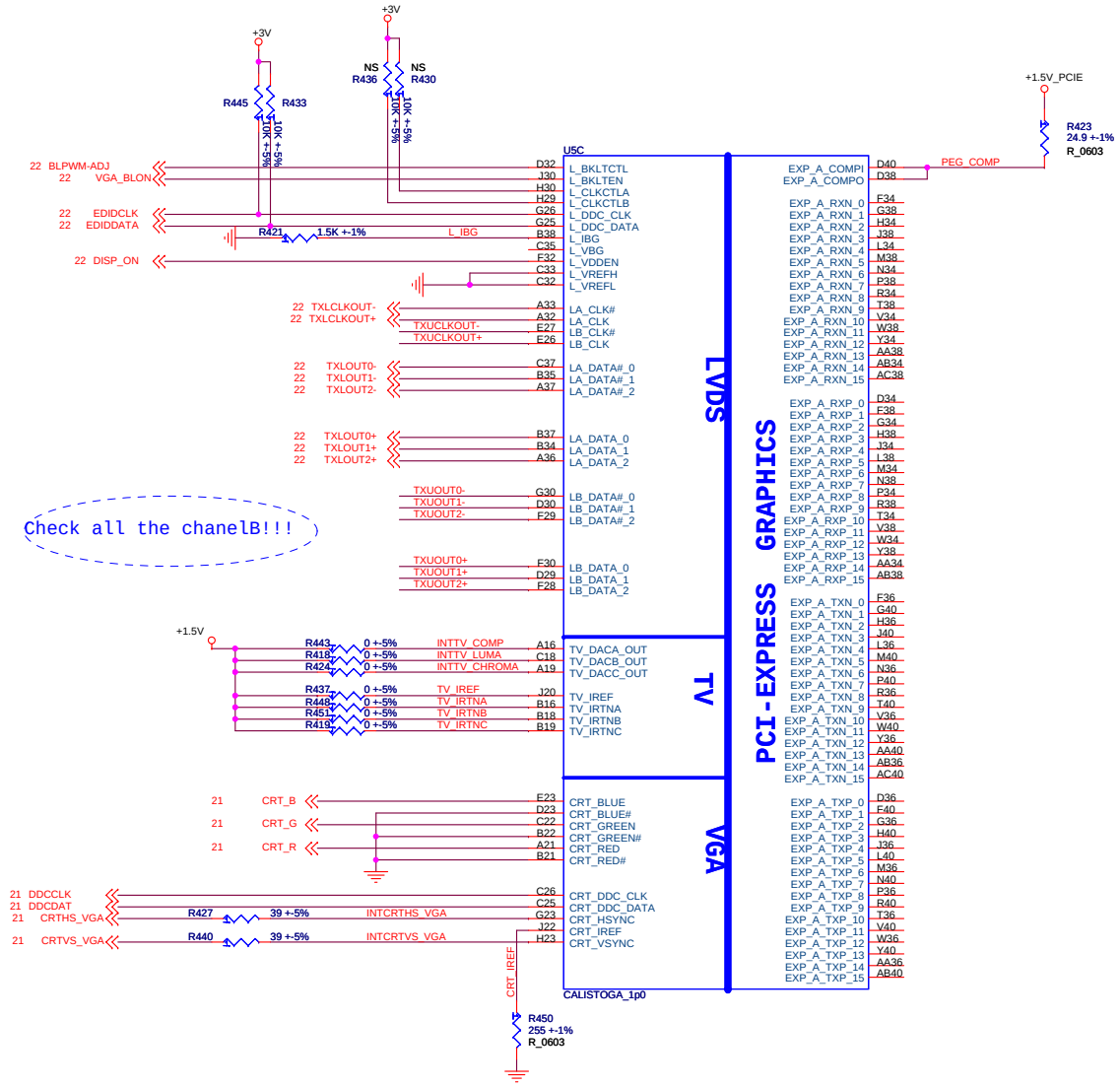

lenovo联想

LENOVO.NOD
HuZW LiXINP LiYJK LvXDA

Title: MCH-M_C (DDR,Rs&Rt)

Size: Custom | Document Number: Taurus2 | Rev: s0.1

Date: Thursday, June 29, 2006 | Sheet 12 of 40

"PROPERTY NOTE: this document contains information confidential and property to LENOVO PND and shall not be reproduced or transferred to other documents or disclosed to others or used for any purpose other than that for which it was obtained without the expressed written consent of LENOVO PND."

WWW.AliSaler.Com

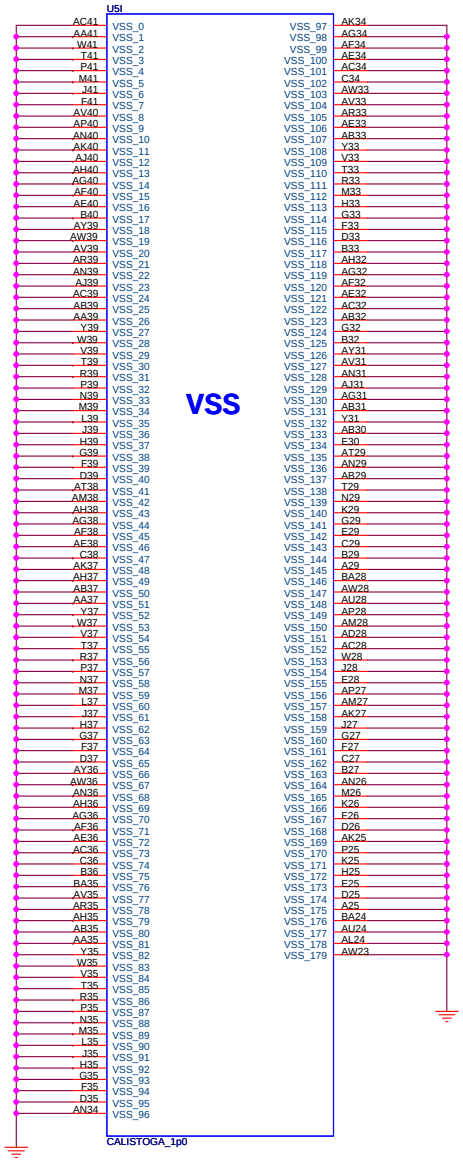

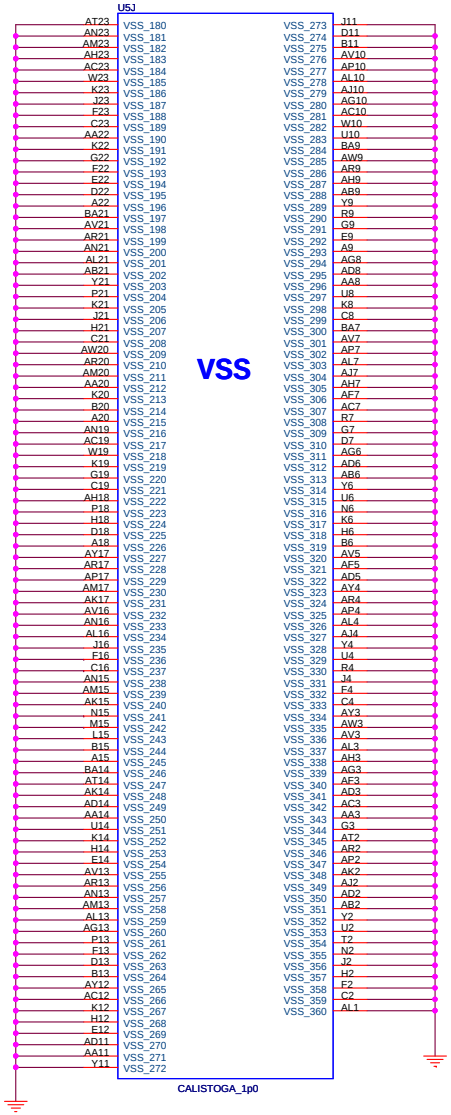

lenovo联想	LENOVO.NOD
Title	Calistoga(VSS)
Size: Custom	Document Number: Taurus2
Rev	V0.1
Date: Thursday, June 29, 2006	Sheet 13 of 40

"PROPERTY NOTE: this document contains information confidential and property to LENOVO PND and shall not be reproduced or transferred to other documents or disclosed to others or used for any purpose other than that for which it was obtained without the expressed written consent of LENOVO PND."

WWW.AliSaler.Com

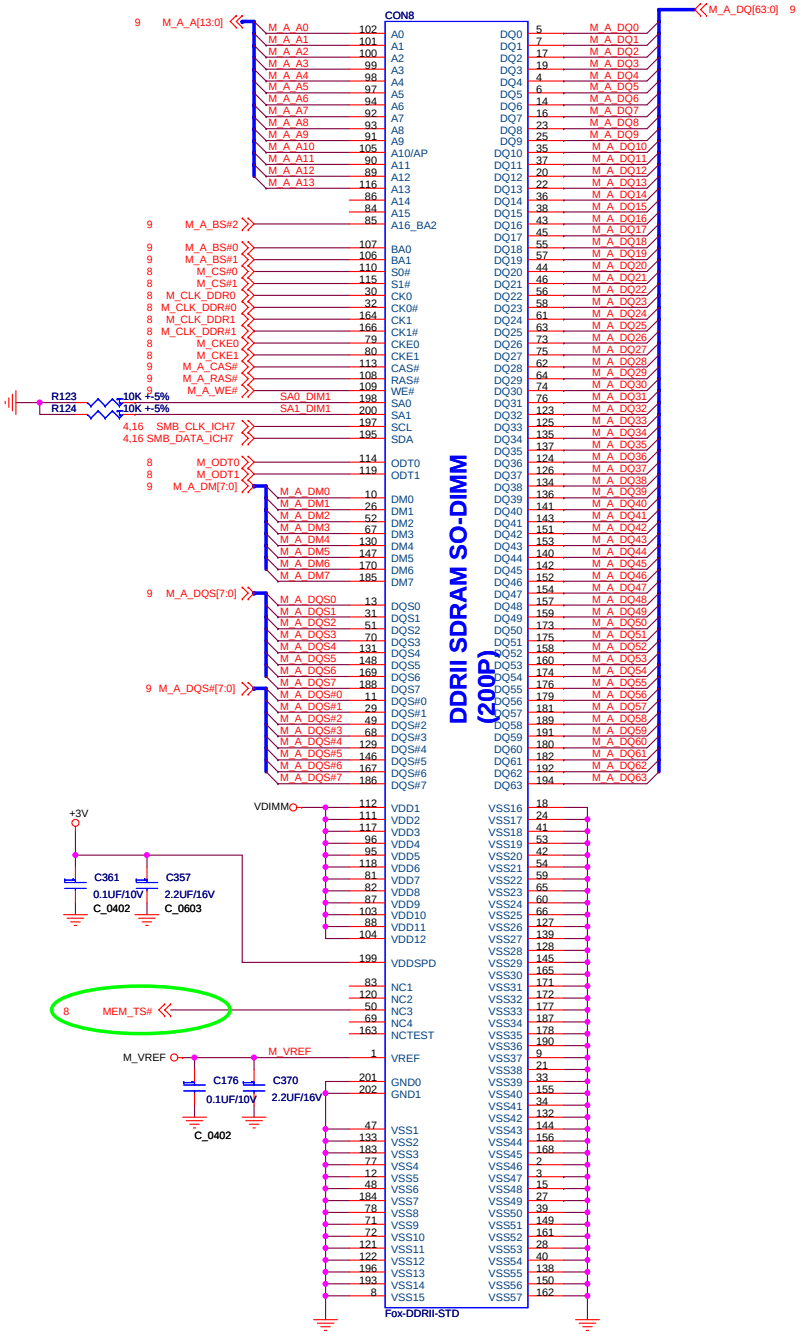

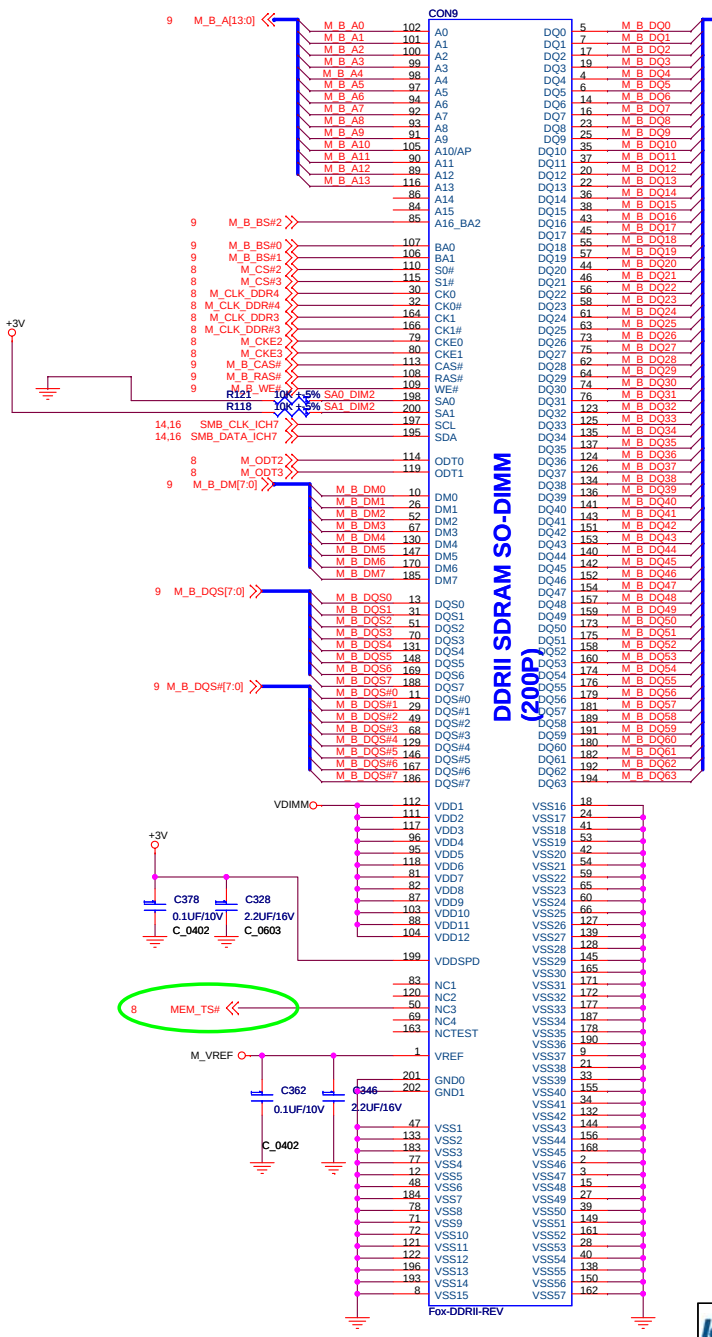

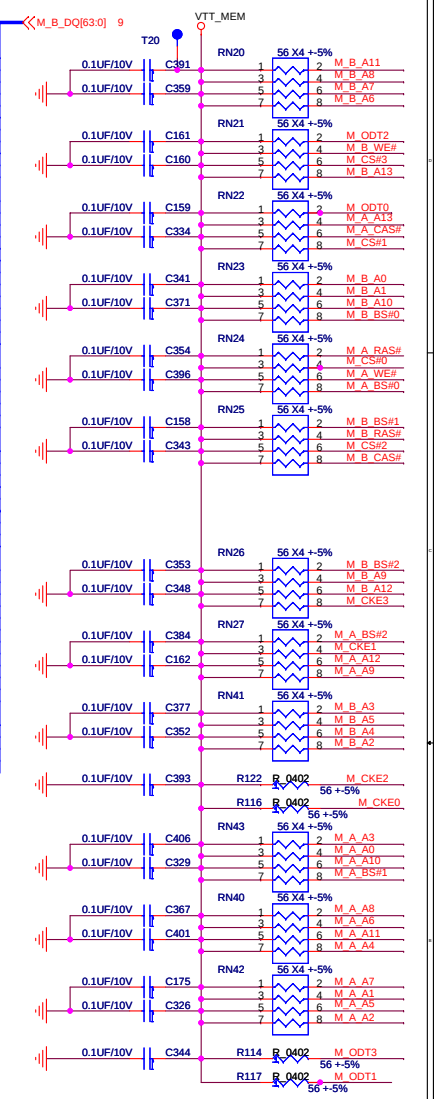

Layout Note:place these near dimm0

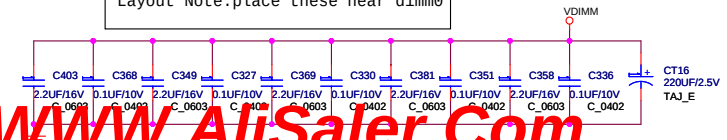

Layout Note:place these near dimm1

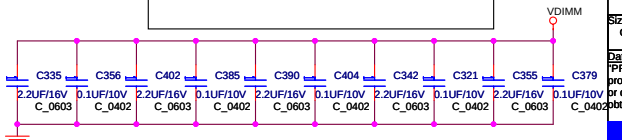

lenovo联想

LENOVO.NOD
HuZW LiXINP LiYJK LvXDA

Title: DDR SO-DIMM(200P)

Size: Custom | Document Number: Taurus2 | Rev: s0.1

Date: Thursday, June 29, 2006 | Sheet 14 of 40

"PROPERTY NOTE: this document contains information confidential and property to LENOVO PND and shall not be reproduced or transferred to other documents or disclosed to others or used for any purpose other than that for which it was obtained without the expressed written consent of LENOVO PND."

WWW.AliSaler.Com

Consider VCCRTC sources

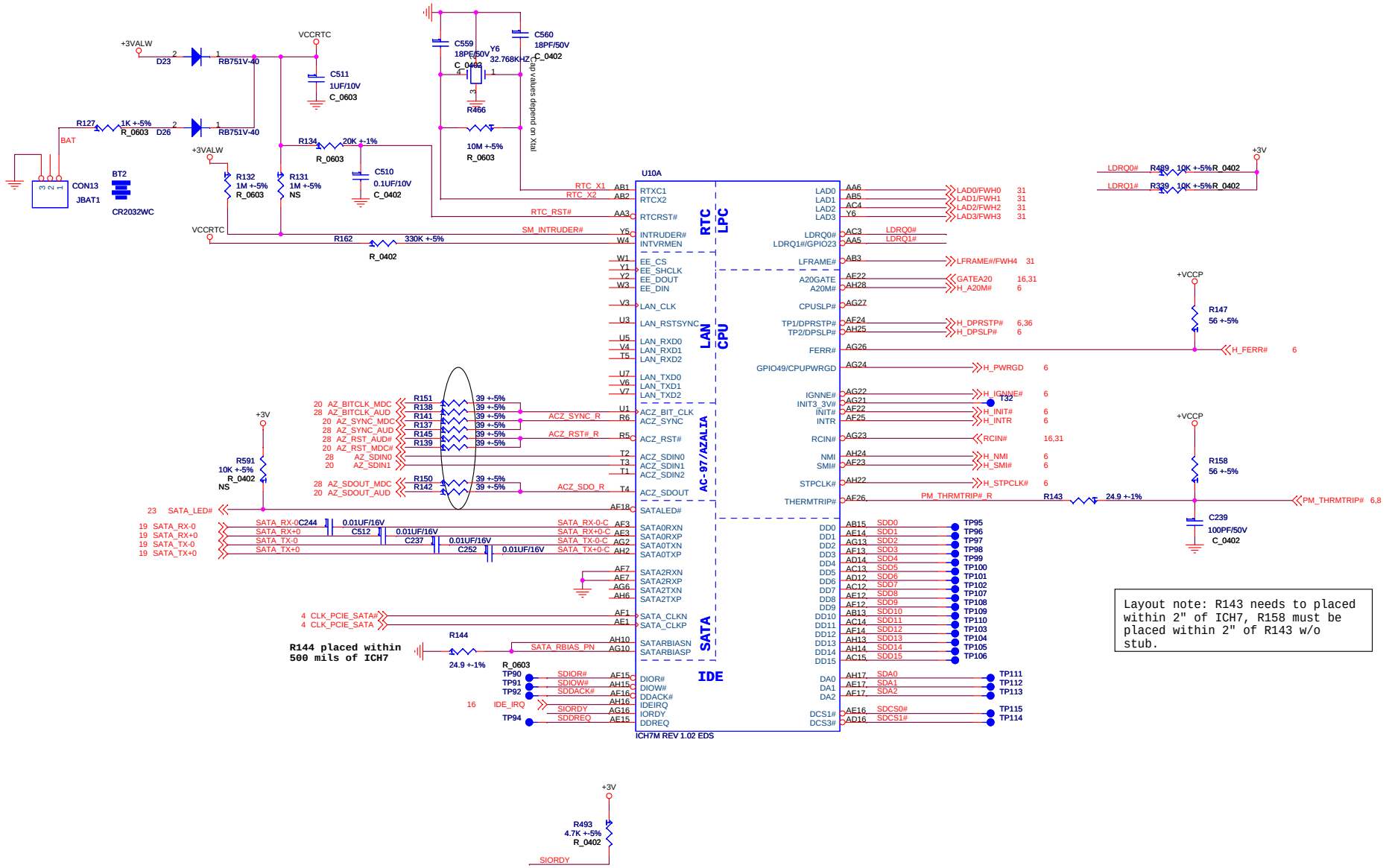

Layout note: R143 needs to placed within 2" of ICH7, R158 must be placed within 2" of R143 w/o stub.

lenovo联想 LENOVO.NOD

Title: ICH7-M(CPU/IDE/SATA)

Size: Custom | Document Number: Taurus2 | Rev V0.1

Date: Thursday, June 29, 2006 | Sheet 15 of 40

"PROPERTY NOTE: this document contains information confidential and property to LENOVO PND and shall not be reproduced or transferred to other documents or disclosed to others or used for any purpose other than that for which it was obtained without the expressed written consent of LENOVO PND."

WWW.AliSaler.Com

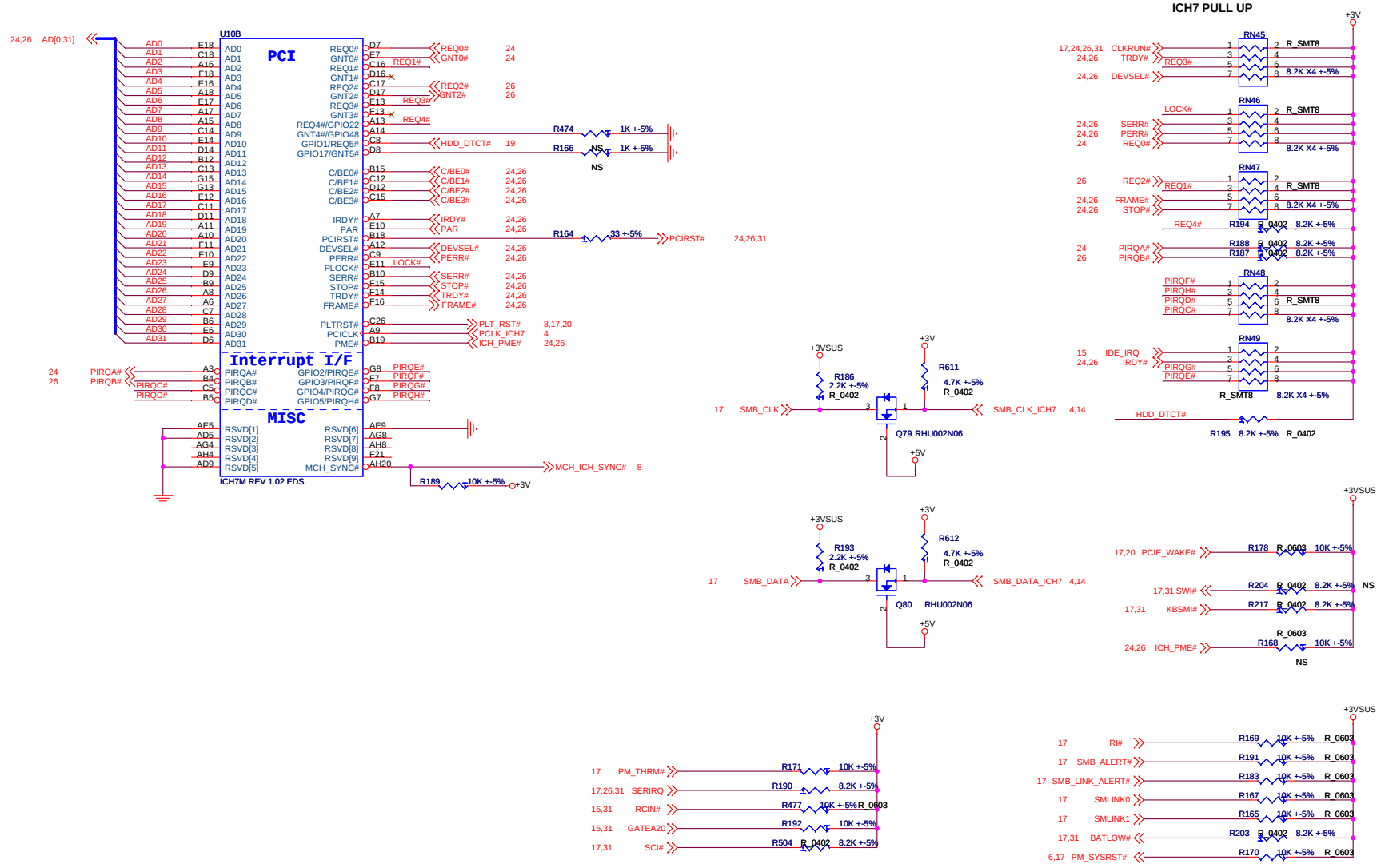

	GNT5#	GNT4#
LPC	H	H
PCI	H	L
SPI	L	H

PIRQA# : BCM5705
PIRQB# : OZ711EZ1TN

REQ0 : BCM4401
REQ1 : NU
REQ2 : OZ711EZ1TN
REQ3 : NU

lenovo联想 LENOVO.NOD

Title: ICH7-M(PCI)&PULL UP

Size: Custom | Document Number: Taurus2 | Rev V0.1

Date: Thursday, June 29, 2006 | Sheet 16 of 40

"PROPERTY NOTE: this document contains information confidential and property to LENOVO PND and shall not be reproduced or transferred to other documents or disclosed to others or used for any purpose other than that for which it was obtained without the expressed written consent of LENOVO PND."

WWW.AliSaler.Com

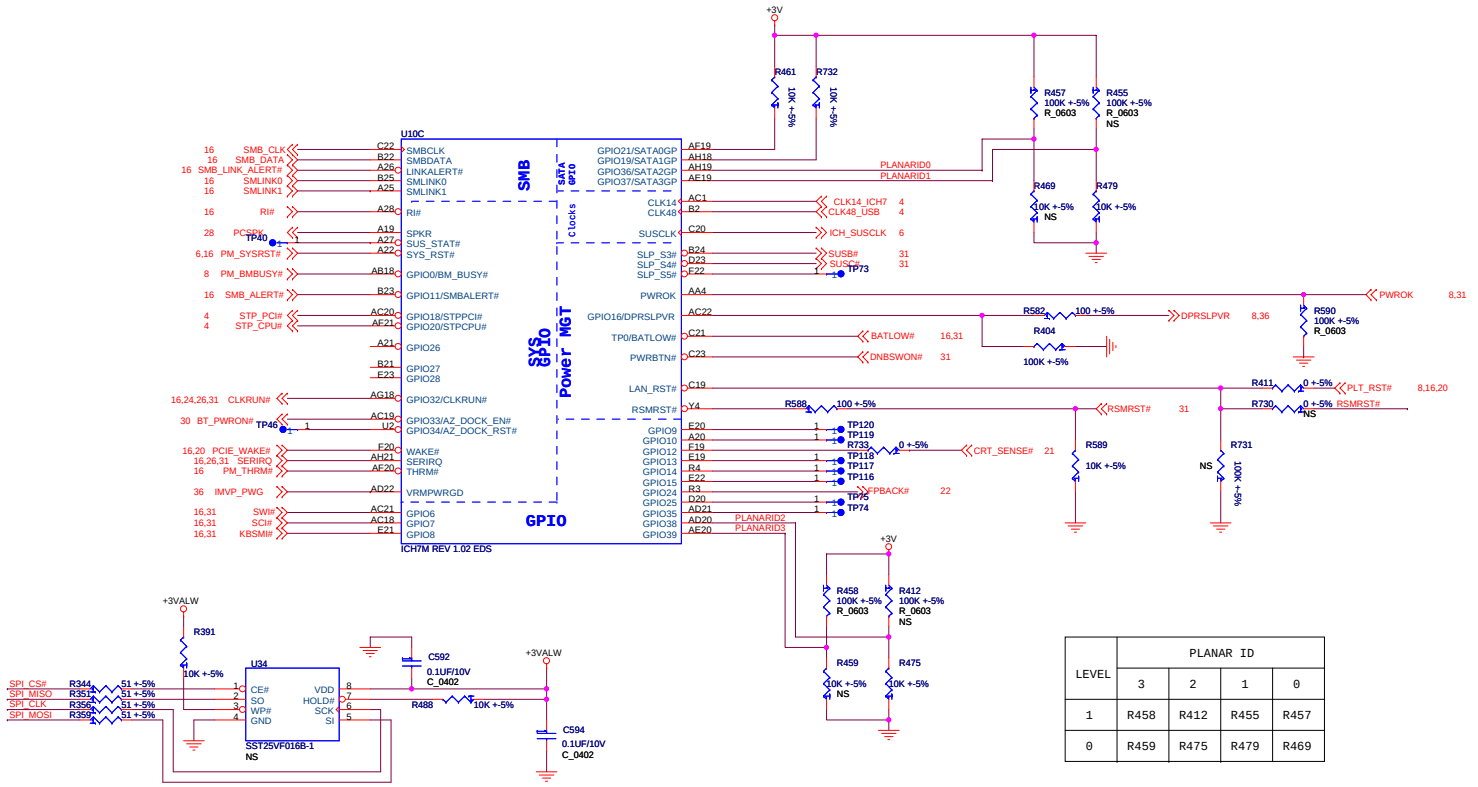

LEVEL	PLANAR ID			
	3	2	1	0
1	R458	R412	R455	R457
0	R459	R475	R479	R469

PLACE LESS THAN 2 INCH FROM THE ICH IF USING SHARED ARCHITECTURE.

NOTE:
RX--TX
TX--RX

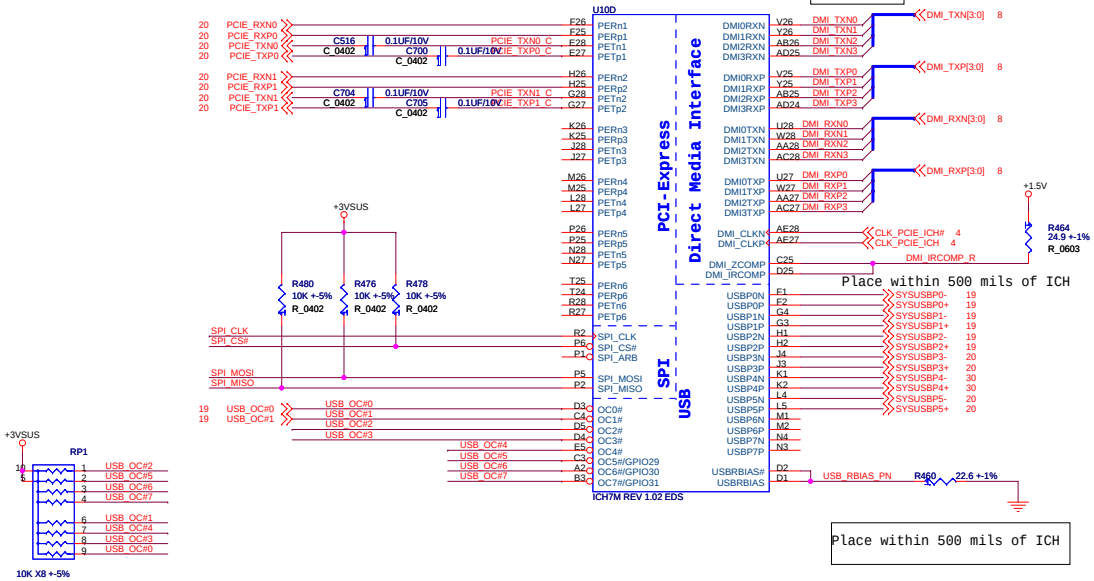

lenovo联想 LENOVO.NOD

Title: ICH7-M(GPIO/PM/USB/SPI)

Size: Custom | Document Number: Taurus2 | Rev V0.1

Date: Thursday, June 29, 2006 | Sheet 17 of 40

"PROPERTY NOTE: this document contains information confidential and property to LENOVO PND and shall not be reproduced or transferred to other documents or disclosed to others or used for any purpose other than that for which it was obtained without the expressed written consent of LENOVO PND."

WWW.AliSaler.Com

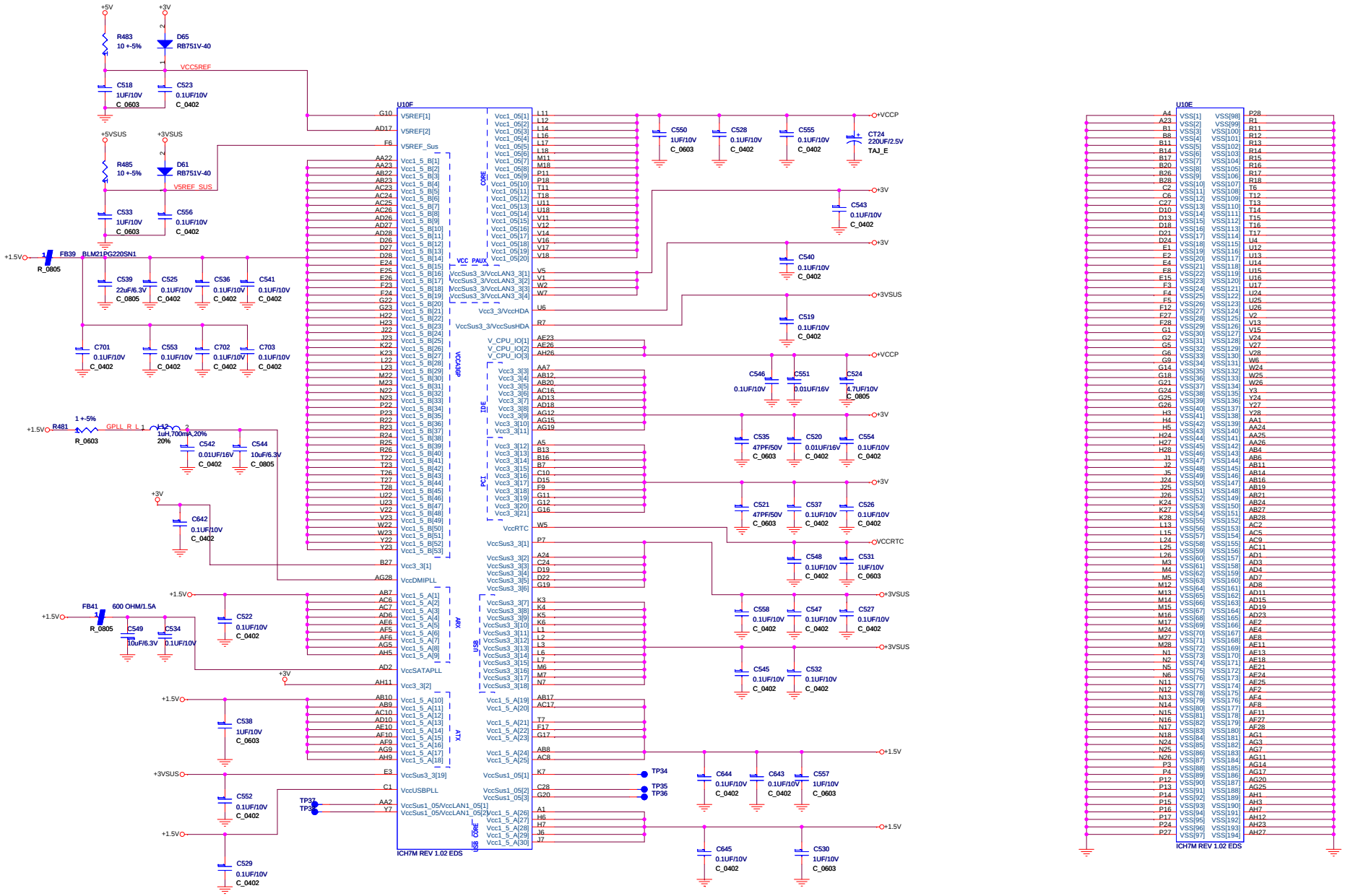

lenovo联想

LENOVO.NOD
HuZW LiXINP LiYJK LvXDA

Title: ICH7-M(POWER/GND)

Size	Document Number	Rev
C	Taurus2	V0.1

Date: Thursday, June 29, 2006 Sheet 18 of 40

"PROPERTY NOTE: this document contains information confidential and property to LENOVO PND and shall not be reproduced or transferred to other documents or disclosed to others or used for any purpose other than that for which it was obtained without the expressed written consent of LENOVO PND."

WWW.AliSaler.Com

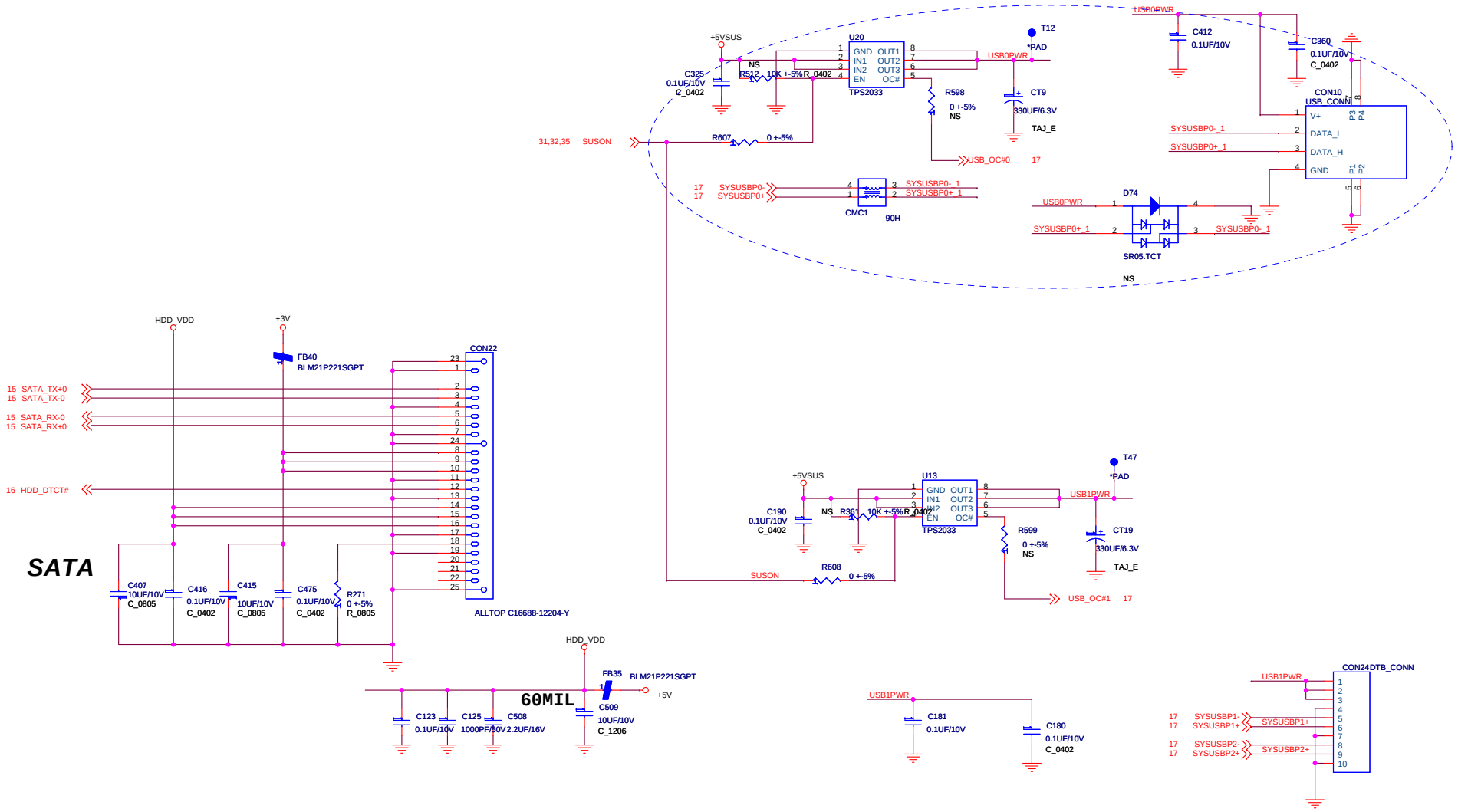

For external ODD,the USB Power need larger than 1A

lenovo联想	LENOVO.NOD HuZW LiXINP LiYJK LvXDA	
Title	USB HDD	
Size Custom	Document Number Taurus2	Rev s0.1
Date: Thursday, June 29, 2006	Sheet 19 of 40	

"PROPERTY NOTE: this document contains information confidential and property to LENOVO PND and shall not be reproduced or transferred to other documents or disclosed to others or used for any purpose other than that for which it was obtained without the expressed written consent of LENOVO PND."

WWW.AliSaler.Com

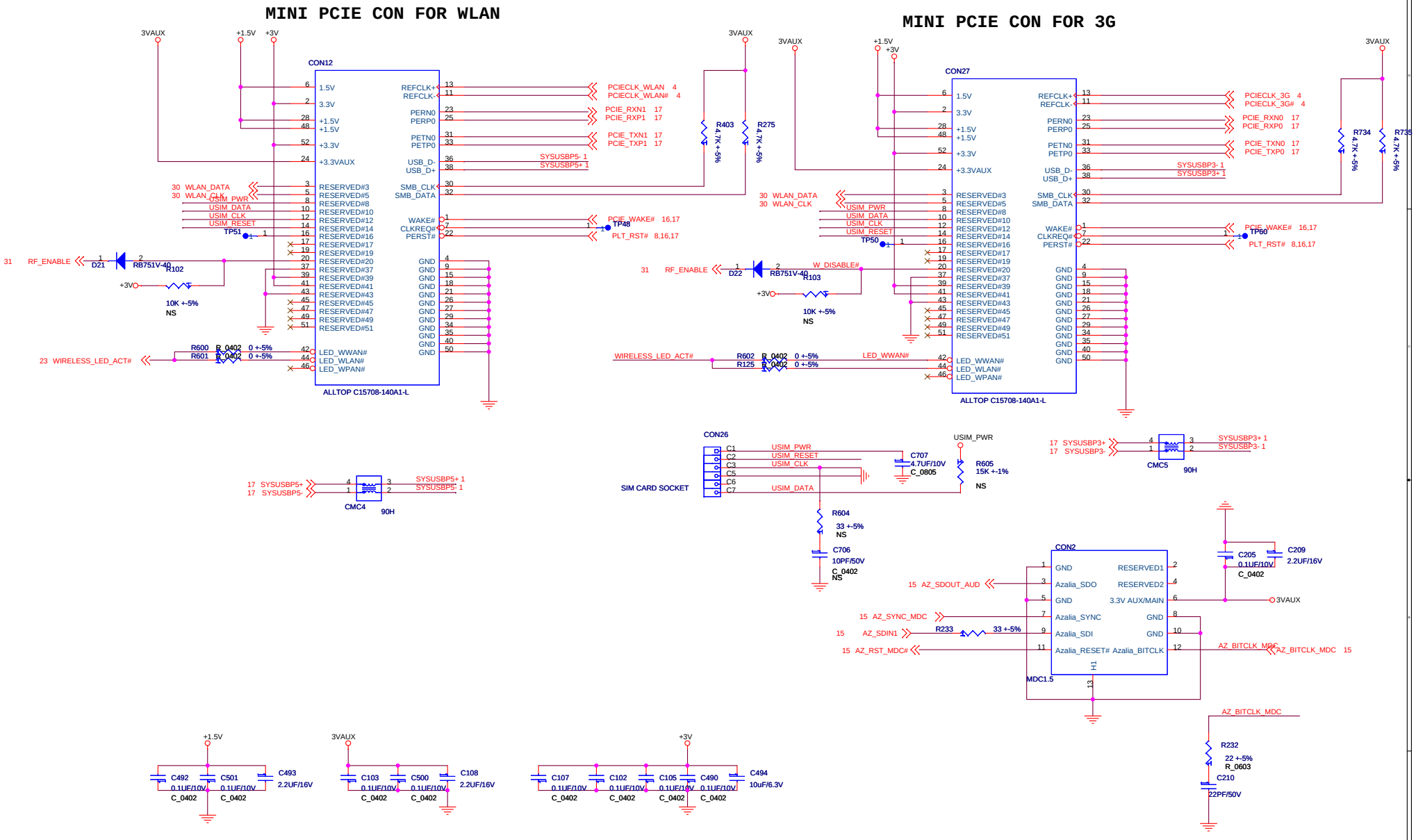

lenovo联想

LENOVO.NOD
HuZW LiXINP LiYJK LvXDA

Title: MINI-PCIE, WWAN ,MDC

Size: Custom | Document Number: Taurus2 | Rev: s0.1

Date: Thursday, June 29, 2006 | Sheet 20 of 40

"PROPERTY NOTE: this document contains information confidential and property to LENOVO PND and shall not be reproduced or transferred to other documents or disclosed to others or used for any purpose other than that for which it was obtained without the expressed written consent of LENOVO PND."

WWW.AliSaler.Com

CRT PORT

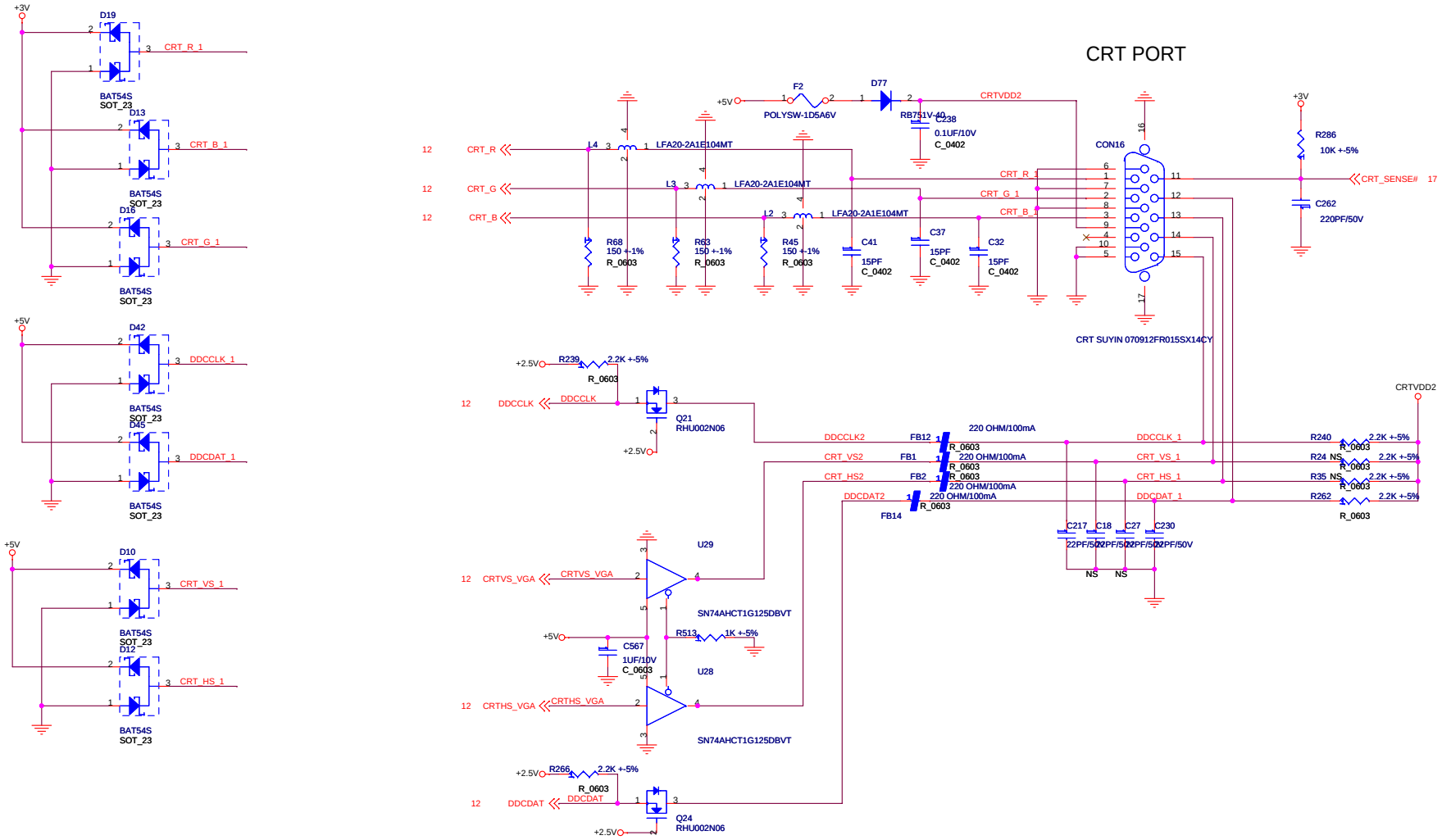

lenovo联想	LENOVO.NOD HuZW LiXINP LiYJK LvXDA
Title	CRT
Size: Custom	Document Number: Taurus2 — Rev s0.1
Date: Thursday, June 29, 2006	Sheet 21 of 40

"PROPERTY NOTE: this document contains information confidential and property to LENOVO PND and shall not be reproduced or transferred to other documents or disclosed to others or used for any purpose other than that for which it was obtained without the expressed written consent of LENOVO PND."

WWW.AliSaler.Com

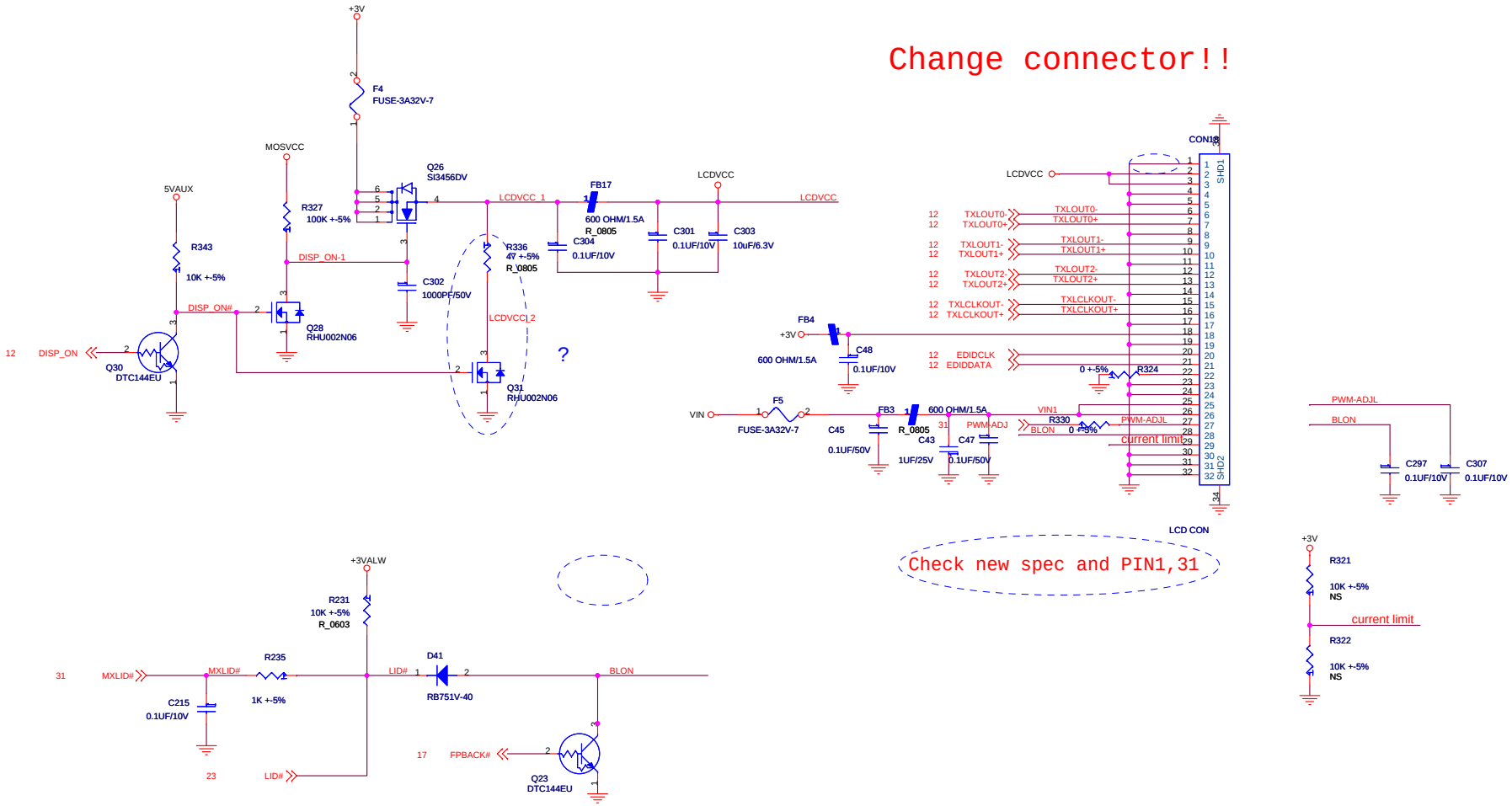

Tmative 1.2V 5V voltage transation circuitry

WWW.AliSaler.Com

lenovo联想

LENOVO.NOD
HuZW LiXINP LiYJK LvXDA

Title: LCD CONN

Size: Custom | Document Number: Taurus2 | Rev: s0.1

Date: Thursday, June 29, 2006 | Sheet 22 of 40

"PROPERTY NOTE: this document contains information confidential and property to LENOVO PND and shall not be reproduced or transferred to other documents or disclosed to others or used for any purpose other than that for which it was obtained without the expressed written consent of LENOVO PND."

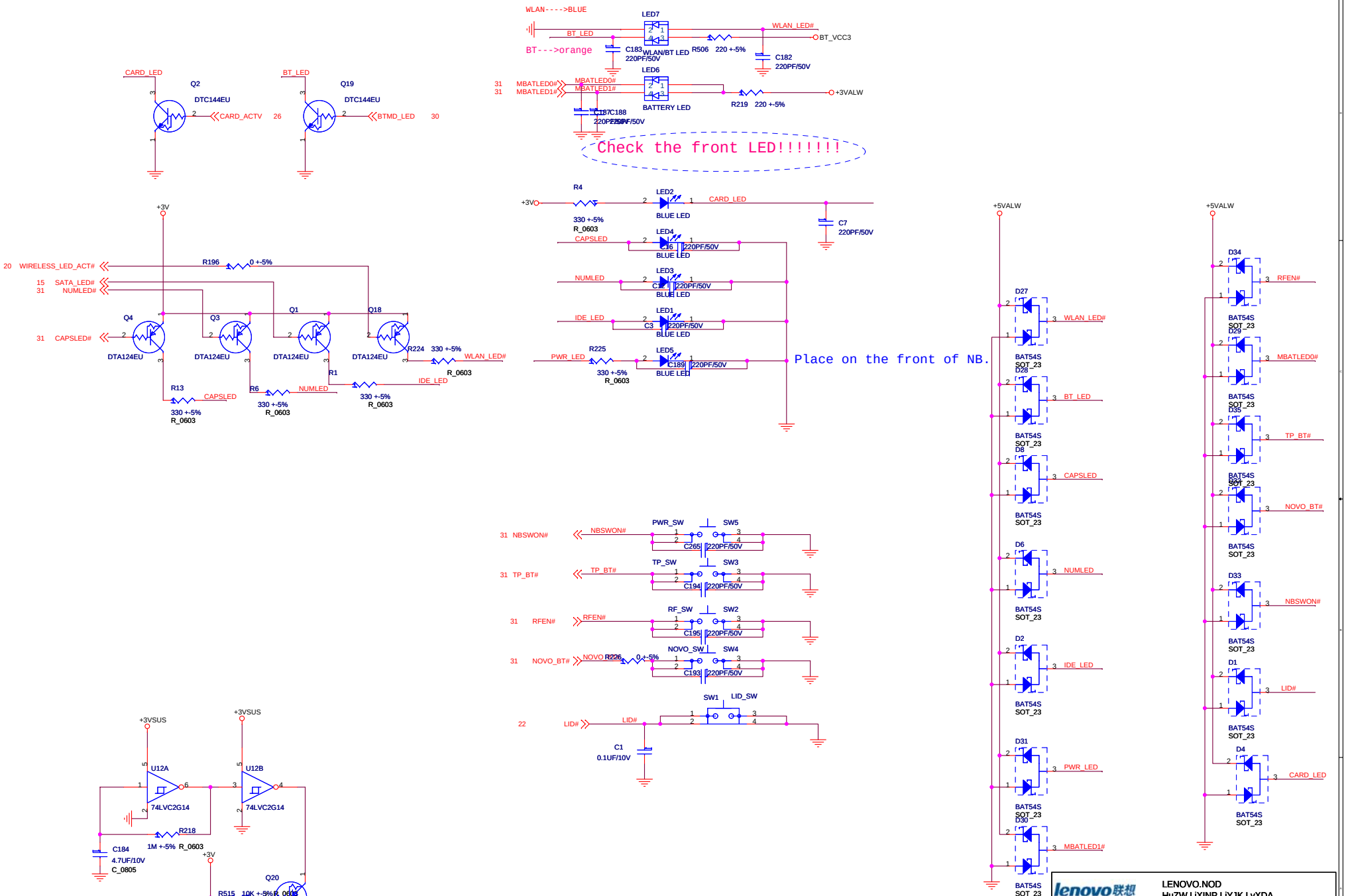
WLAN---->BLUE
BT---->orange
LED7
WLAN/BT LED
LED6
BATTERY LED
Check the front LED!!!!!!!
Place on the front of NB.
Q2
DTC144EU
Q19
DTC144EU
Q4
Q3
Q1
Q18
DTA124EU
Q17
Q20
U12A
U12B
74LVC2G14
SW1
SW2
SW3
SW4
SW5
D27
D28
D8
D6
D2
D31
D30
D34
D29
D35
D36
D33
D1
D4
BAT54S
SOT_23
+3V
+3VSUS
+5VALW
+3VALW
BT_VCC3
WLAN_LED#
BT_LED
CARD_LED
CARD_ACTV
BTMD_LED
MBATLED0#
MBATLED1#
NBSWON#
TP_BT#
RFEN#
NOVO_BT#
LID#
PWR_LED#
NUMLED#
SATA_LED#
WIRELESS_LED_ACT#
CAPSLED#
IDE_LED
PWR_LED
NUMLED
CAPSLED
R4
R196
R224
R225
R506
R219
R218
R515
R226
R13
R6
R1
C7
C1
C182
C183
C184
C187
C188
C189
C193
C194
C195
C265
C3
C16
C17
C18
C19
C20
C21
C22
C23
C24
C25
C26
C27
C28
C29
C30
C31
C32
C33
C34
C35
C36
C37
C38
C39
C40
C41
C42
C43
C44
C45
C46
C47
C48
C49
C50
C51
C52
C53
C54
C55

Component Stuffing Requirements

	4401	5788
R401	NS	S
R402	S	NS
R384	NS	S
R388	S	NS
FB21 C337 C323	NS	S
R84	1.27K 1%	1.24K 1%
Q10 Q34	NS	S
R83 R82	NS	S
R305 R306	NS	S
R307 R308	NS	S
C277 C274	NS	S
U4	S	NS
U17	NS	S

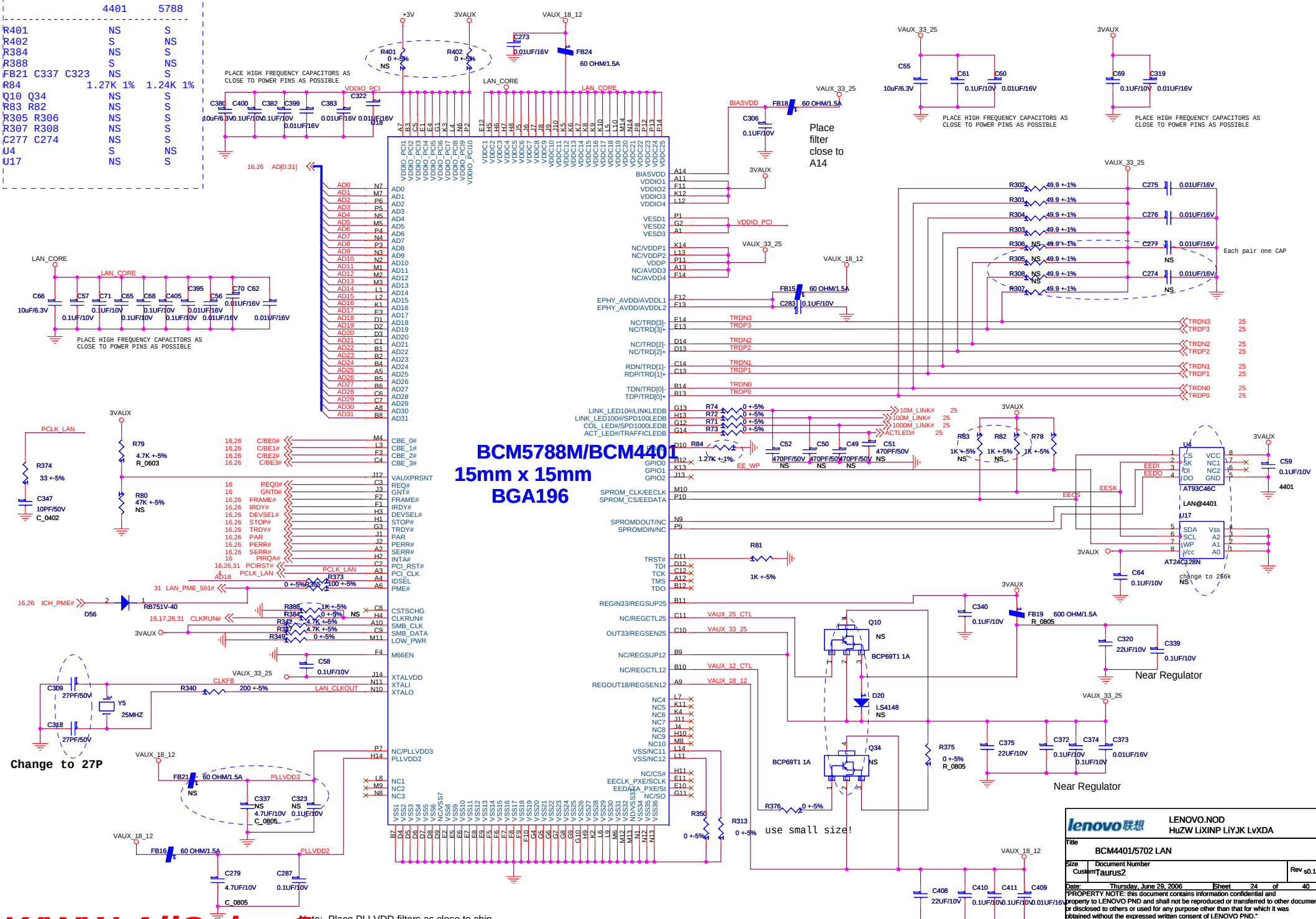

WWW.AliSaler.Com

lenovo联想 LENOVO.NOD
HuZW LiXINP LiYJK LvXDA

Title: BCM4401/5702 LAN

Size: Custom | Document Number: Taurus2 | Rev: s0.1

Date: Thursday, June 29, 2006 | Sheet 24 of 40

"PROPERTY NOTE: this document contains information confidential and property to LENOVO PND and shall not be reproduced or transferred to other documents or disclosed to others or used for any purpose other than that for which it was obtained without the expressed written consent of LENOVO PND."

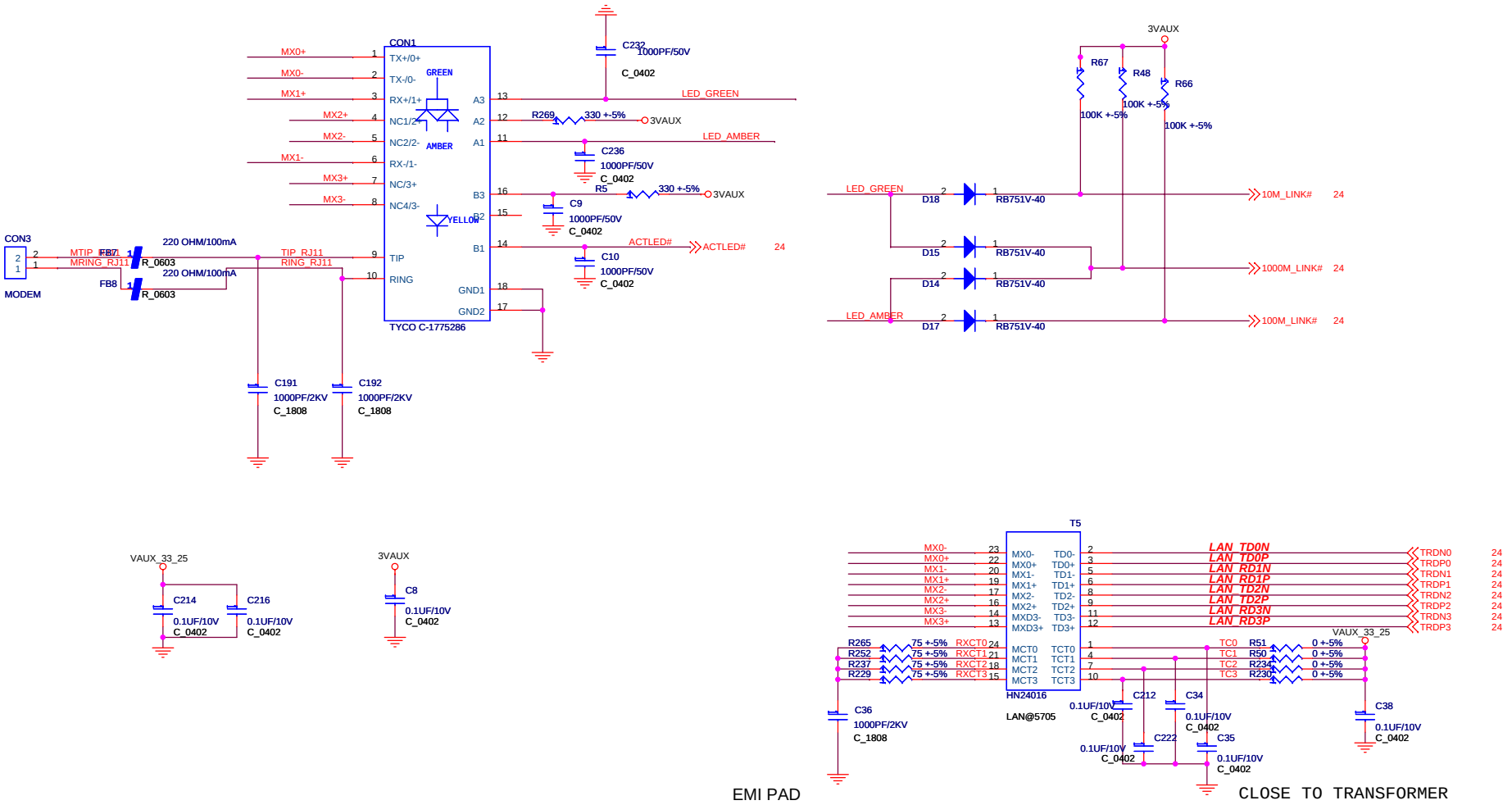

lenovo联想	LENOVO.NOD HuZW LiXINP LiYJK LvXDA	
Title	RJ45 RJ11	
Size Custom	Document Number Taurus2	Rev s0.1
Date: Thursday, June 29, 2006	Sheet 25 of 40	

"PROPERTY NOTE: this document contains information confidential and property to LENOVO PND and shall not be reproduced or transferred to other documents or disclosed to others or used for any purpose other than that for which it was obtained without the expressed written consent of LENOVO PND."

WWW.AliSaler.Com

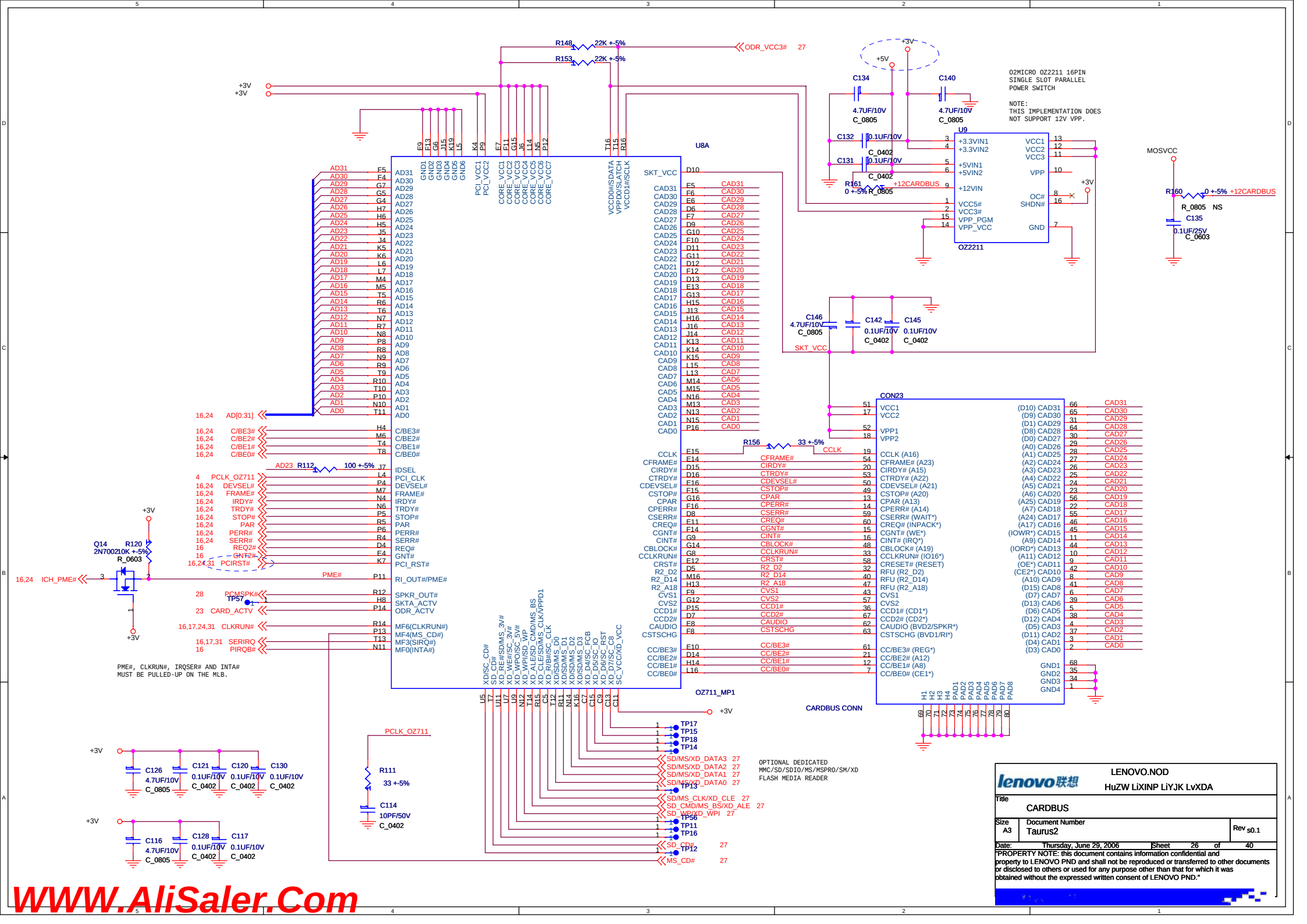

LENOVO.NOD

HuZW LiXINP LiYJK LvXDA

Title: CARDBUS

Size: A3 | Document Number: Taurus2 | Rev: s0.1

Date: Thursday, June 29, 2006 | Sheet 26 of 40

"PROPERTY NOTE: this document contains information confidential and property to LENOVO PND and shall not be reproduced or transferred to other documents or disclosed to others or used for any purpose other than that for which it was obtained without the expressed written consent of LENOVO PND."

WWW.AliSaler.Com

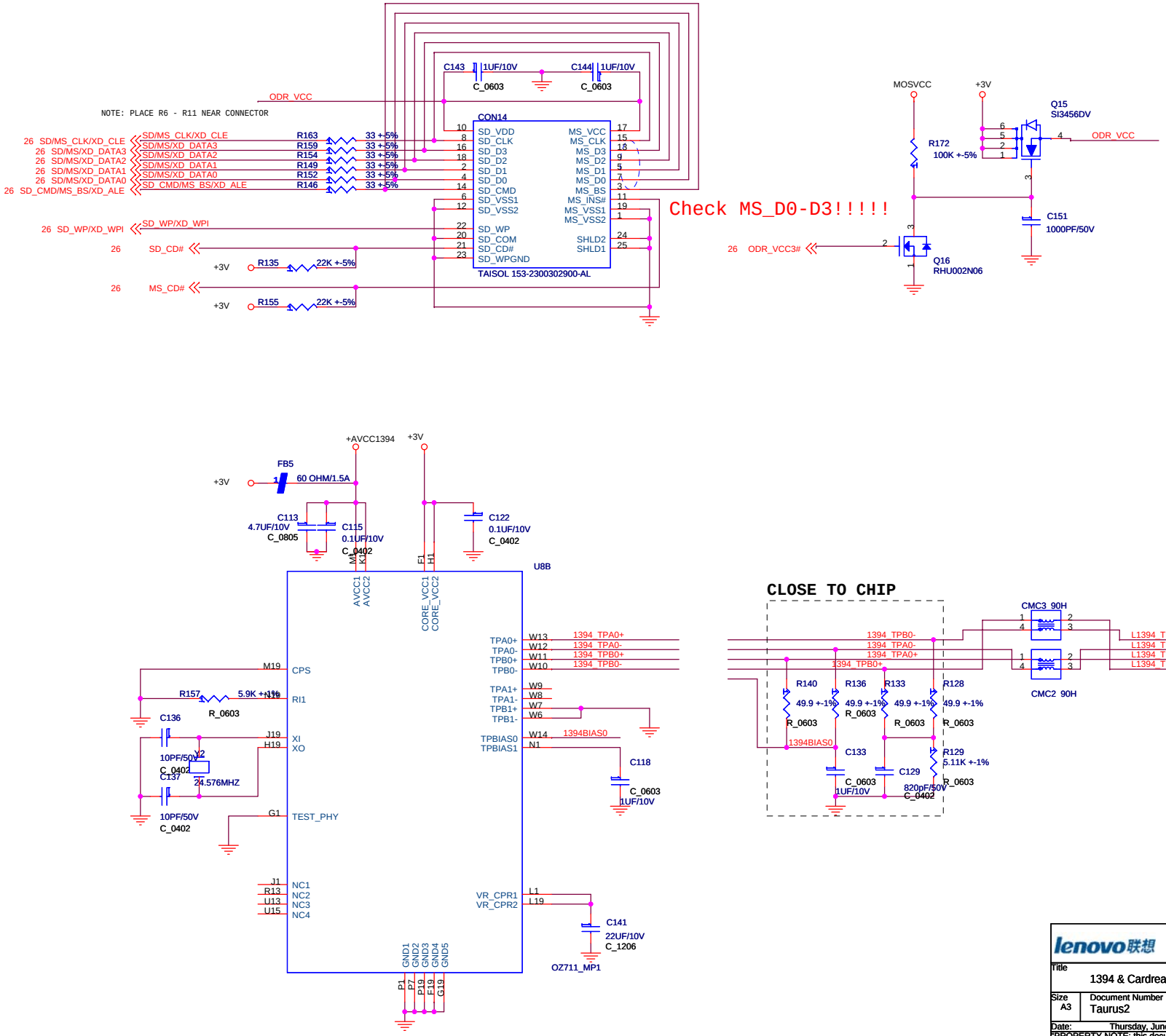

lenovo联想

LENOVO.NOD
HuZW LiXINP LiYJK LvXDA

Title: 1394 & Cardreader(Connector)

Size	Document Number	Rev
A3	Taurus2	s0.1

Date: Thursday, June 29, 2006 Sheet 27 of 40

"PROPERTY NOTE: this document contains information confidential and property to LENOVO PND and shall not be reproduced or transferred to other documents or disclosed to others or used for any purpose other than that for which it was obtained without the expressed written consent of LENOVO PND."

WWW.AliSaler.Com

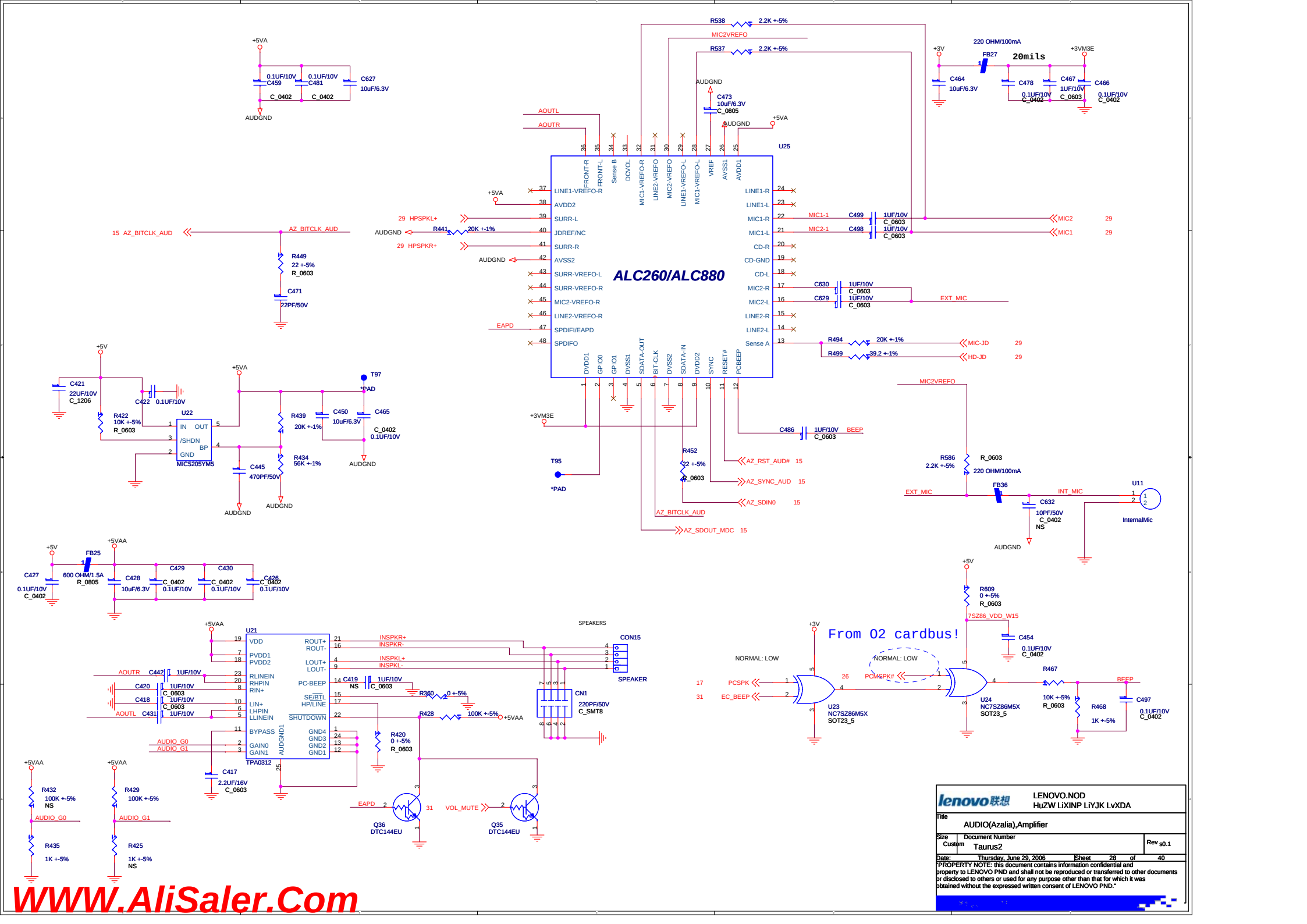

WWW.AliSaler.Com

lenovo联想

LENOVO.NOD
HuZW LiXINP LiYJK LvXDA

Title: AUDIO(Azalia),Amplifier

Size: Custom | Document Number: Taurus2 | Rev: s0.1

Date: Thursday, June 29, 2006 | Sheet 28 of 40

"PROPERTY NOTE: this document contains information confidential and property to LENOVO PND and shall not be reproduced or transferred to other documents or disclosed to others or used for any purpose other than that for which it was obtained without the expressed written consent of LENOVO PND."

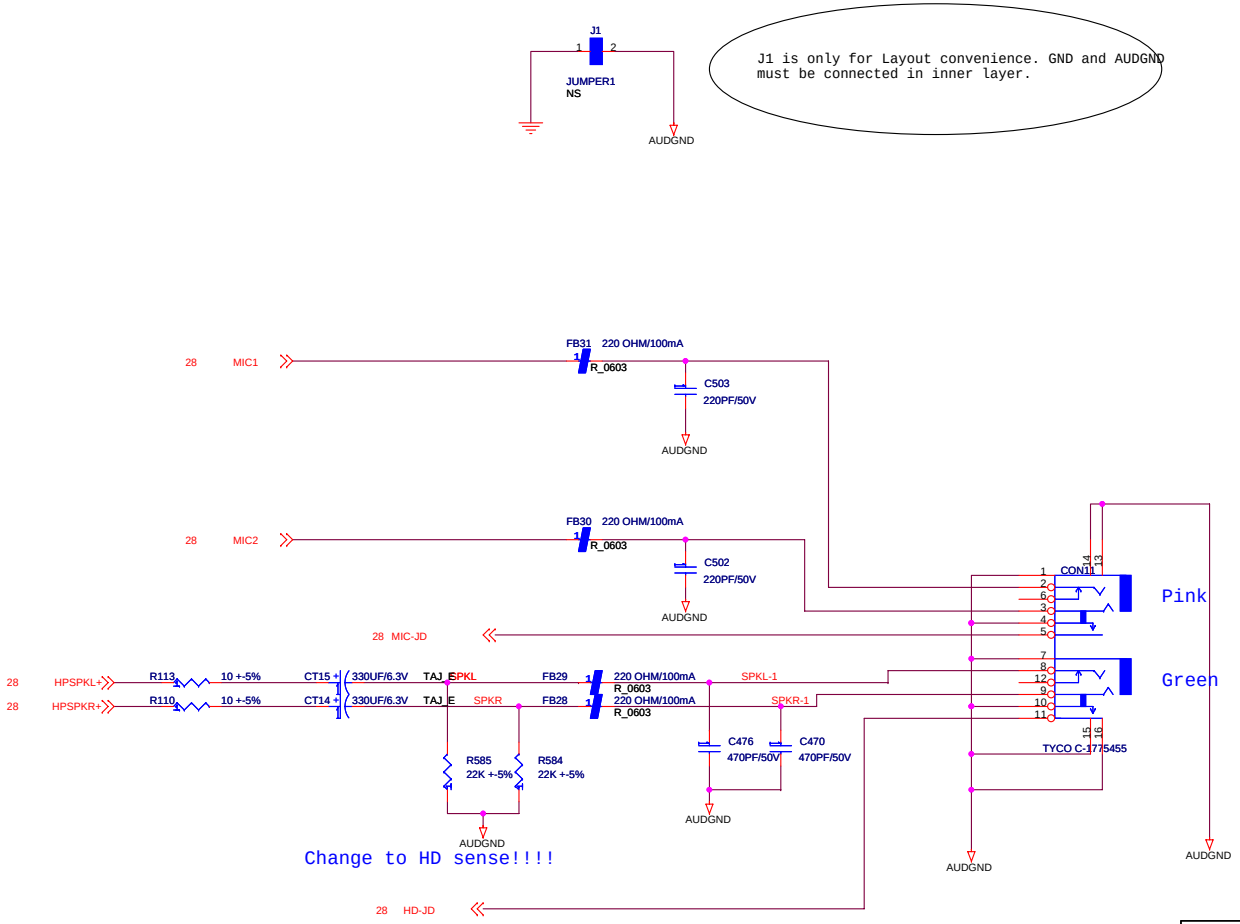

Consider to reserve PLUG signal in AC 97 platform

lenovo联想

LENOVO.NOD
HuZW LiXINP LiYJK LvXDA

Title: AUDIO JACK

Size: Custom | Document Number: Taurus2 | Rev: s0.1

Date: Thursday, June 29, 2006 | Sheet 29 of 40

"PROPERTY NOTE: this document contains information confidential and property to LENOVO PND and shall not be reproduced or transferred to other documents or disclosed to others or used for any purpose other than that for which it was obtained without the expressed written consent of LENOVO PND."

WWW.AliSaler.Com

Check Keyboard matrix

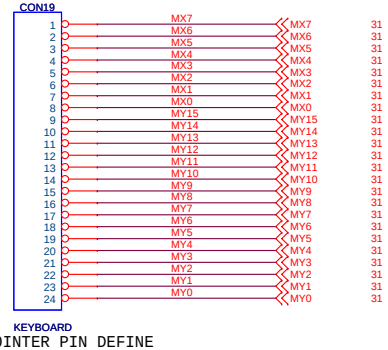

NEED CHECK STICK POINTER PIN DEFINE

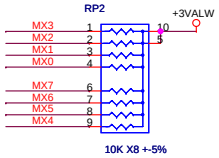

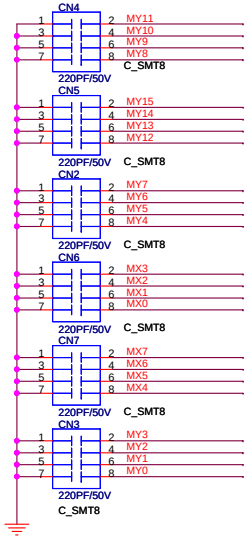

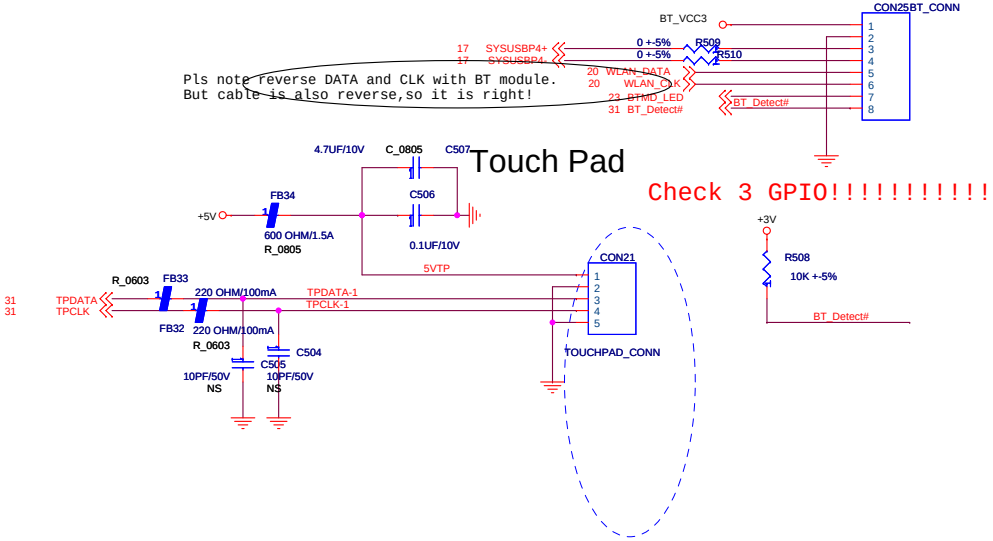

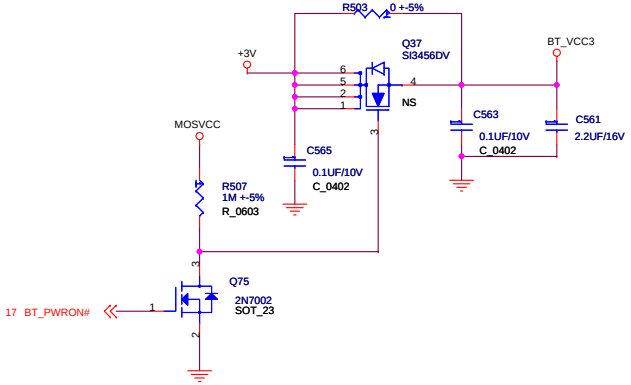

lenovo联想	LENOVO.NOD HuZW LiXINP LiYJK LvXDA
Title	KeyBoard TP BT
Size Custom	Document Number Taurus2
Rev	s0.1
Date: Thursday, June 29, 2006	Sheet 30 of 40

"PROPERTY NOTE: this document contains information confidential and property to LENOVO PND and shall not be reproduced or transferred to other documents or disclosed to others or used for any purpose other than that for which it was obtained without the expressed written consent of LENOVO PND."

WWW.AliSaler.Com

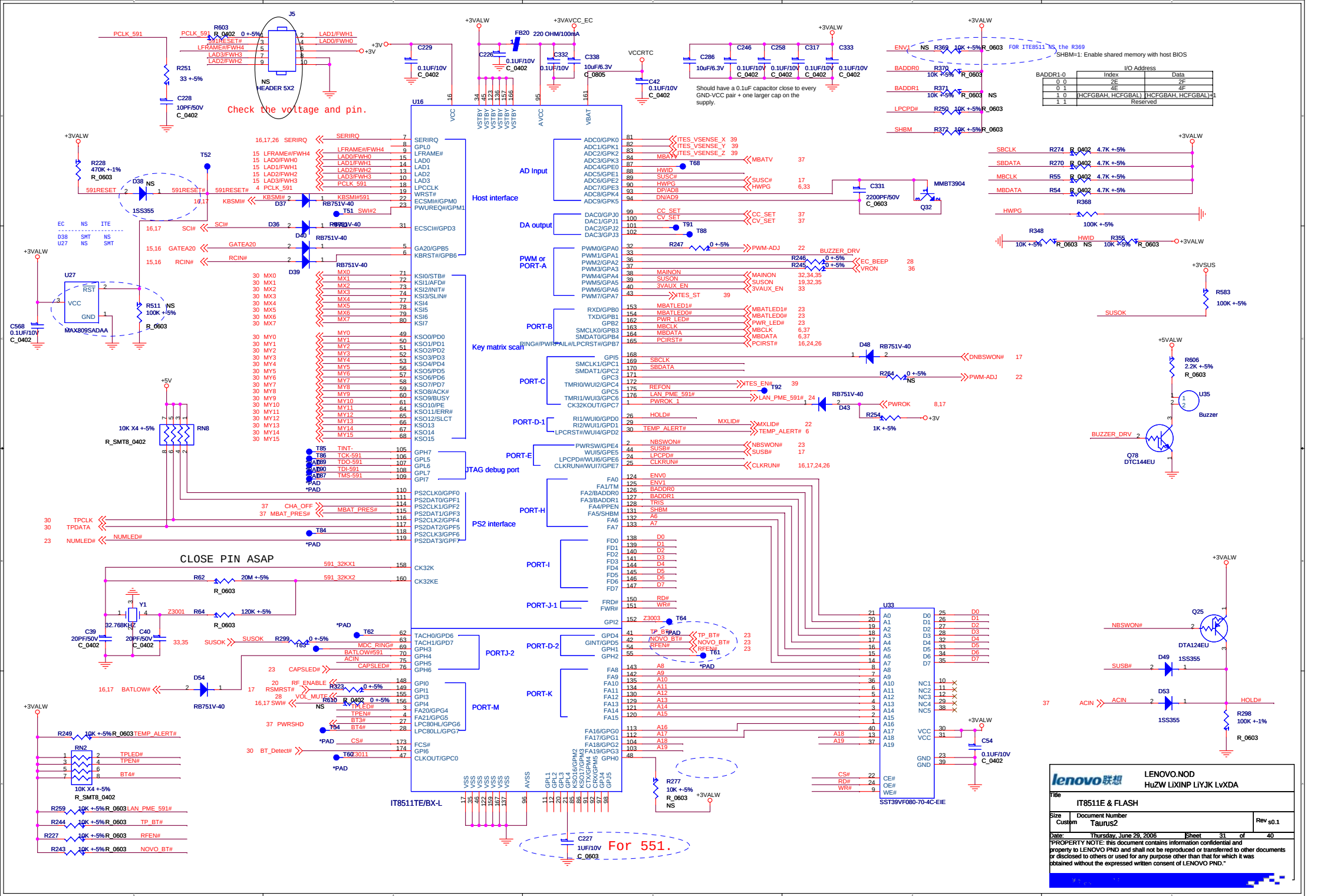

WWW.AliSaler.Com

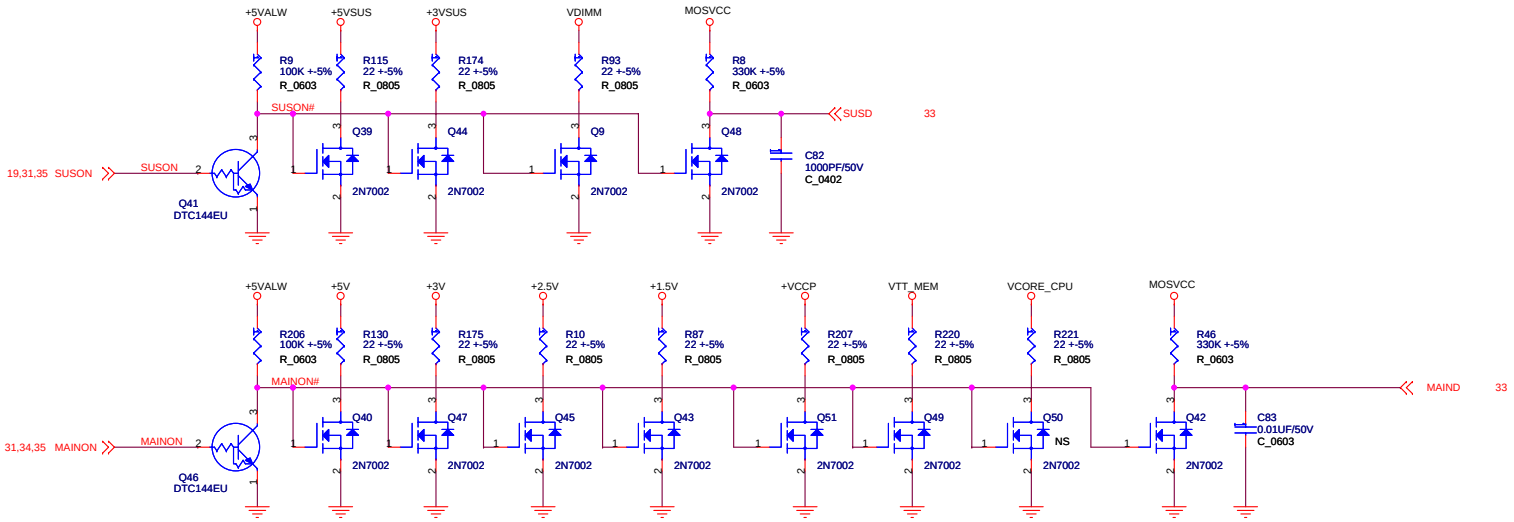

lenovo联想

LENOVO.NOD
HuZW LiXINP LiYJK LvXDA

Title: Discharge

Size: Custom | Document Number: Taurus2 | Rev: s0.1

Date: Thursday, June 29, 2006 | Sheet 32 of 40

"PROPERTY NOTE: this document contains information confidential and property to LENOVO PND and shall not be reproduced or transferred to other documents or disclosed to others or used for any purpose other than that for which it was obtained without the expressed written consent of LENOVO PND."

WWW.AliSaler.Com

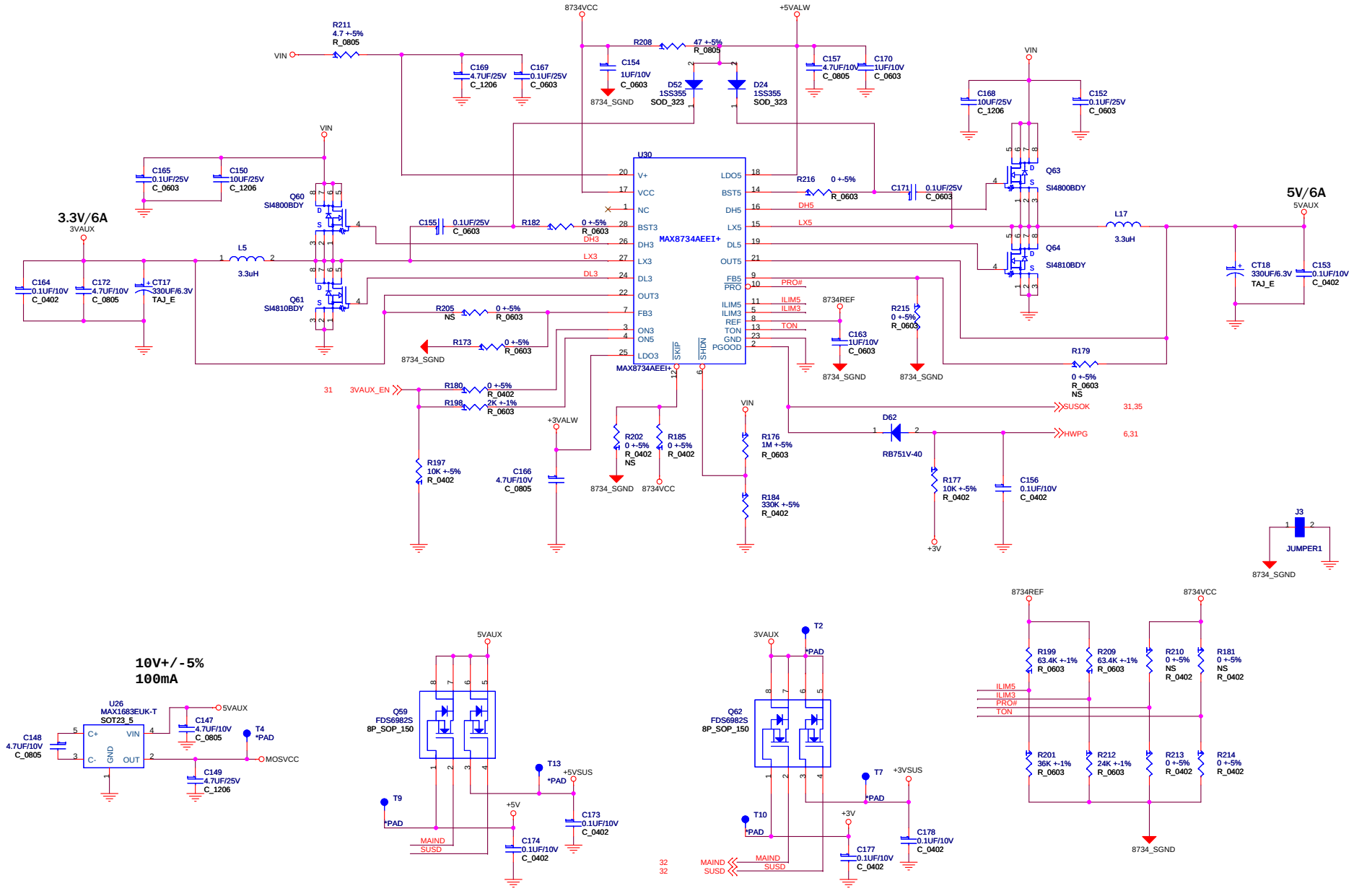

lenovo联想	LENOVO.NOD HuZW LiXINP LiYJK LvXDA
Title	System Power
Size Custom	Document Number Taurus2
Rev	s0.1
Date: Thursday, June 29, 2006	Sheet 33 of 40

"PROPERTY NOTE: this document contains information confidential and property to LENOVO PND and shall not be reproduced or transferred to other documents or disclosed to others or used for any purpose other than that for which it was obtained without the expressed written consent of LENOVO PND."

WWW.AliSaler.Com

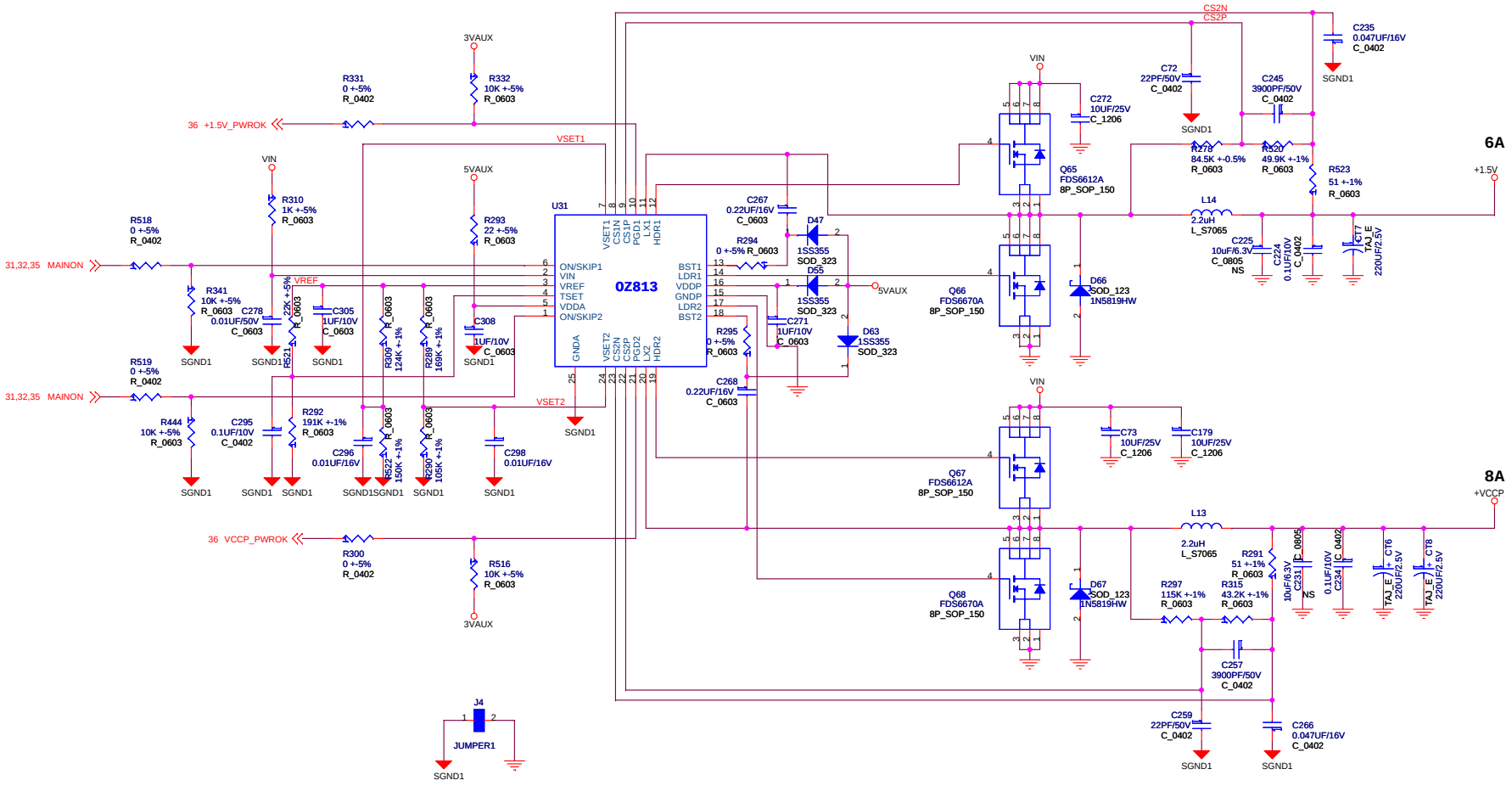

lenovo联想	LENOVO.NOD HuZW LiXINP LiYJK LvXDA
Title	VCCP GMCH_CORE 1.5V
Size: Custom	Document Number: Taurus2 — Rev s0.1
Date: Thursday, June 29, 2006	Sheet 34 of 40

"PROPERTY NOTE: this document contains information confidential and property to LENOVO PND and shall not be reproduced or transferred to other documents or disclosed to others or used for any purpose other than that for which it was obtained without the expressed written consent of LENOVO PND."

WWW.AliSaler.Com

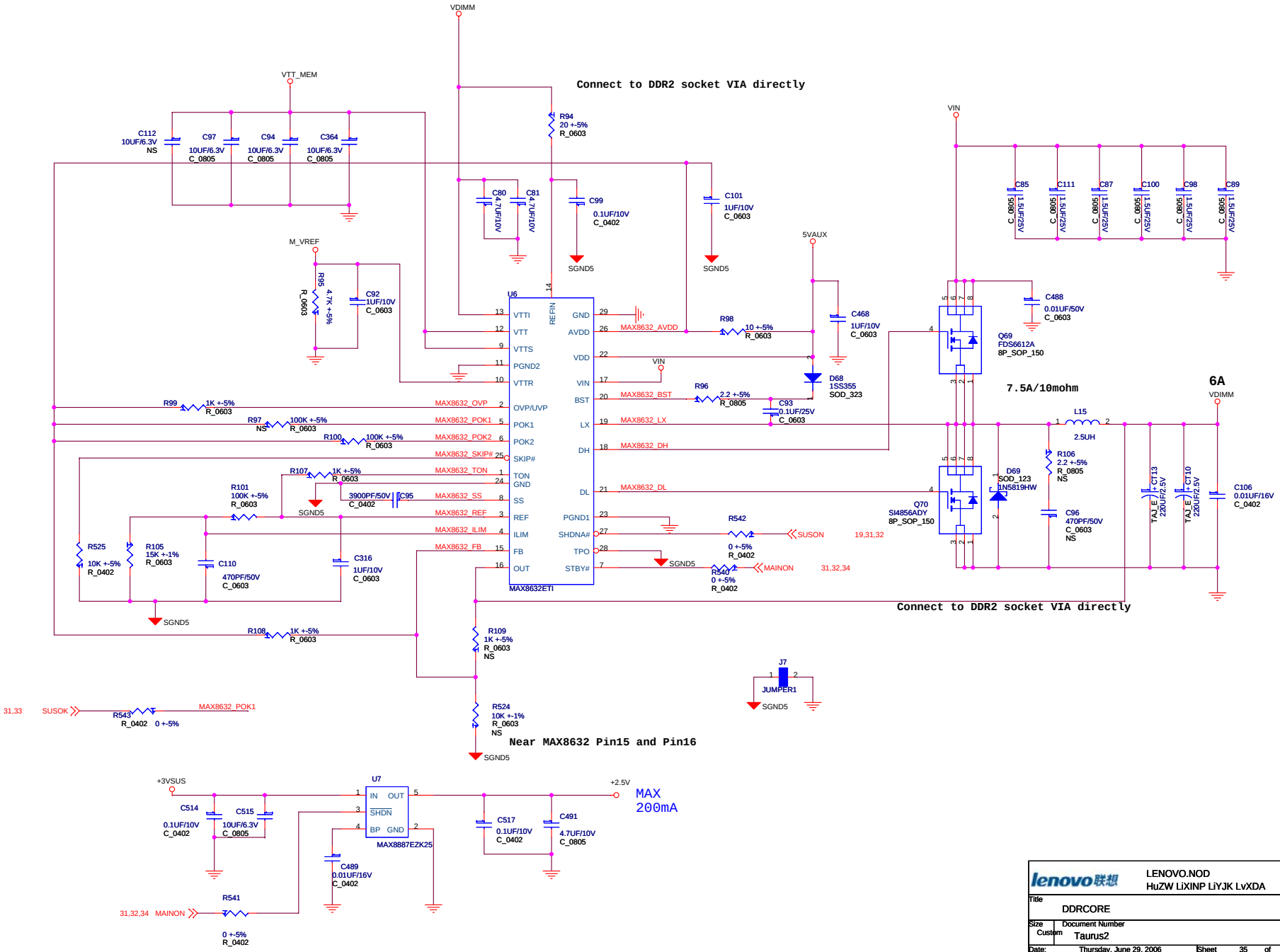

lenovo联想

LENOVO.NOD
HuZW LiXINP LiYJK LvXDA

Title: DDRCORE

Size: Custom | Document Number: Taurus2 | Rev: s0.1

Date: Thursday, June 29, 2006 | Sheet 35 of 40

"PROPERTY NOTE: this document contains information confidential and property to LENOVO PND and shall not be reproduced or transferred to other documents or disclosed to others or used for any purpose other than that for which it was obtained without the expressed written consent of LENOVO PND."

WWW.AliSaler.Com

IMVP-6 solution for Merom LV: 1-phase/23A
With DCR Sensing

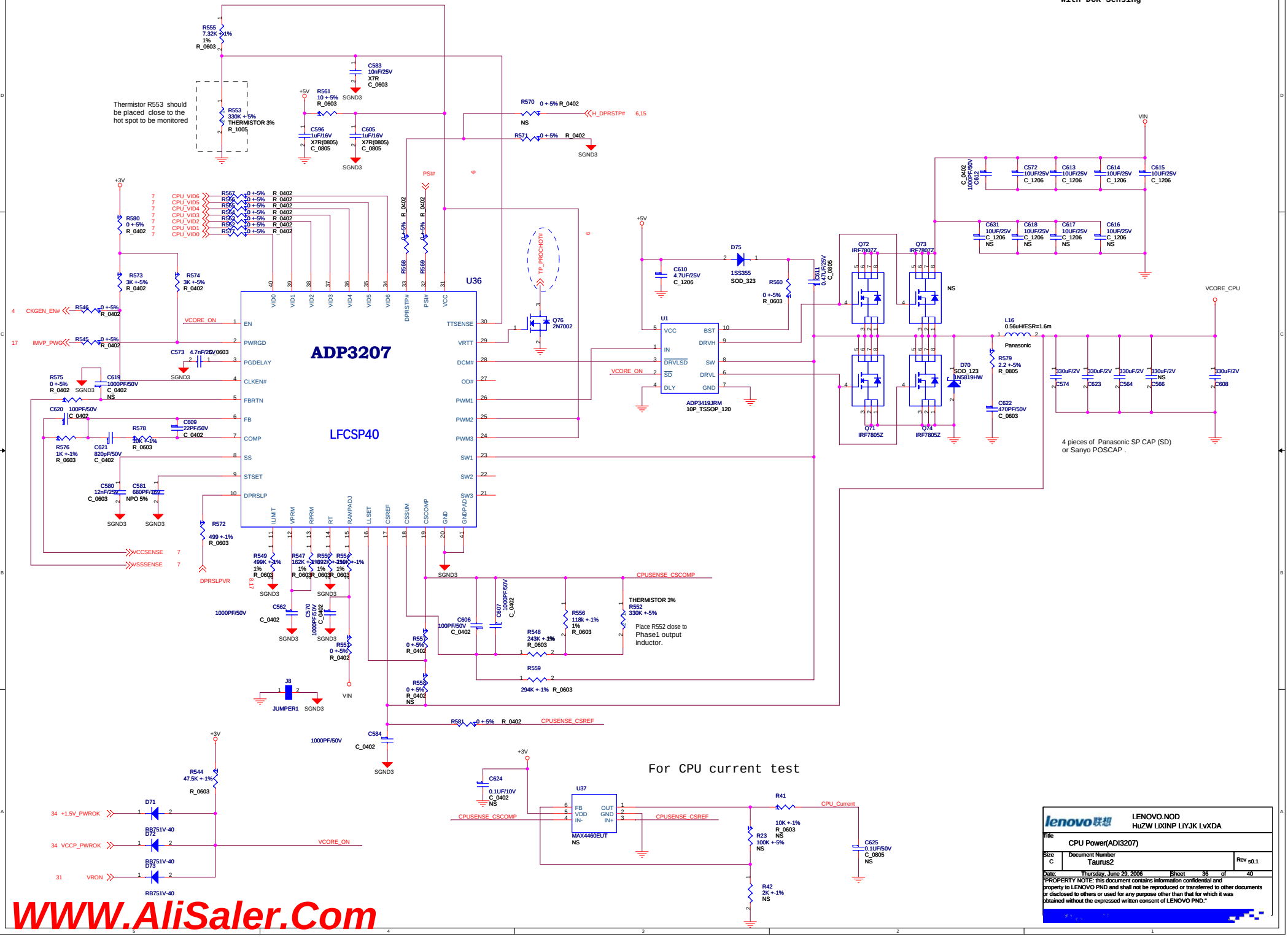

lenovo联想	LENOVO,NOD HuZW LiXINP LiYJK LvXDA
Title	CPU Power(ADI3207)
Size C	Document Number Taurus2
Rev	s0.1
Date: Thursday, June 29, 2006	Sheet 36 of 40

"PROPERTY NOTE: this document contains information confidential and property to LENOVO PND and shall not be reproduced or transferred to other documents or disclosed to others or used for any purpose other than that for which it was obtained without the expressed written consent of LENOVO PND."

WWW.AliSaler.Com

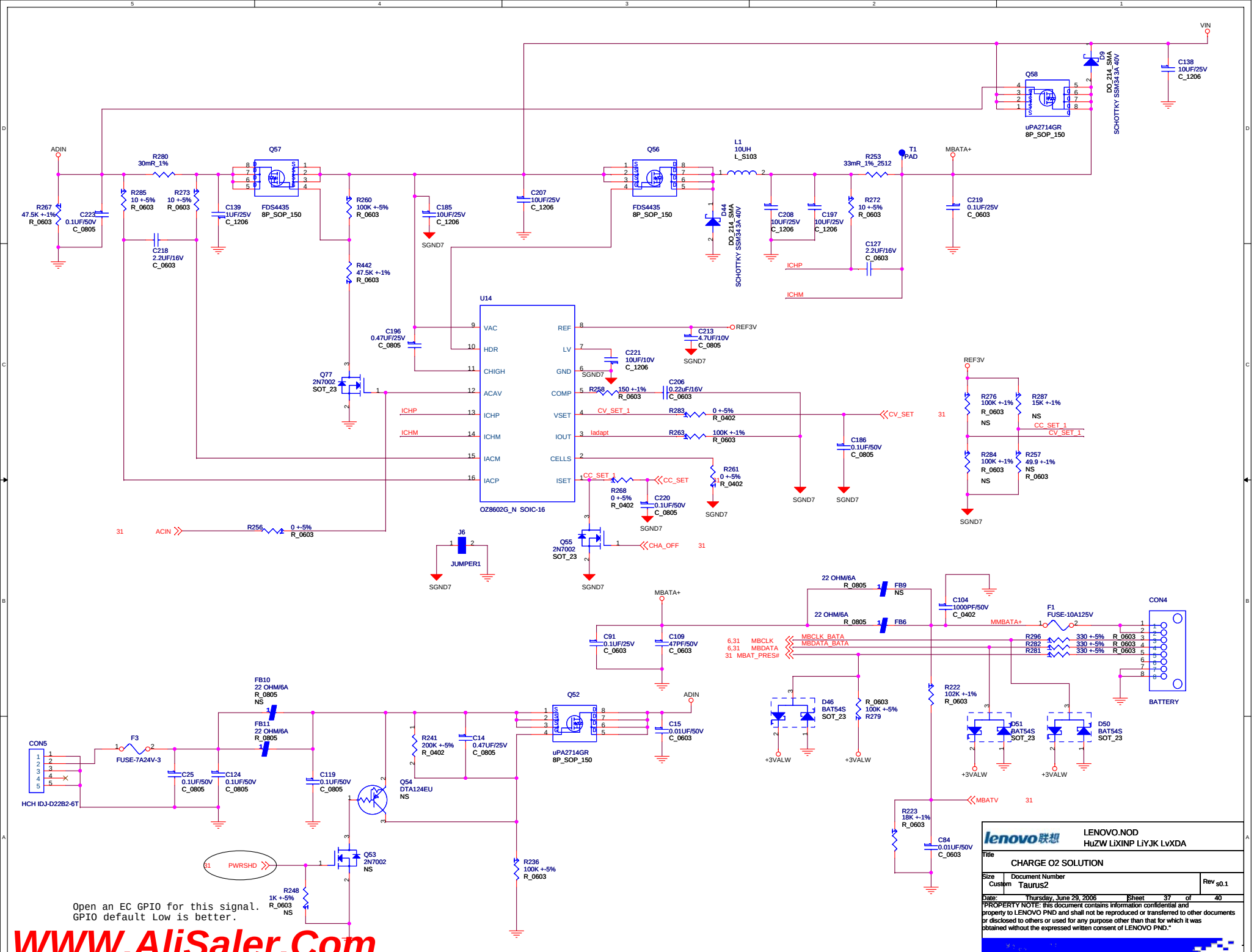

WWW.AliSaler.Com

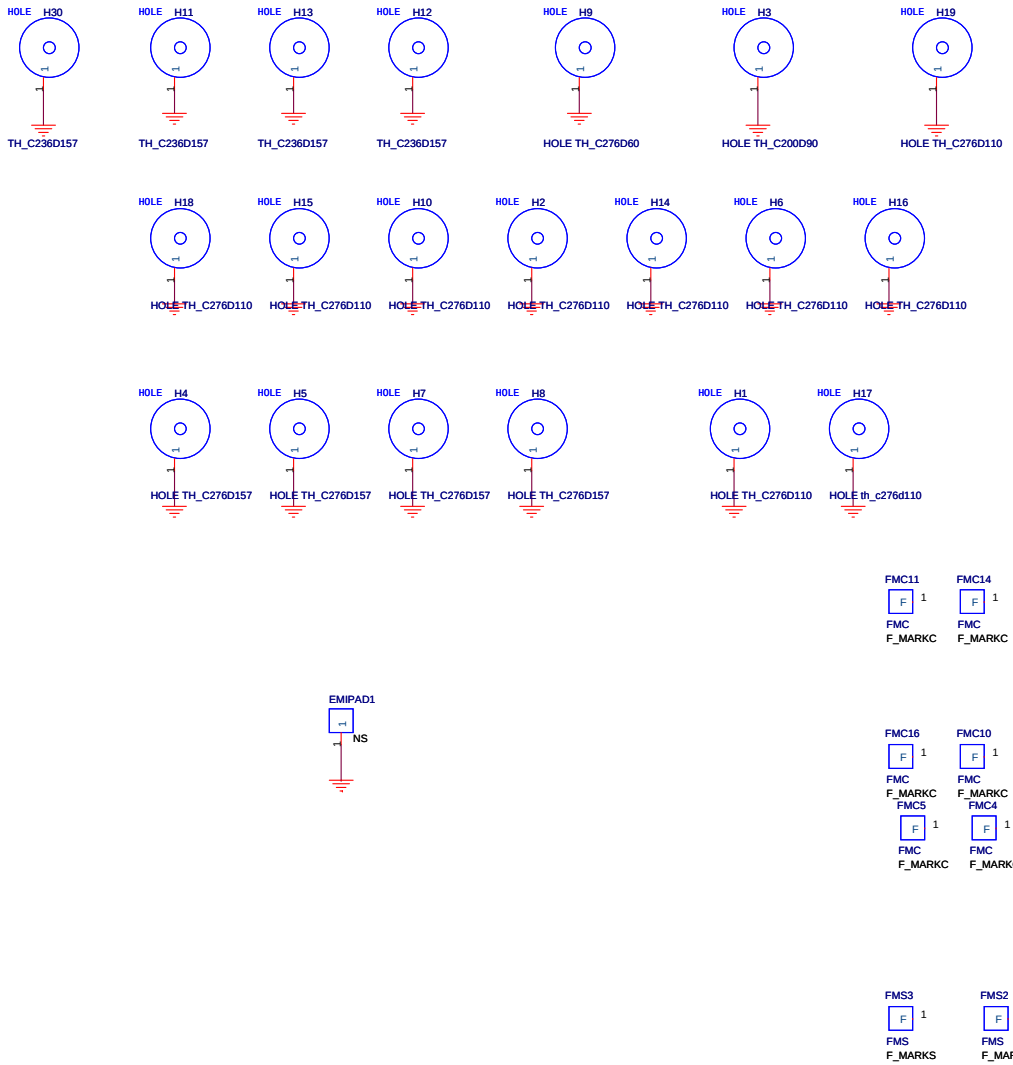

lenovo联想

LENOVO.NOD
HuZW LiXINP LiYJK LvXDA

Title
EMI PADs & HOLES

Size	Document Number	Rev
Custom	Taurus2	s0.1

Date: Thursday, June 29, 2006 Sheet 38 of 40

"PROPERTY NOTE: this document contains information confidential and property to LENOVO PND and shall not be reproduced or transferred to other documents or disclosed to others or used for any purpose other than that for which it was obtained without the expressed written consent of LENOVO PND."

WWW.AliSaler.Com

Check with the PICARSO!!

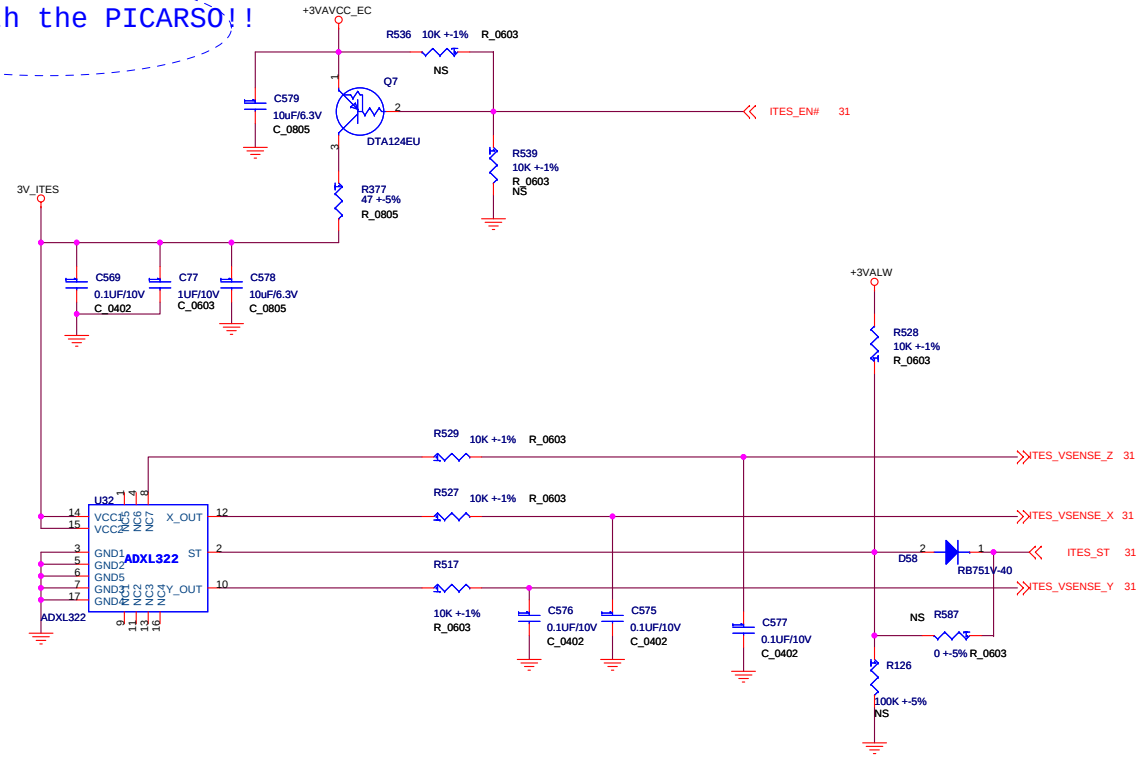

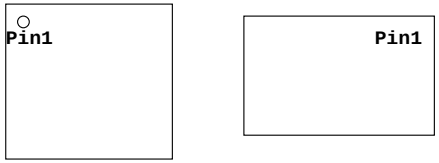

lenovo联想	LENOVO.NOD HuZW LiXINP LiYJK LvXDA
Title	APS
Size: Custom	Document Number: Taurus2
Rev	s0.1
Date: Thursday, June 29, 2006	Sheet 39 of 40

"PROPERTY NOTE: this document contains information confidential and property to LENOVO PND and shall not be reproduced or transferred to other documents or disclosed to others or used for any purpose other than that for which it was obtained without the expressed written consent of LENOVO PND."

WWW.AliSaler.Com

lenovo联想	LENOVO.NOD HuZW LiXINP LiYJK LvXDA
Title	Change list
Size A	Document Number Taurus2
Rev	s0.1
Date:	Thursday, June 29, 2006
Sheet	40 of 40

"PROPERTY NOTE: this document contains information confidential and property to LENOVO PND and shall not be reproduced or transferred to other documents or disclosed to others or used for any purpose other than that for which it was obtained without the expressed written consent of LENOVO PND."

WWW.AliSaler.Com