THIS DRAWING AND SPECIFICATIONS, HEREIN, ARE THE PROPERTY OF INVENTEC CORPORATION AND SHALL NOT BE REPODUCED, COPIED, OR USED IN WHOLE OR IN PART AS THE BASIS FOR THE MANUFACTURE OR SALE OF ITEMS WITHOUT WRITTEN PERMISSION, INVENTEC CORPORATION 2000 ALL RIGHT RESERVED

HSF Property : **Comply iSupplier SYSTEM HSF PROPERTY ATTRIBUTE UP-TO DATE VALUE**

PCB:6050A2498701

KEPLER 1.0:
E1-1200 (6L):1310A2498703---10/100
E2-1800 (6L):1310A2498704---10/100
E1-1200 (6L):1310A2498705---GIGA
E2-1800 (6L):1310A2498706---GIGA
Battery Cell:6027B0039401
Nut:

WWW.AliSaler.Com

RTL8165EH (10/100) LDO MODE
R680:MOUNT
R672:NA
R14143:NA
C741:NA
C713:NA
C12734:NA
C12735:NA
C12736:NA
C12737:NA
C12754:NA
C12756:NA
L332:NA
U470:NA
U9848:MOUNT 6016B0008001
U320:MOUNT 6019B0928301
R14131:NA

RTL8161FH (GIGA-LAN) SWITCH MODE
R680:NA
R672:MOUNT 60130B0000ZT
R14143:MOUNT 60130B00000Z
C741:MOUNT
C713:MOUNT
C12734:MOUNT
C12735:MOUNT
C12736:MOUNT
C12737:MOUNT
C12754:MOUNT
C12756:MOUNT
L332:MOUNT
U470:MOUNT 6016B0010601
U9848: NA
U320:MOUNT 6019B0928101
R14131:MOUNT

KF14BR

AMD BRAZOS 2.0

DB

2011/11/02

BOM CHANGE

L332:6014B0200401

DB(MOUNT)
X805:6018A0009301-004
C1329,C1303:6010A0036105
R1208,R1269:60130B10600Y
R562:60130B10500Y
X301:6018B0044501
C577,C578:6010071502AT
C723,C724:6010B0010103
X304:6018B0044501

DB(OPEN)
R16556
R16557
D321:6011A0026803
R14130

POWER BOARD :6050A2493201
USB BOARD :6050A2493701
PICK BUTTOM BOARD :6050A2493601

DATE	CHANGE NO.	REV
2011/06/20	2011-ECO-012815	B
2011/03/21	2011-ECO-005030	A

	EE	DATE	POWER	DATE
DRAWER	ALAN WANG	2010-08-06	ALBERT	2010-08-06
DESIGN	ALAN WANG	2010-08-06	ALBERT	2010-08-06
CHECK				
RESPONSIBLE				

SIZE = 3 VER : A02
FILE NAME : BRAZOS-6050A2412701
P/N 6050A2412701

INVENTEC

TITLE SARAH
BRAZOS

SIZE	CODE	DOC. NUMBER	REV
A3	CS	1310A24127-0-MTR	B

SHEET 1 OF 54

WWW.AliSaler.Com

WWW.AliSaler.Com

Index Of Content

PAGE

01- Project Name
02- Index
03- Block Diagram
04- POWER PROCEDURE
05- POWER SEQENCE BLOCK
06- POWER SEQENCE FIGURE
07- DC & BATTERY CHARGER
08- BATTERY CONN
09- +V3A & +V5A
10- +V1.1A & +V1S & +V1.1S
11- +V1.5
12- APU_VDD & APU_VDDNB
13- +V1.8S
14- +V1.5S & +V3S & +V5S
15- BLANK
16- RF
17- APU
18- APU
19- APU
20- DDR3 DIMM0
21- DDR3 DIMM1
22- FAN & THERMAL IC
23- FCH
24- FCH
25- FCH

PAGE

26- FCH
27- FCH
28- Required & Debug Straps
29- KBC
30- Keyboard CONN & Indicate LED& TouchPad CONN
31- HDMI CONNECT
32- CRT CONNECT
33- LCM CONNECT
34- SATA HDD & SATA ODD CONN PBN CABLE CN ON MB & USB BOARD ON MB
35- USB Port0
36- LAN
37- RJ45 CONN
38- CARD READER
39- AUDIO &SPEAKER CONN
40- HP and MIC CONN
41- Screws&EMI CAP
42- WLAN CONN
43- POWER BUTTON BOARD & PICK BUTTON BOARD
44- USB BOARD

CHANGE by	Chang, Irene	4-Oct-2011	

INVENTEC

TITLE: Sarah 15.6 Brazos
Index

SIZE	CODE	DOC. NUMBER	REV
A3	CS	1310A24127-0-MTR	B

SHEET 2 OF 45

WWW.AliSaler.Com

WWW.AliSaler.Com

Brazos

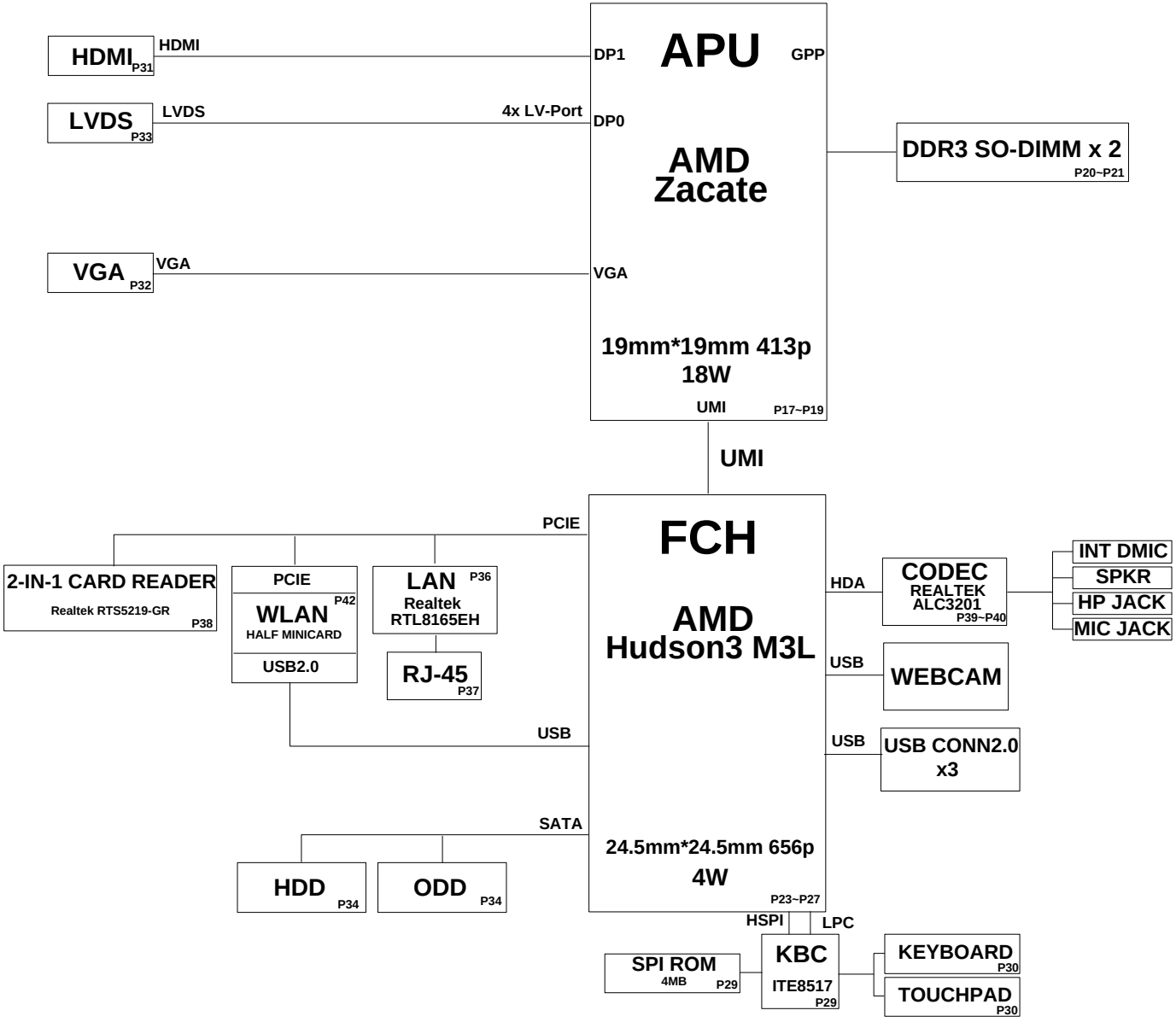

CHANGE by	Chang, Irene	4-Oct-2011	

INVENTEC

TITLE: *Sarah 15.6 Brazos*
Block Diagram

SIZE	CODE	DOC. NUMBER	REV
A3	CS	1310A24127-0-MTR	B

SHEET 3 OF 45

WWW.AliSaler.Com

WWW.AliSaler.Com

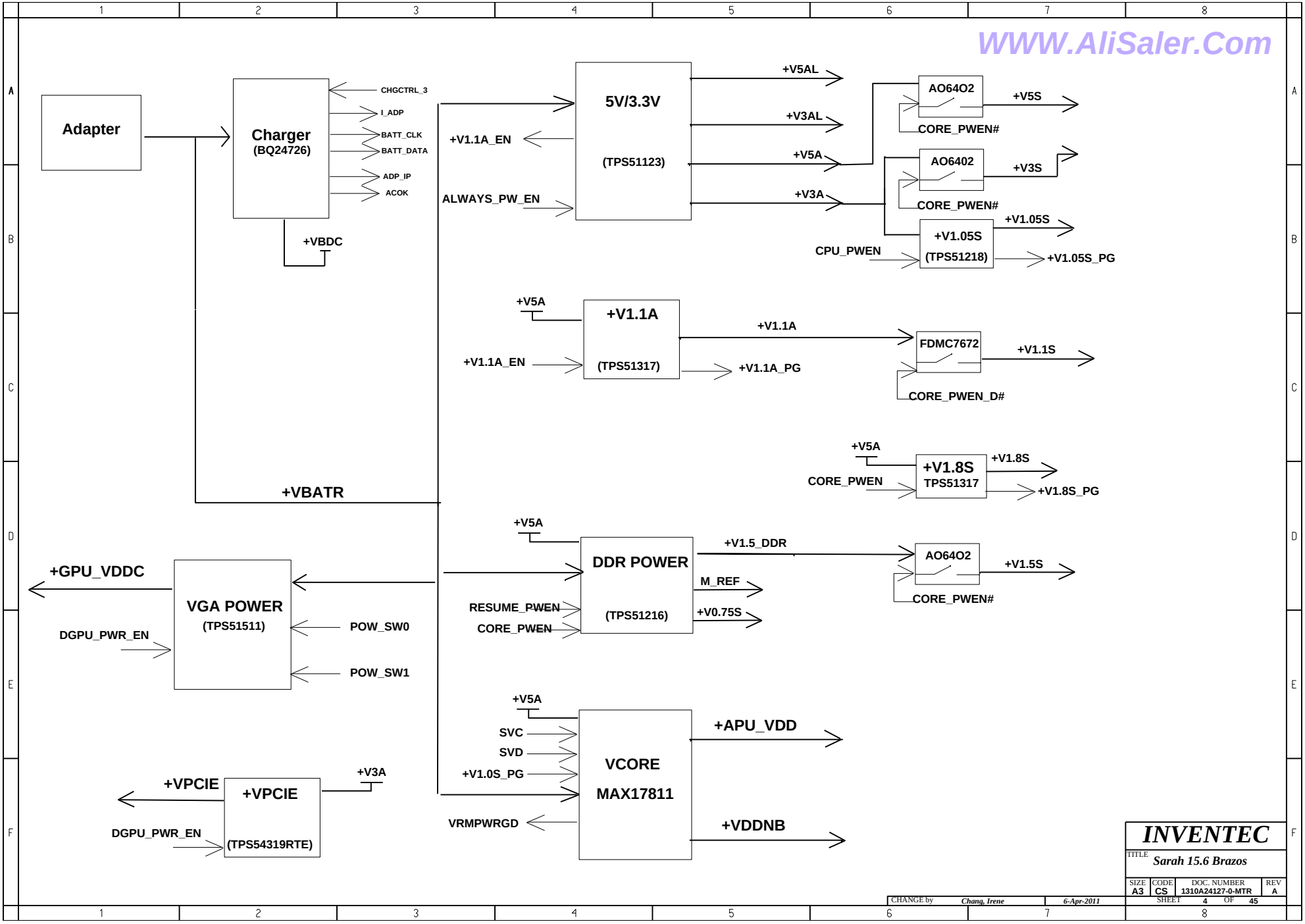

INVENTEC			
TITLE: Sarah 15.6 Brazos			
SIZE: A3	CODE: CS	DOC. NUMBER: 1310A24127-0-MTR	REV: A
CHANGE by: Chang, Irene	6-Apr-2011	SHEET 4 OF 45	

WWW.AliSaler.Com

WWW.AliSaler.Com

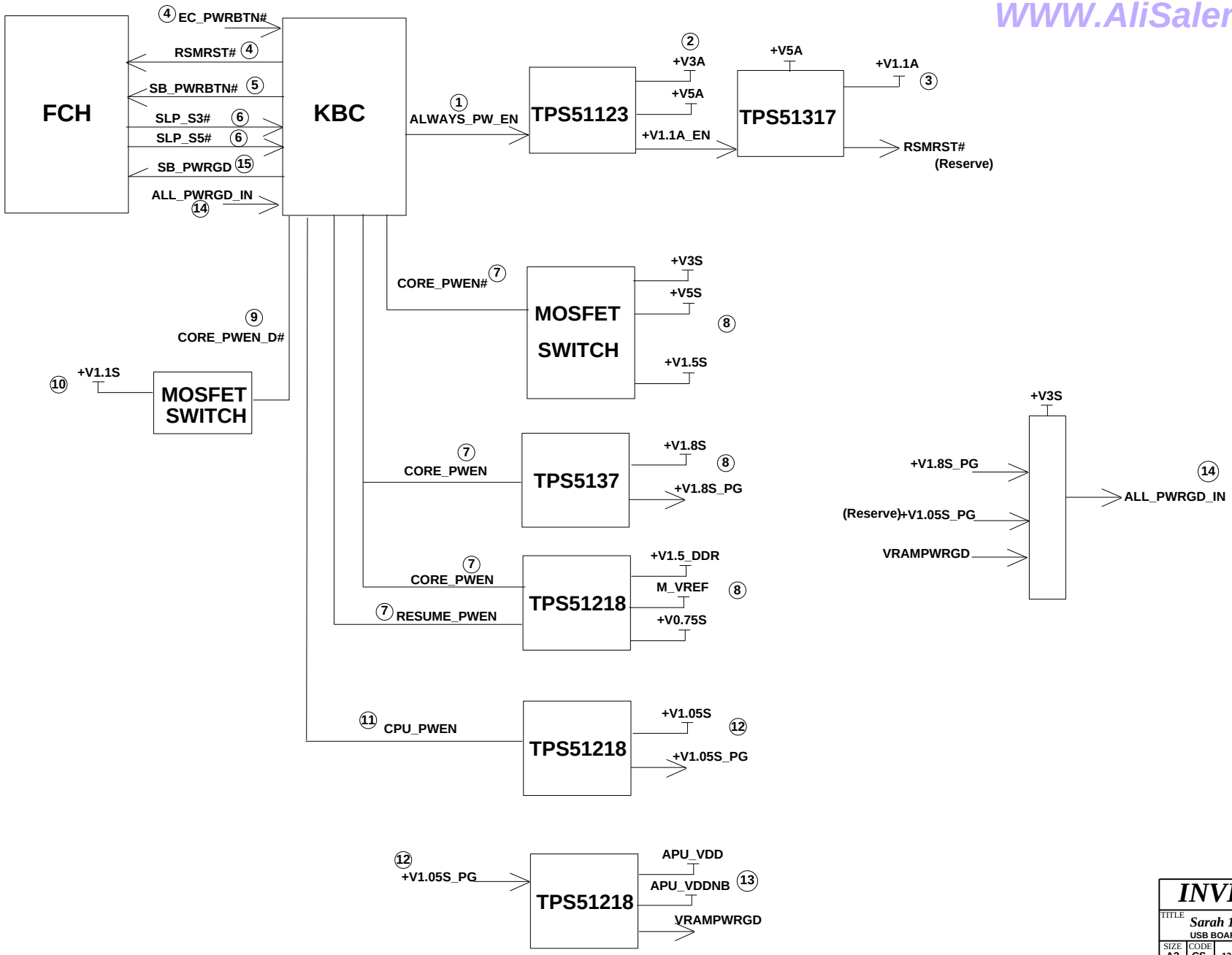

CHANGE by	Chang, Irene	6-Apr-2011	

INVENTEC

TITLE: *Sarah 15.6 Brazos*
USB BOARD

SIZE	CODE	DOC. NUMBER	REV
A3	CS	1310A24127-0-MTR	A

SHEET 5 OF 45

WWW.AliSaler.Com

WWW.AliSaler.Com

POWER ON SEQUENCW REQUIRED.

HUDSON-M2

1. +V3.3A RAMP BEFORE +V1.1A
2. +V3.3S RAMP BEFORE +V1.1S
3. +V1.8S RAMP BEFORE +V1.1S
4. +V3AL ramping down tima > 300uS
5. 50uS <= ALL POWER RAILS EXPECT V3AL <= 40mS
6. 100uS <= V3AL <= 40mS

APU

1. GRUOP A (VDDIO,VDDA) ramp before GROUP B (VDD_RUN, VDDNB_RUN, VDDP, VDDR)

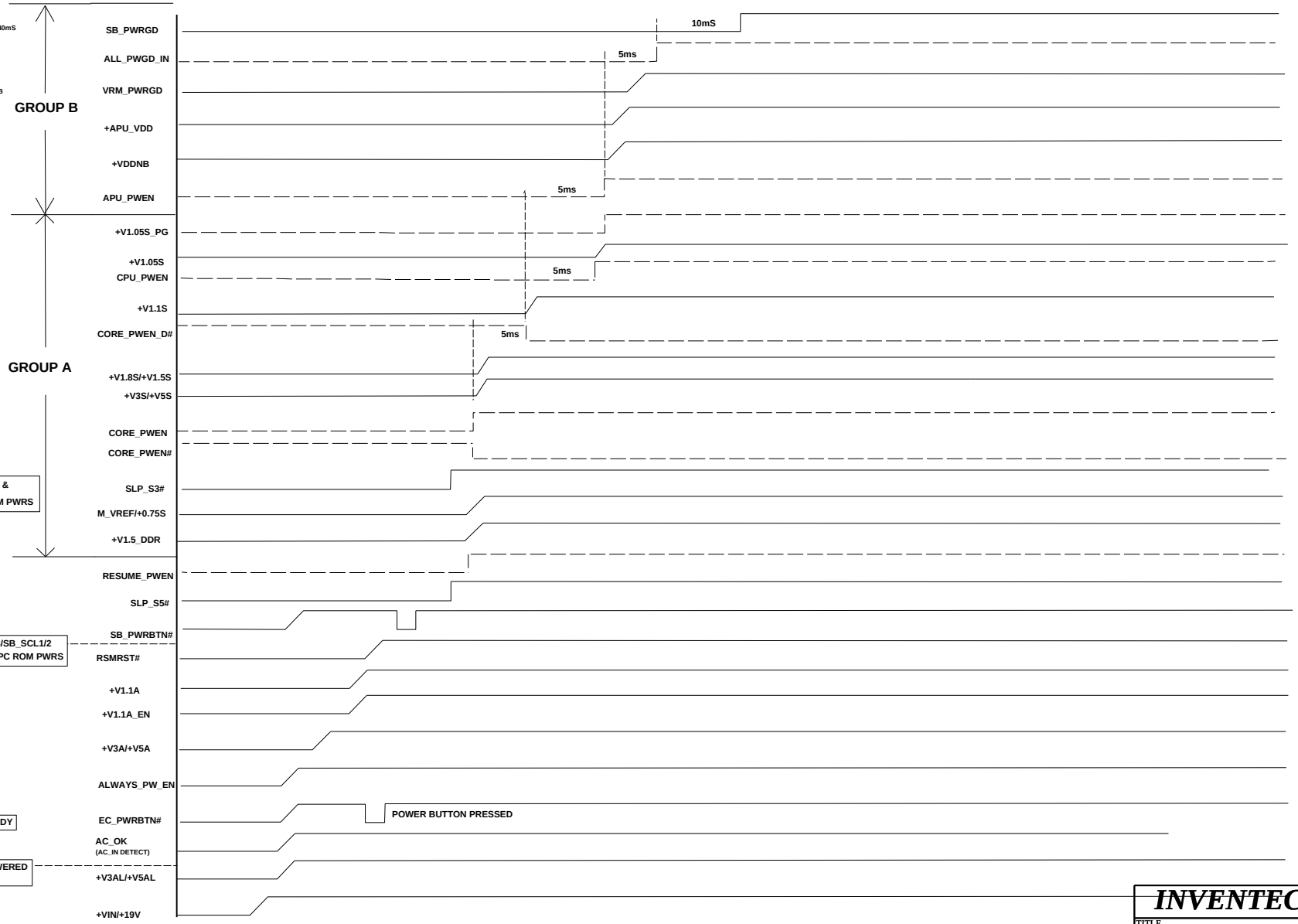

CHANGE by	Chang, Irene	6-Apr-2011	

INVENTEC

TITLE *Sarah 15.6 Brazos*
POWER BUTTON BOARD

SIZE	CODE	DOC. NUMBER	REV
A3	CS	1310A24127-0-MTR	A

SHEET 6 OF 45

WWW.AliSaler.Com

WWW.AliSaler.Com

*BOM
6012B0422402

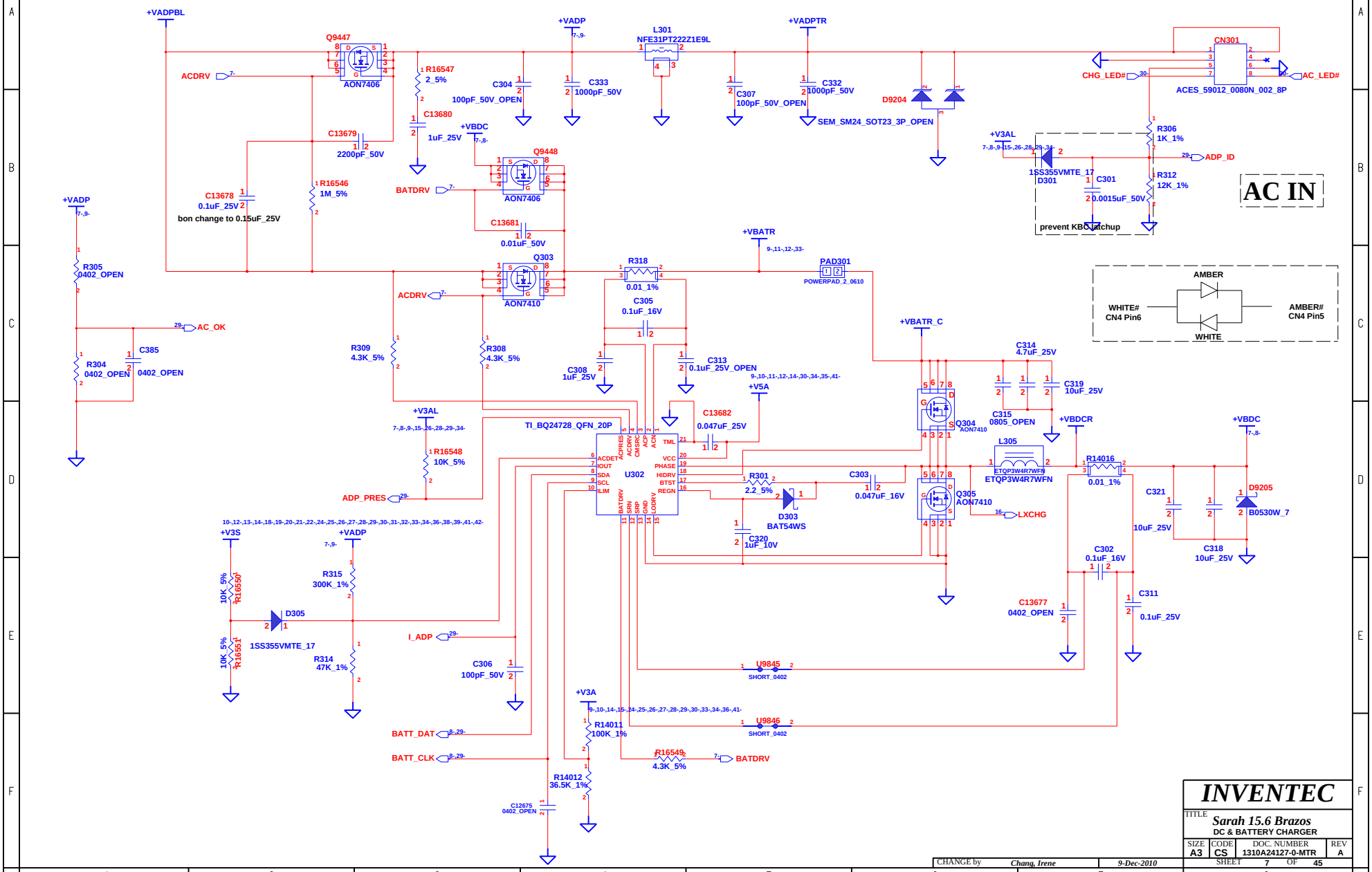

INVENTEC

TITLE
Sarah 15.6 Brazos
DC & BATTERY CHARGER

SIZE	CODE	DOC. NUMBER	REV
A3	CS	1310A24127-0-MTR	A

SHEET 7 OF 45

CHANGE by Chang, Irene 9-Dec-2010

WWW.AliSaler.Com

WWW.AliSaler.Com

ok

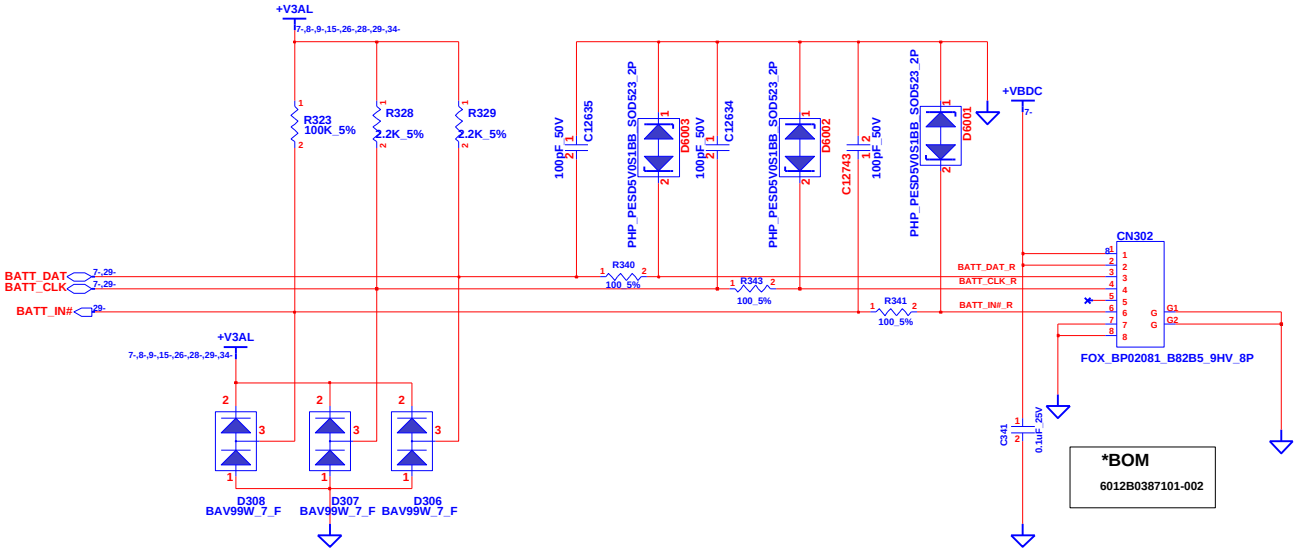

CHANGE by	Chang, Irene	24-Dec-2010	

INVENTEC

TITLE *Sarah 15.6 Brazos*
BATTERY CONN

SIZE	CODE	DOC. NUMBER	REV
A3	CS	1310A24127-0-MTR	B

SHEET 8 OF 45

WWW.AliSaler.Com

WWW.AliSaler.Com

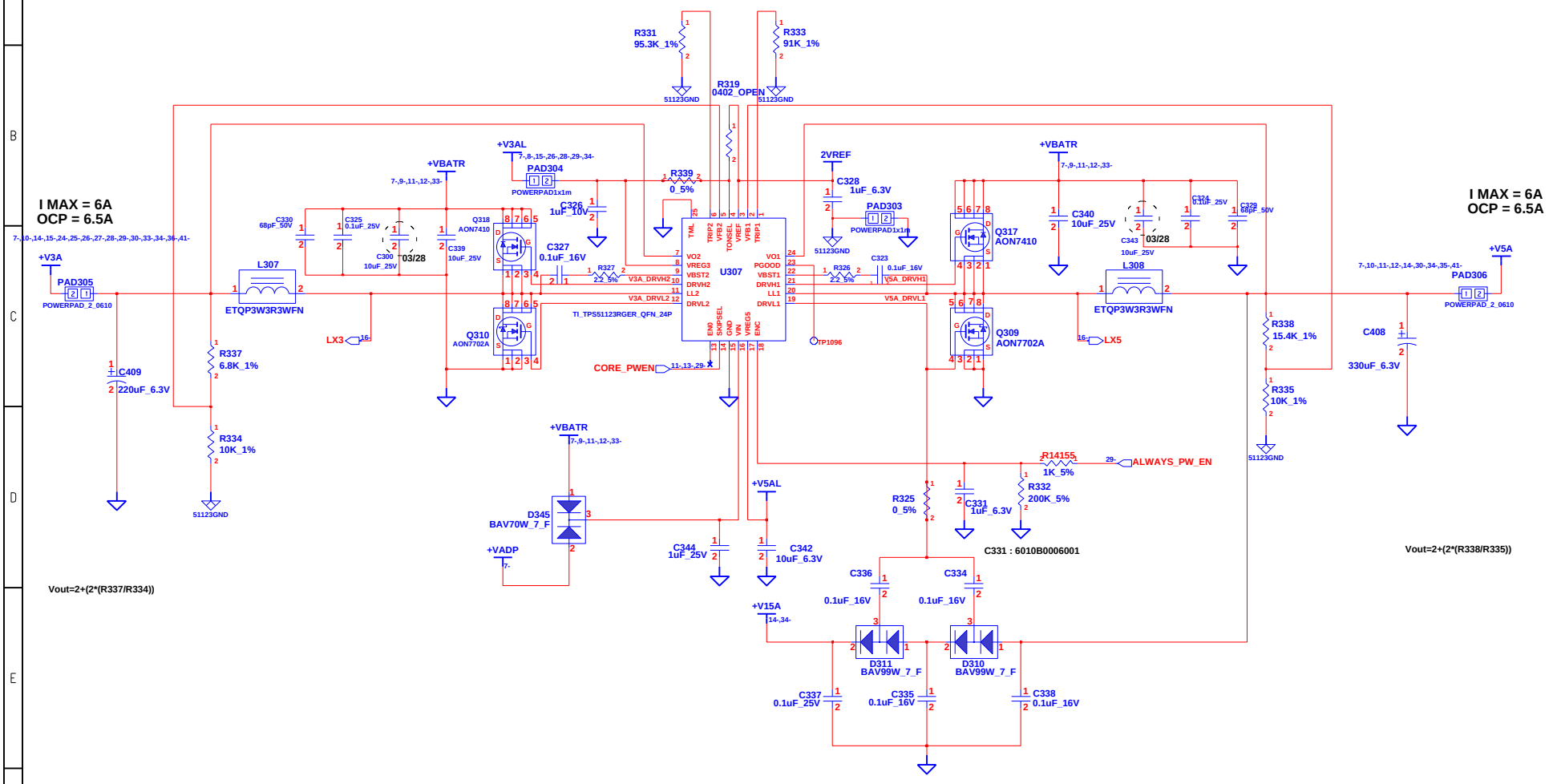

INVENTEC			
TITLE: *Sarah 15.6 Brazos* *+V3A & V5A*			
SIZE A3	CODE CS	DOC. NUMBER 1310A24127-0-MTR	REV B
CHANGE by *Chang, Irene*	*7-Aug-2010*	SHEET 9 OF 45	

WWW.AliSaler.Com

WWW.AliSaler.Com

+V1.1A +V1S +V1.1S

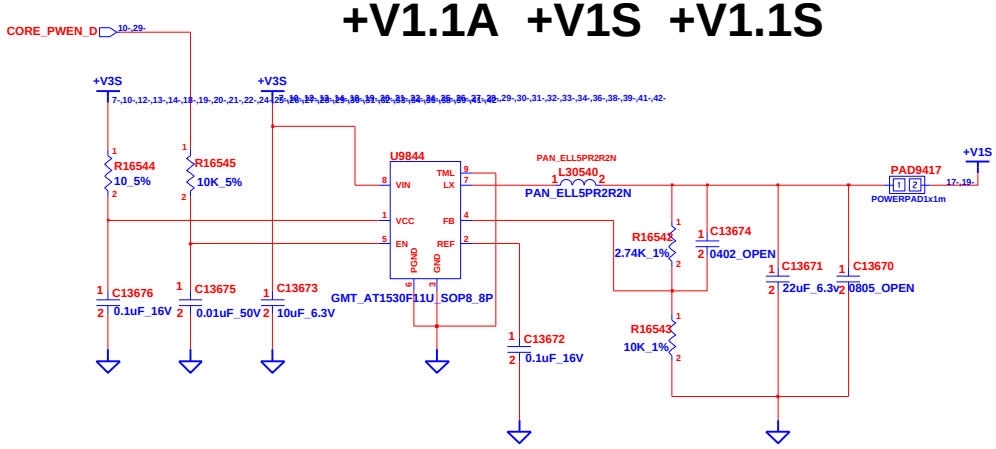

Vout=0.8*(1+(R16542/R16543))

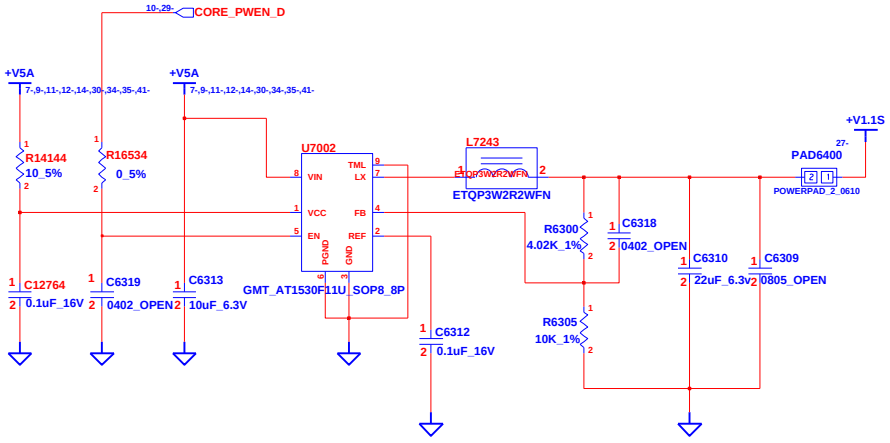

Vout=0.8*(1+(R6300/R6305))

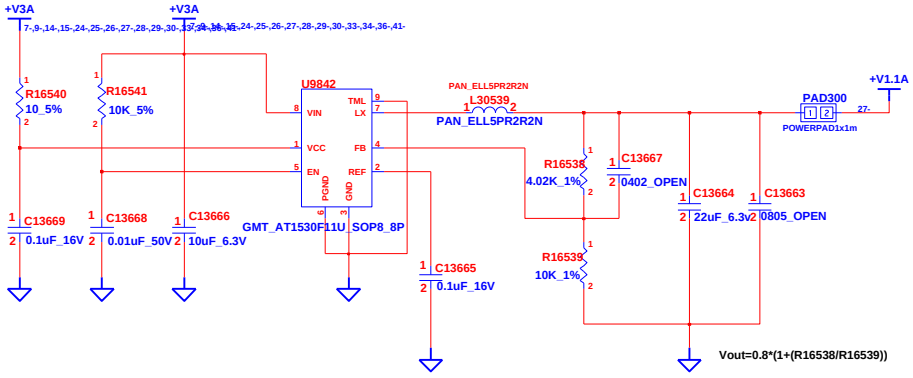

Vout=0.8*(1+(R16538/R16539))

CHANGE by	KF14BR	29-Sep-2011	

INVENTEC

TITLE KF14BR-SCHE-DB-20110928-M3L

SIZE	CODE	DOC. NUMBER	REV
A3	CS		

SHEET 10 OF 45

WWW.AliSaler.Com

WWW.AliSaler.Com

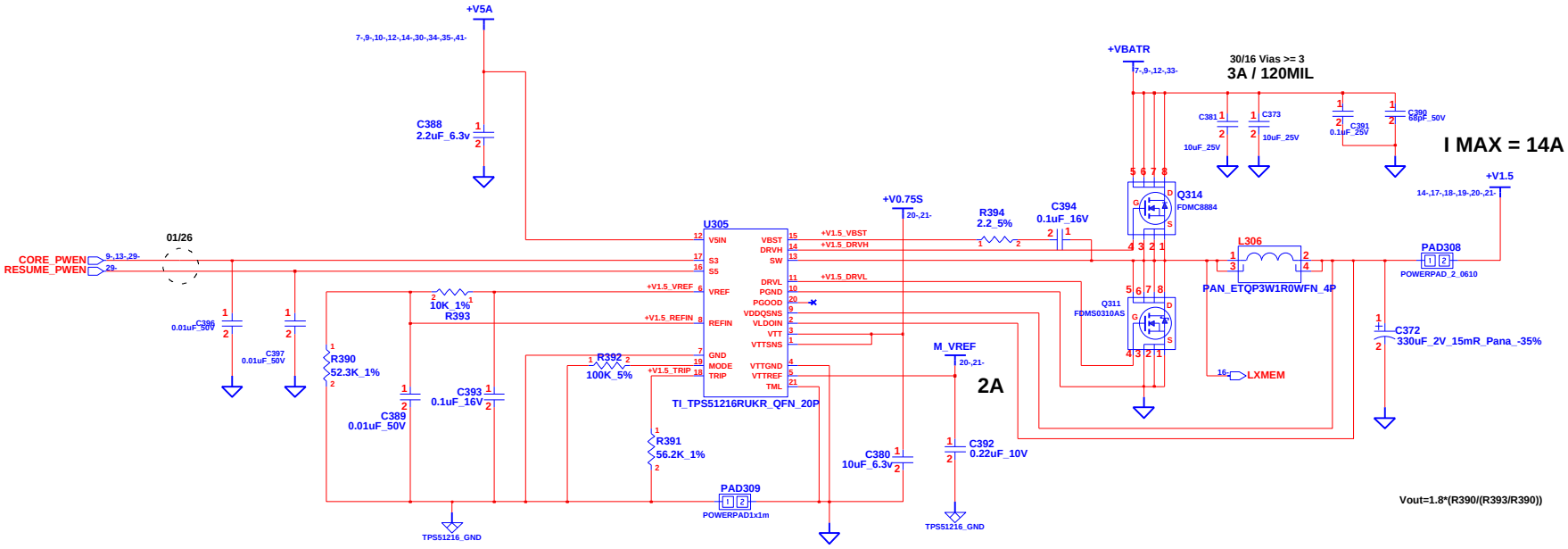

NOTE: DDR3 REGULATOR

INVENTEC			
TITLE: *Sarah 15.6 Brazos* +V1.5_DDR			
SIZE: A3	CODE: CS	DOC. NUMBER: 1310A24127-0-MTR	REV: B
CHANGE by: *Chang, Irene*	*7-Aug-2010*	SHEET 11 OF 45	

WWW.AliSaler.Com

WWW.AliSaler.Com

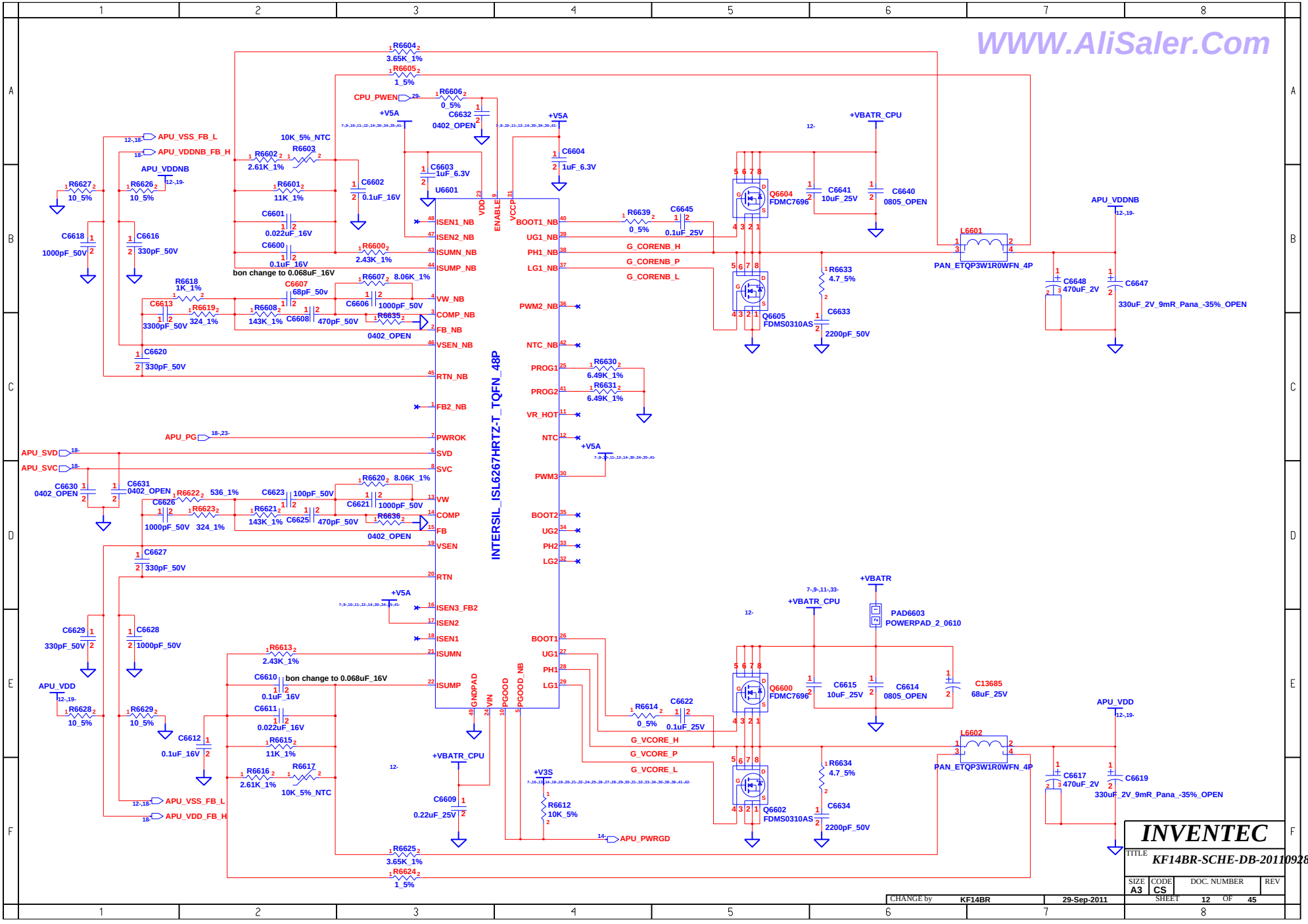

WWW.AliSaler.Com

WWW.AliSaler.Com

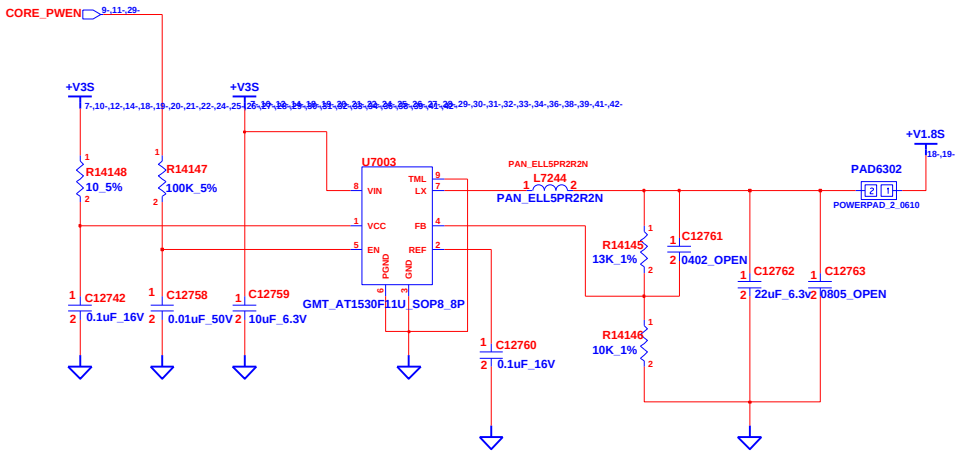

Vout=0.8*(1+(R14145/R14146))

CHANGE by	Chang, Irene	10-Aug-2011	

INVENTEC

TITLE *Sarah 15.6 Brazos*
+V1.0S &+V1.8S

SIZE	CODE	DOC. NUMBER	REV
A3	CS	1310A24127-0-MTR	B

SHEET 13 OF 45

WWW.AliSaler.Com

WWW.AliSaler.Com

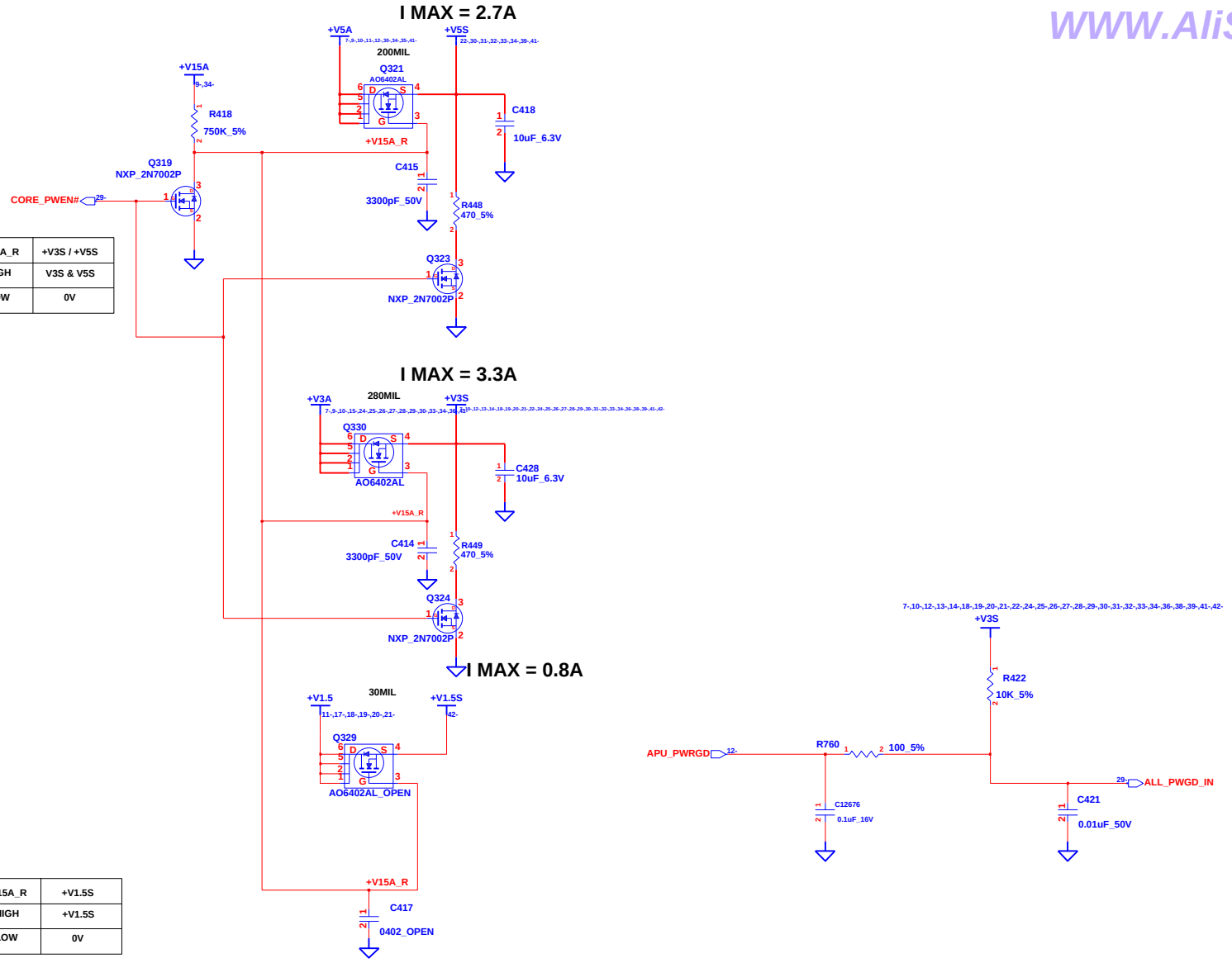

CORE_PWEN#	+V15A_R	+V3S / +V5S
LOW	HIGH	V3S & V5S
HIGH	LOW	0V

CORE_PWEN#	+V15A_R	+V1.5S
LOW	HIGH	+V1.5S
HIGH	LOW	0V

INVENTEC

TITLE: *Sarah 15.6 Brazos*
+V3S & +V5S & +V1.5S & +V1.1S

SIZE	CODE	DOC. NUMBER	REV
A3	CS	1310A24127-0-MTR	B

SHEET 14 OF 45

CHANGE by *Chang, Irene* *28-Mar-2011*

WWW.AliSaler.Com

WWW.AliSaler.Com

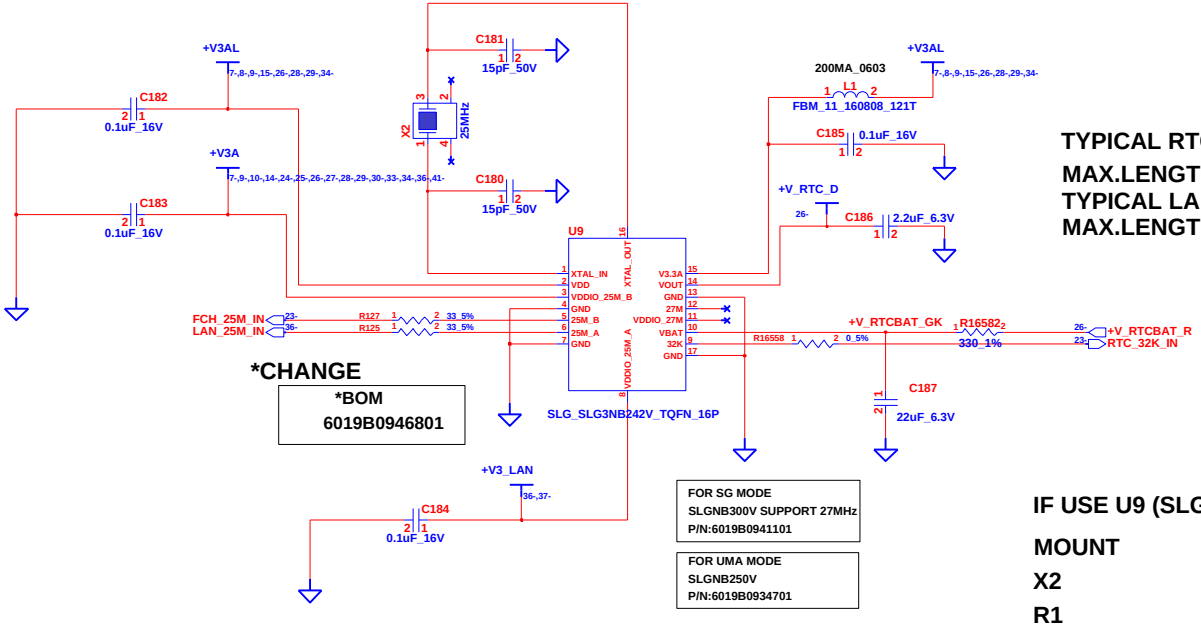

*CHANGE

*BOM
6019B0946801

FOR SG MODE
SLGNB300V SUPPORT 27MHz
P/N:6019B0941101

FOR UMA MODE
SLGNB250V
P/N:6019B0934701

TYPICAL RTC_32K IN TRACE <=6
MAX.LENGTH<=24
TYPICAL LAN_25M IN TRACE <=8
MAX.LENGTH<=12

IF USE U9 (SLG3NB250V)

MOUNT
X2
R1
C180
C181
C182
C183
C184
C185
C186
C187
R16557(PAGE23)
R16556(PAGE23)
R14130(PAGE36)

OPEN(PAGE26)
D321

OPEN(PAGE23)
R1208
R1269
X805
C1303
C1329

OPEN(PAGE36)
C723
C724
X304
R14130

OPEN(PAGE23)
X304
C724
C723

OPEN(PAGE23)
R562
X301
C577
C578

CHANGE by	Chang, Irene	23-Sep-2011	

INVENTEC

TITLE: Sarah 15.6 Brazos
+VDDC_GPU & +V1.0_DGPU

SIZE	CODE	DOC. NUMBER	REV
A3	CS	1310A24127-0-MTR	B

SHEET 15 OF 45

WWW.AliSaler.Com

WWW.AliSaler.Com

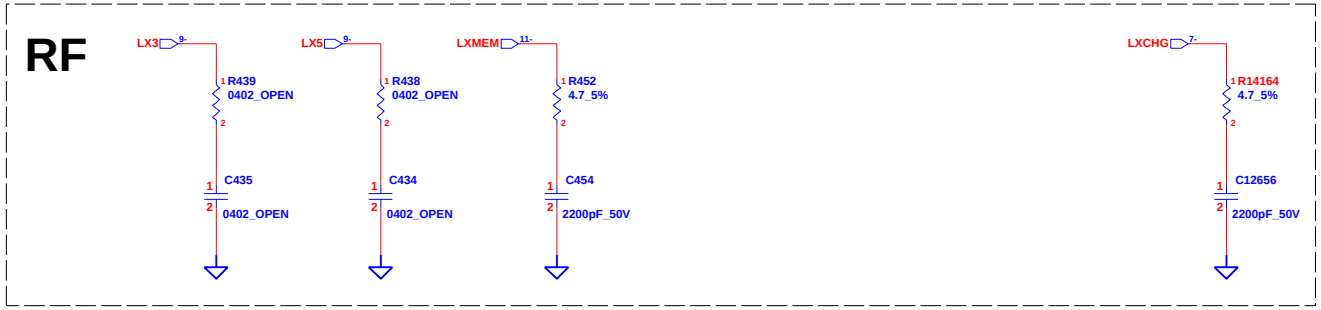

INVENTEC			
TITLE Sarah 15.6 Brazos CHECK			
SIZE A3	CODE CS	DOC. NUMBER 1310A24127-0-MTR	REV B
CHANGE by Chang, Irene	31-Aug-2010	SHEET 16 OF 45	

WWW.AliSaler.Com

WWW.AliSaler.Com

APU

MEMORY

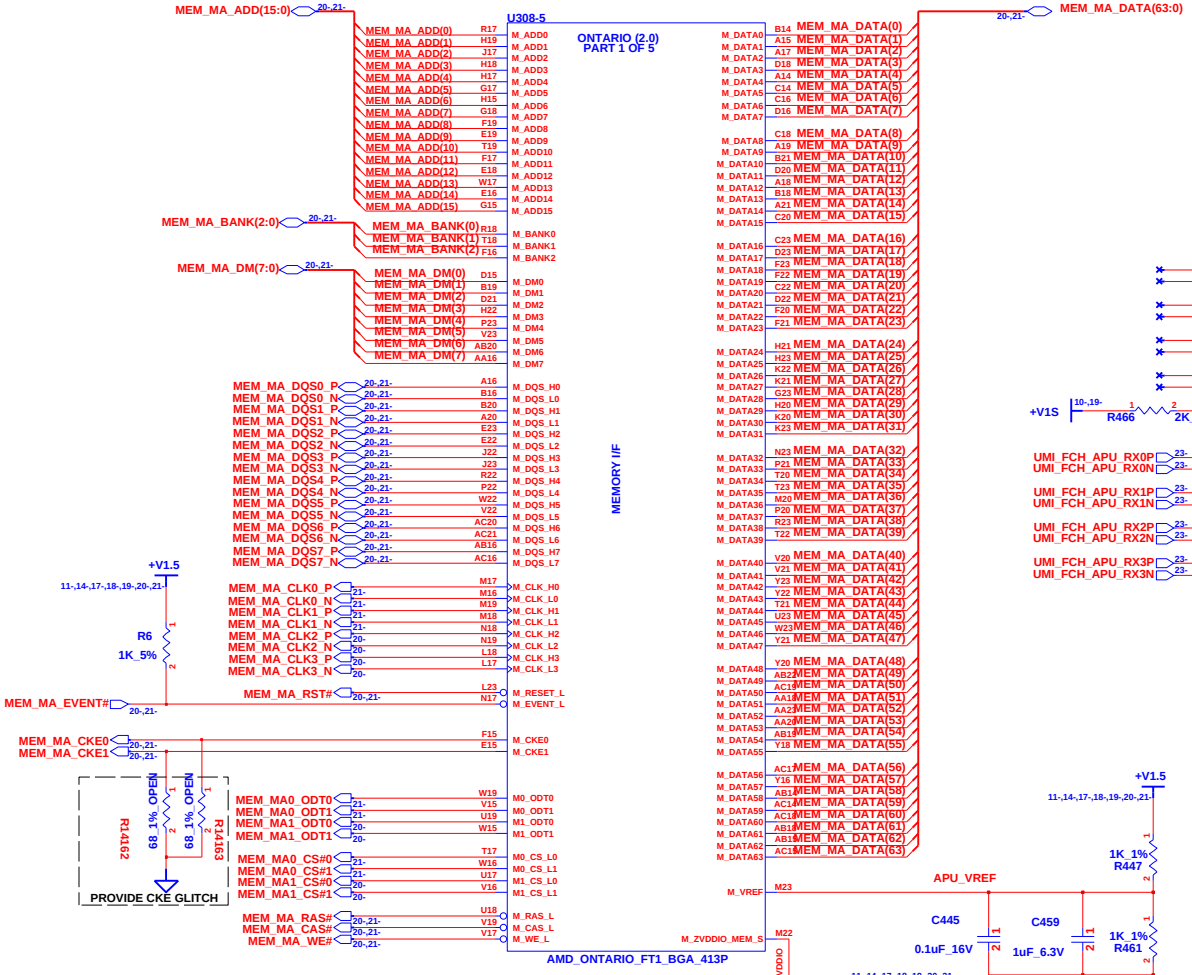

PEG & UMI BUS

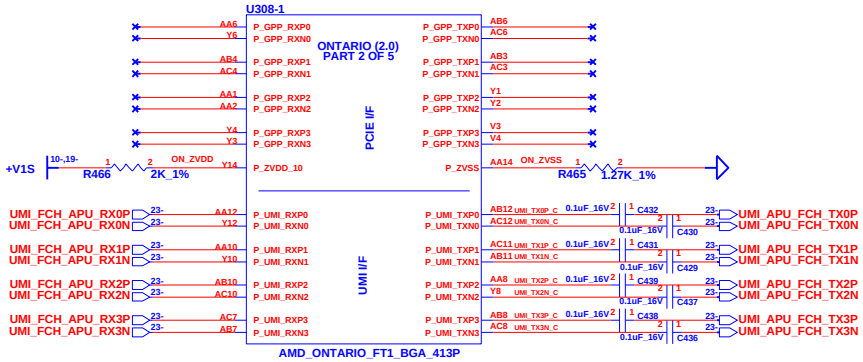

Route A-LINK DIFF PAIR @85 OHM+/- 10%

SO-DIMM Routing Rules for H = 0.1mm Stripline

Net Name	Target Impedance	Routing Dimensions	Spacing to Other	Self Spacing
CLK	72 ohm	0.2 / 0.1 / 0.2	0.5	0.5
ADD	40 ohm	0.2	0.2	0.3
DQS	90 ohm	0.1 / 0.1 / 0.1	0.4	0.4
Data/DM	40 ohm	0.2	0.3	0.3

INVENTEC

TITLE: Sarah 15.6 Brazos
CPU-1

SIZE	CODE	DOC. NUMBER	REV
A3	CS	1310A24127-0-MTR	B

SHEET 17 OF 45

CHANGE by Chang, Irene 7-Aug-2010

WWW.AliSaler.Com

APU

DISPLAY/CLK/MISC

WWW.AliSaler.Com

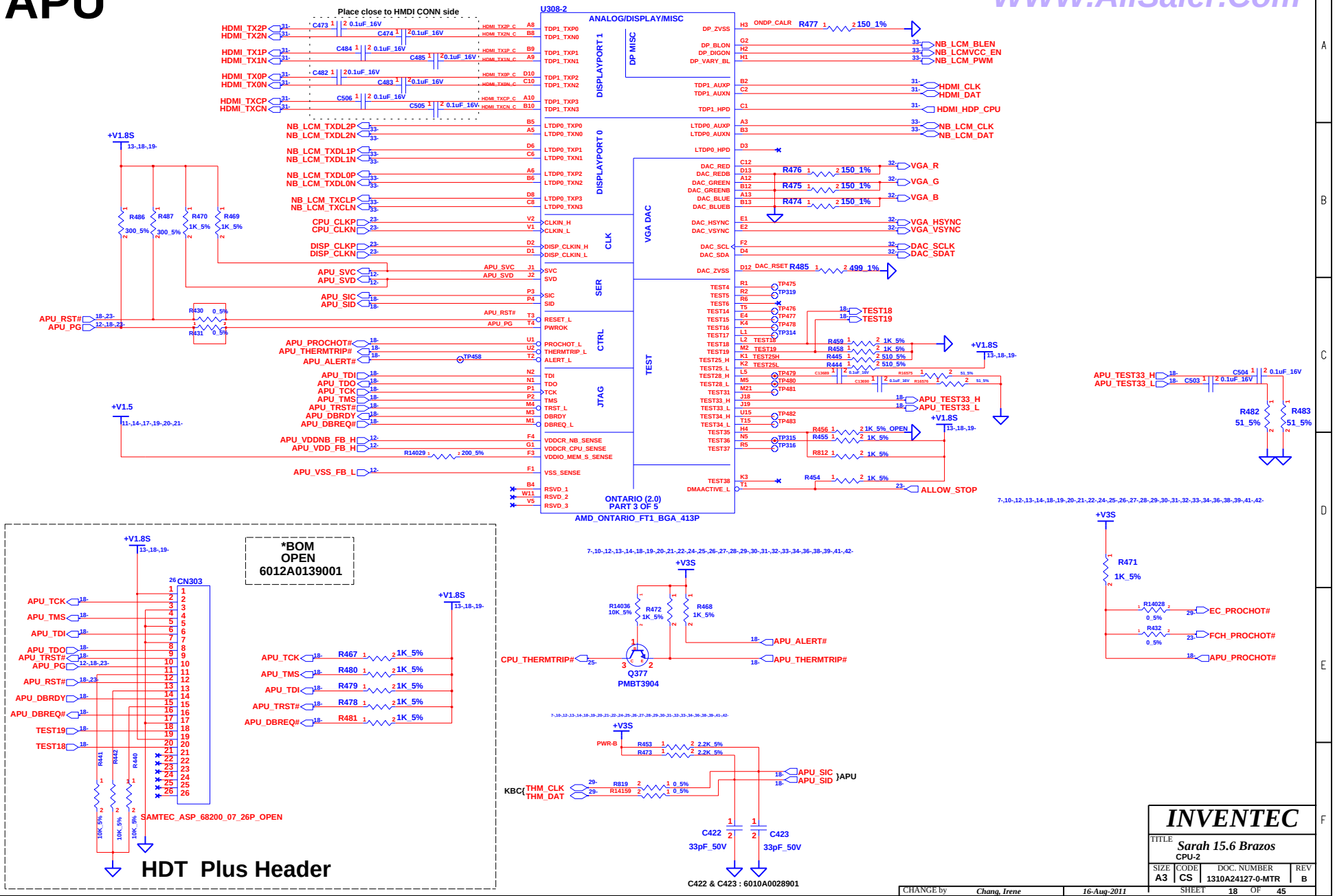

INVENTEC			
TITLE	Sarah 15.6 Brazos CPU-2		
SIZE A3	CODE CS	DOC. NUMBER 1310A24127-0-MTR	REV B
CHANGE by Chang, Irene	16-Aug-2011	SHEET 18 OF 45	

WWW.AliSaler.Com

WWW.AliSaler.Com

APU

POWER / GND

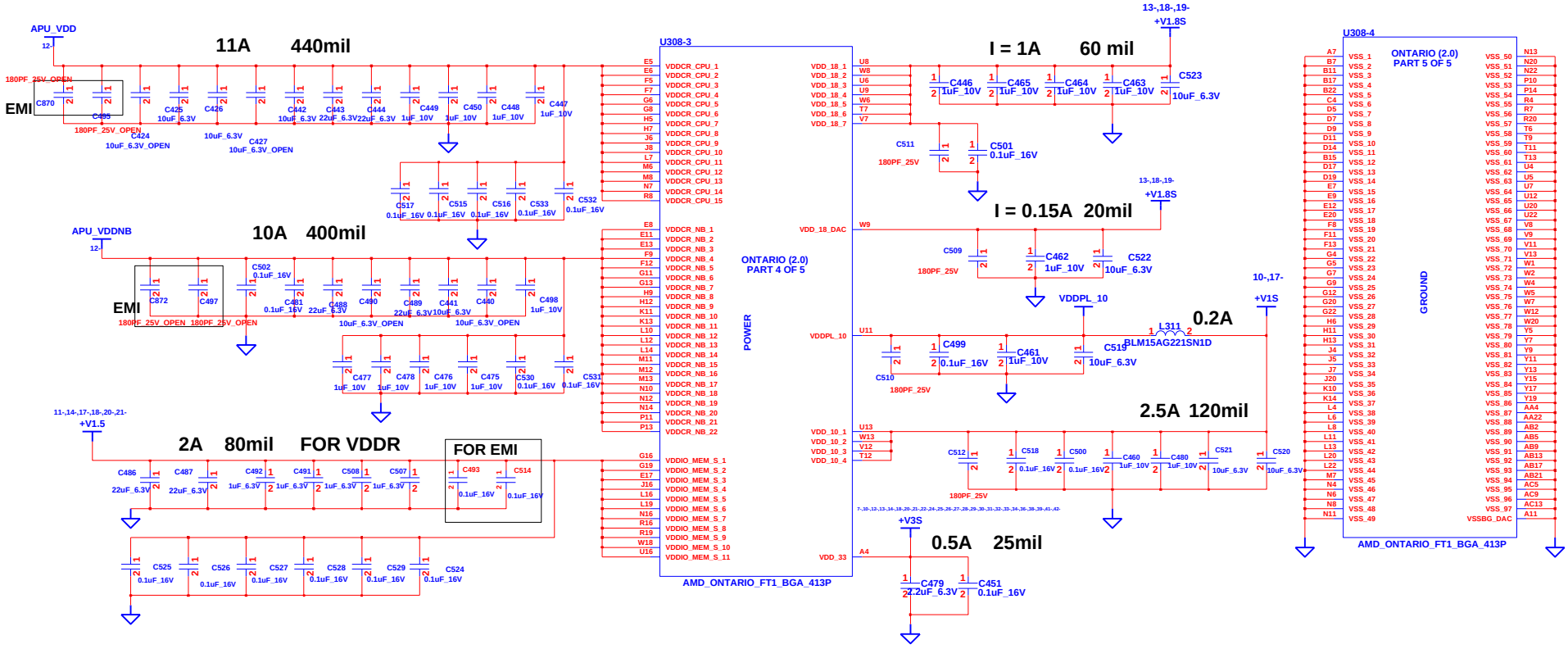

INVENTEC			
TITLE Sarah 15.6 Brazos CPU-4			
SIZE A3	CODE CS	DOC. NUMBER 1310A24127-0-MTR	REV B
CHANGE by Chang, Irene	7-Aug-2010	SHEET 19 OF 45	

WWW.AliSaler.Com

SO-DIMM0

WWW.AliSaler.Com

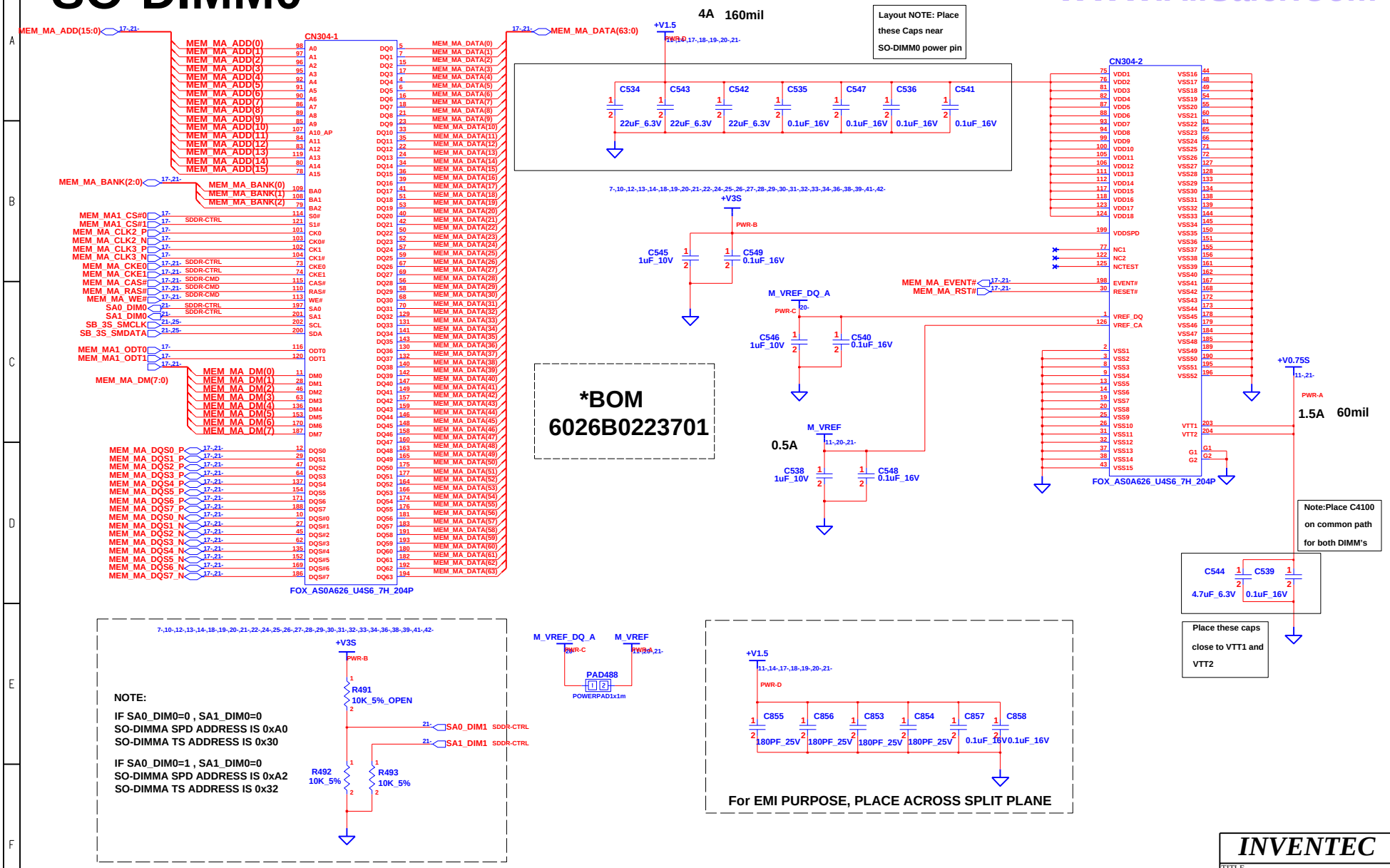

INVENTEC			
TITLE: Sarah 15.6 Brazos DDR3 DIMM0			
SIZE A3	CODE CS	DOC. NUMBER 1310A24127-0-MTR	REV B
CHANGE by Chang, Irene	14-Mar-2011	SHEET 20 OF 45	

WWW.AliSaler.Com

SO-DIMM1

WWW.AliSaler.Com

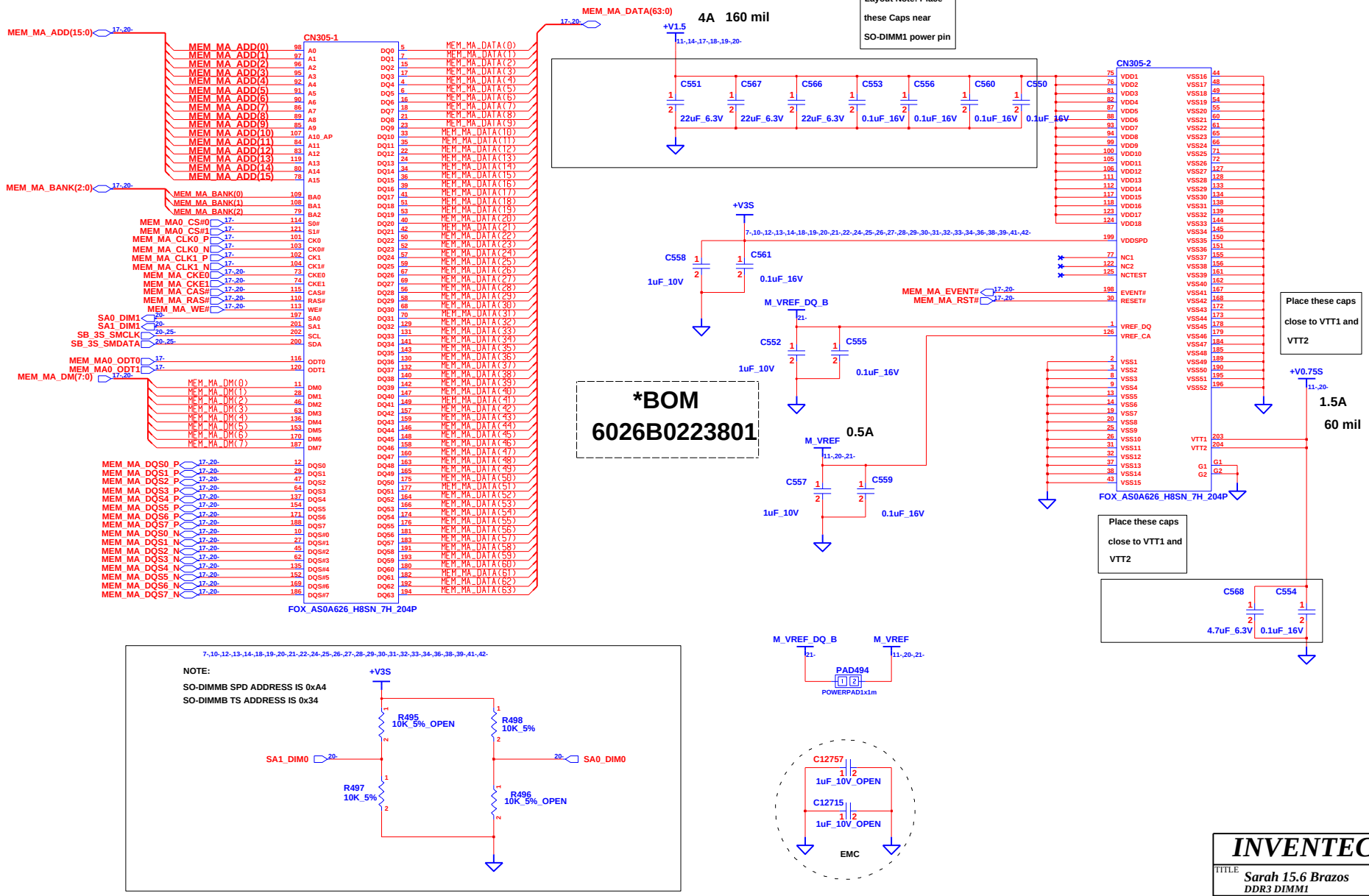

CHANGE by	Chang, Irene	23-Feb-2011	

INVENTEC

TITLE: *Sarah 15.6 Brazos*
DDR3 DIMM1

SIZE	CODE	DOC. NUMBER	REV
A3	CS	1310A24127-0-MTR	B

SHEET 21 OF 45

WWW.AliSaler.Com

WWW.AliSaler.Com

OK

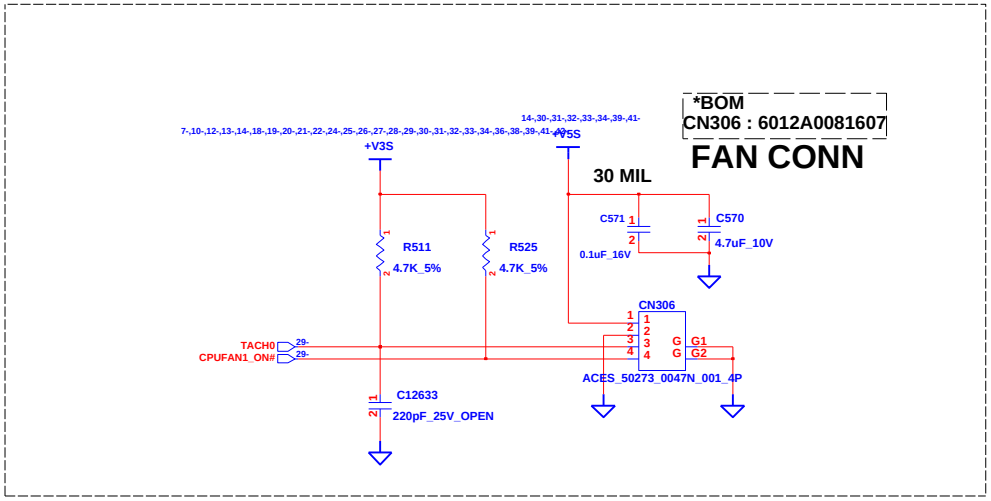

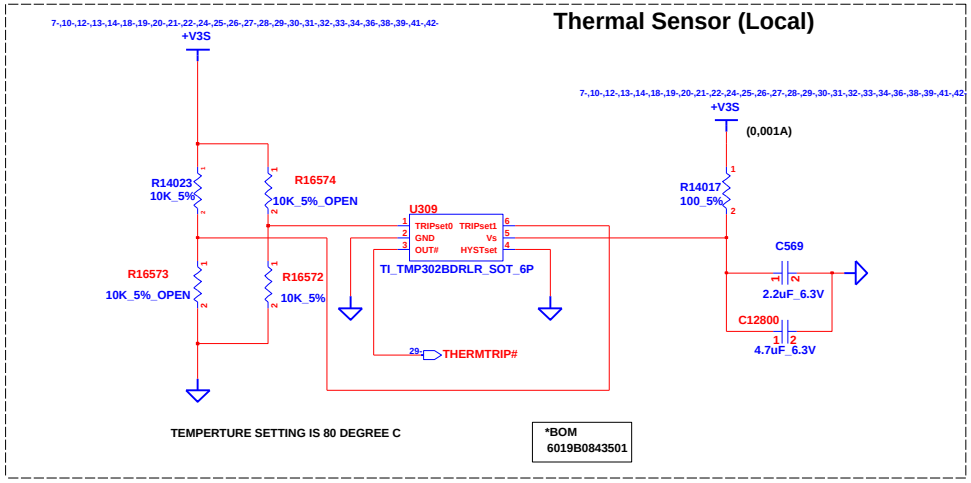

INVENTEC			
TITLE: Sarah 15.6 Brazos FAN & THERMAL			
SIZE: A3	CODE: CS	DOC. NUMBER: 1310A24127-0-MTR	REV: B
CHANGE by: Chang, Irene	13-Oct-2010	SHEET 22 OF 45	

WWW.AliSaler.Com

WWW.AliSaler.Com

FCH

U311-1 HUDSON-2 (Part 1 of 5)

PLACE THESE PCIE AC COPULING CAPS CLOSE TO U9770-1

UMI_FCH_APU_RX0P / RX0N / RX1P / RX1N / RX2P / RX2N / RX3P / RX3N
UMI_APU_FCH_TX0P / TX0N / TX1P / TX1N / TX2P / TX2N / TX3P / TX3N

PCIE_VDDR

PCIE_C_TXP_LAN / PCIE_C_TXN_LAN / PCIE_C_TXP_WL / PCIE_C_TXN_WL / PCIE_C_TXP_CR / PCIE_C_TXN_CR

PCIE_C_RXP_LAN / PCIE_C_RXN_LAN / PCIE_C_RXP_WL / PCIE_C_RXN_WL / PCIE_C_RXP_CR / PCIE_C_RXN_CR

WLAN
CardReader

+1.1V_CKVDD

NB_REF - 100MHZ: DISP_CLKP / DISP_CLKN
CPU - 100 MHZ: CPU_CLKP / CPU_CLKN
LAN - 100MHZ: PCIE_LAN_CLKP / PCIE_LAN_CLKN
WLAN - 100MHZ: PCIE_WLAN_CLKP / PCIE_WLAN_CLKN
CARDREADER - 100MHZ: PCIE_CR_CLKP / PCIE_CR_CLKN

FCH_25M_IN

AMD_218_0755042_A13_FCBGA_656P

PCI_CLK1 / PCI_CLK3 / PCI_CLK4

PCI_AD23 / PCI_AD24 / PCI_AD25 / PCI_AD26 / PCI_AD27

PCI_SERR#

LPC_CLK0 / LPC_CLK1 / LPC_AD(0) / LPC_AD(1) / LPC_AD(2) / LPC_AD(3) / LPC_FRAME# / SERIRQ

ALLOW_STOP / FCH_PROCHOT# / APU_PG / APU_RST#

Routed with 60-ohm +/- 15% impedance

RTC_CLK / +V_RTC

RTC_32K_IN

*BOM
X301: 6018B0044501
C577,C578:6010071502AT

*BOM
X805: 6018A0009301-004

M2 : 6019B0775601
M3 : 6019B0775602

INVENTEC			
TITLE: Sarah 15.6 Brazos FCH-1			
SIZE A3	CODE CS	DOC. NUMBER 1310A24127-0-MTR	REV B
CHANGE by Chang, Irene	29-Sep-2011	SHEET 23 OF 45	

WWW.AliSaler.Com

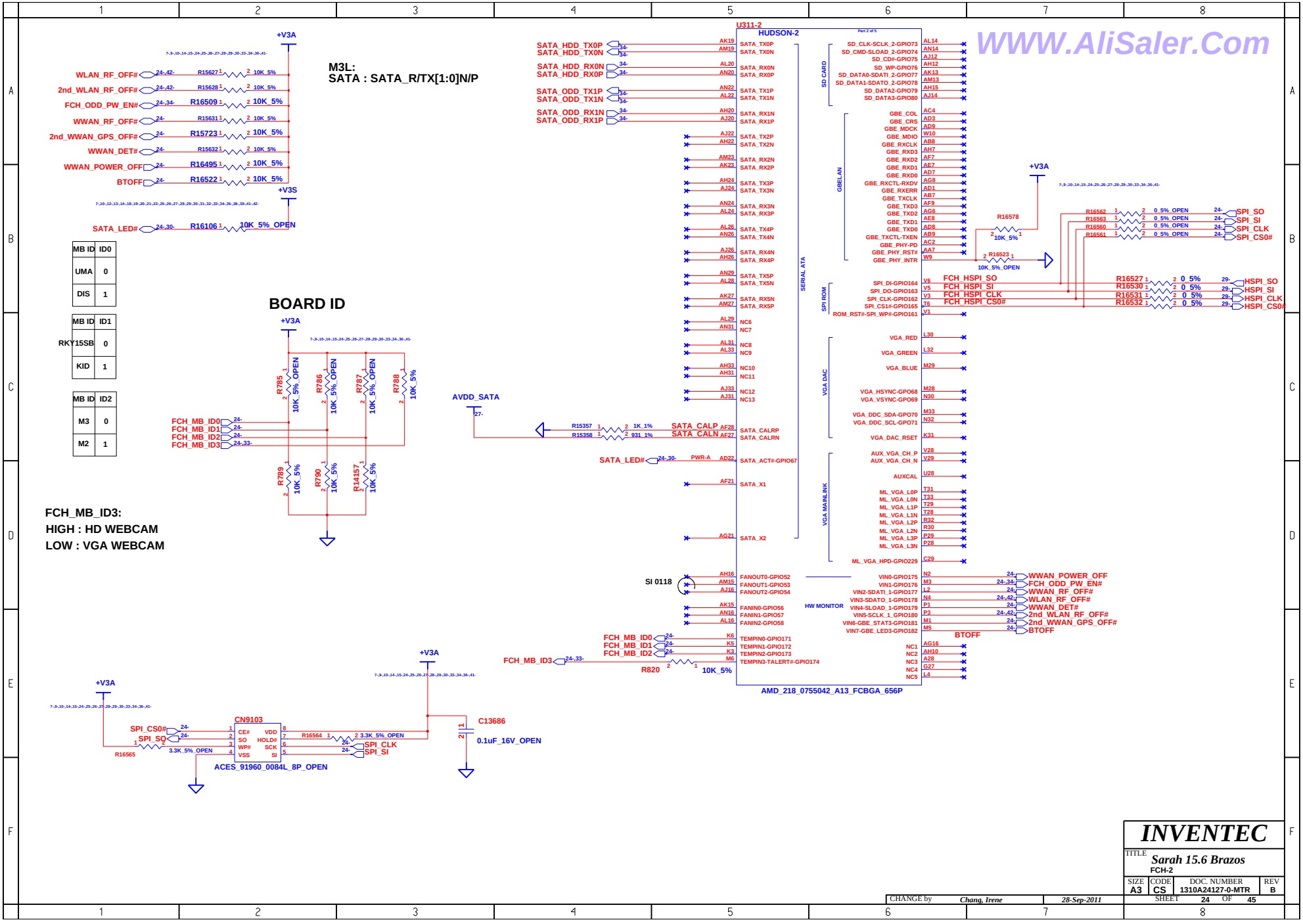

WWW.AliSaler.Com

WWW.AliSaler.Com

U311-4
HUDSON-2

M3L:
USB2.0 : USB_HSD[3:0], 8:5, 11:10]N/P
USB3.0 : USB_SS_T/RX[1:0]N/P

USB 3.0 (LEFT SIDE)

WLAN
WEBCAM

USB2.0 (LEFT SIDE)
USB 2.0 CONN (RIGHT SIDE)
USB 2.0 CONN (RIGHT SIDE)

USB DEBUG PORT

ONLY

USB 3.0 (LEFT SIDE)

R15716 & R15717 USB3.0 ONLY

AMD_218_0755042_A13_FCBGA_656P

INVENTEC	
TITLE	Sarah 15.6 Brazos FCH-3
SIZE A3 / CODE CS	DOC. NUMBER 1310A24127-0-MTR / REV B
CHANGE by Chang, Irene	28-Sep-2011
SHEET 25 OF 45	

WWW.AliSaler.Com

WWW.AliSaler.Com

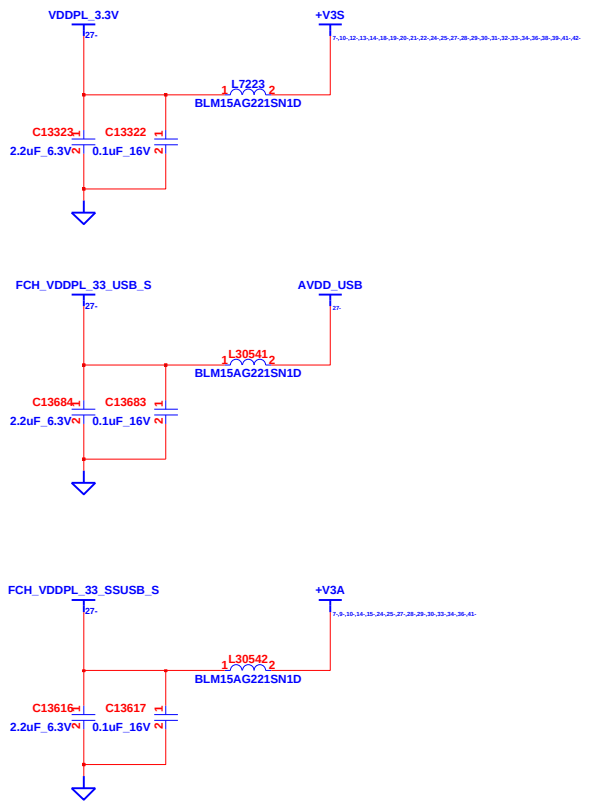

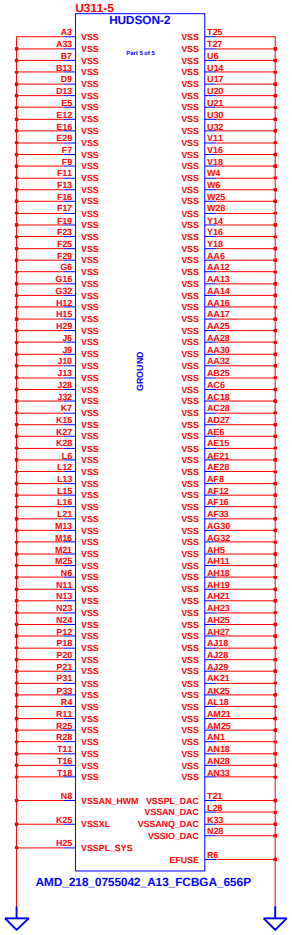

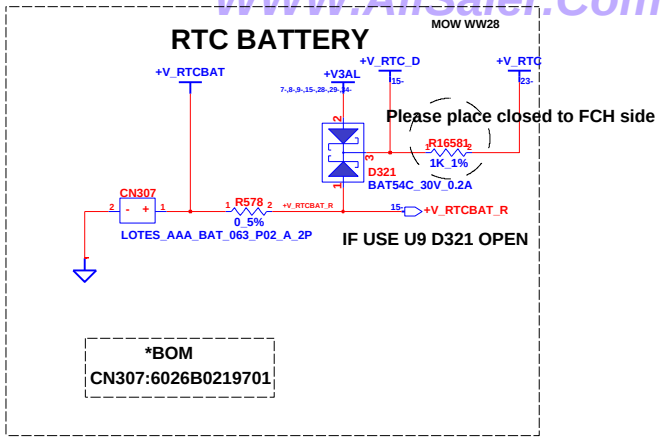

CHANGE by	Chang, Irene	28-Sep-2011	

INVENTEC

TITLE: *Sarah 15.6 Brazos*
FCH-4

SIZE	CODE	DOC. NUMBER	REV
A3	CS	1310A24127-0-MTR	B

SHEET 26 OF 45

WWW.AliSaler.Com

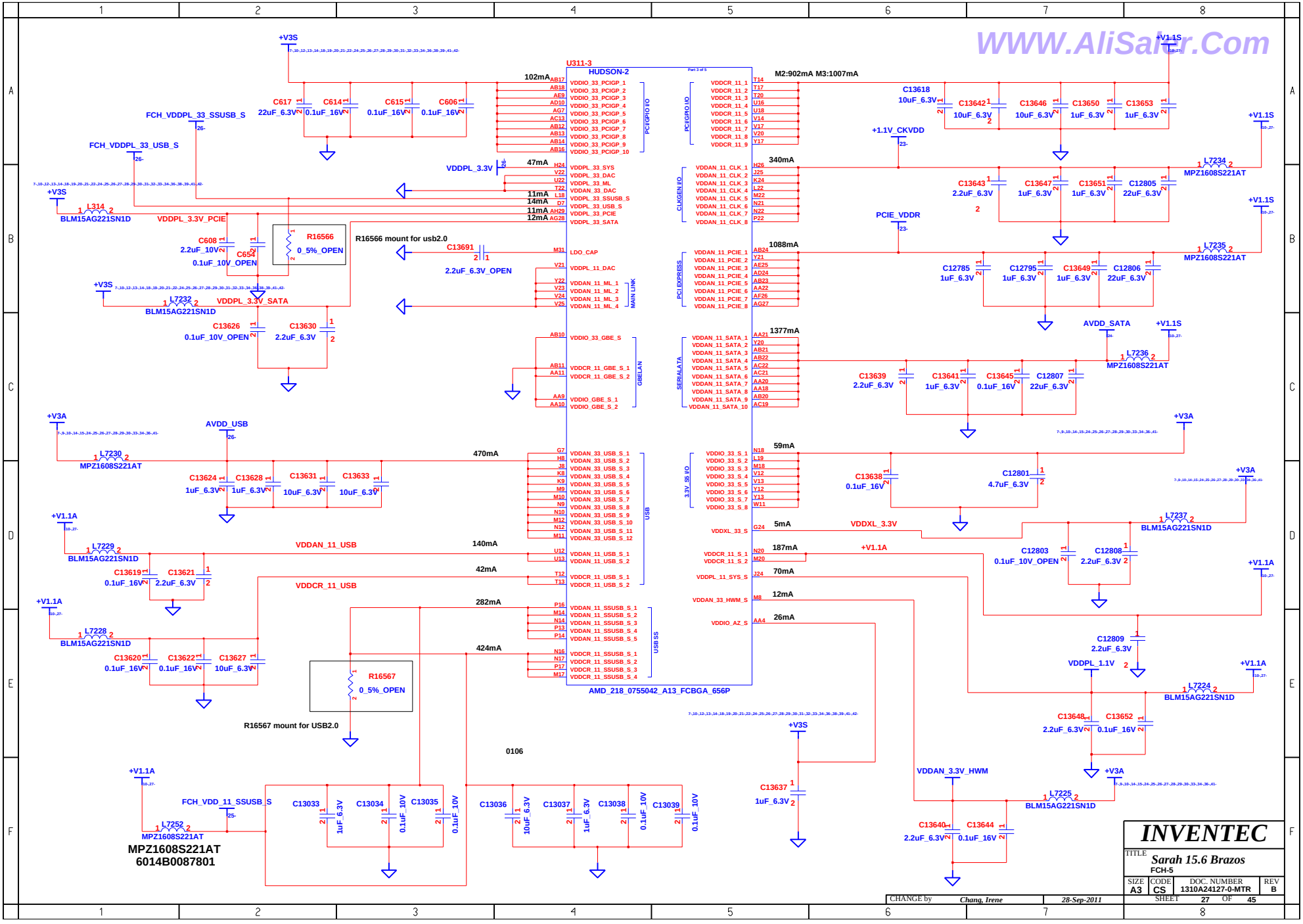

WWW.AliSaler.Com

WWW.AliSaler.Com

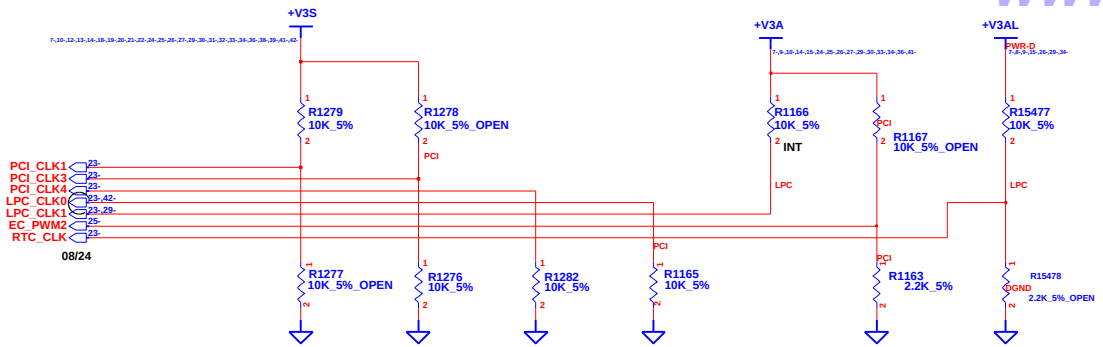

Required Straps:

RTCCLK		PCI_CLK1	PCI_CLK3	PCI_CLK4	LPC_CLK0	LPC_CLK1	EC_PWM2
S5 PLUS MODE DISABLE (DEFAULT)	PULL HIGH	ALLOW PCIE Gen2 DEFAULT	USE DEBUG STRAP	non Fusion CLOCK MODE APU_CLK AND DISP_CLK NO CLOCK OUTPUT	EC ENABLED	INTEGRATED CLKGEN ENABLED DEFAULT	LPC ROM
S5 PLUS MODE ENABLE	PULL LOW	FORCE PCIE Gen1	IGNORE DEBUG STRAPE DEFULT	Fusion CLOCK MODE DEFULT APU_CLK AND DISP_CLK CLOCK OUTPUT FROM INT CLOCK GEN	EC DISABLED DEFAULT	INTEGRATED CLKGEN DISABLED	SPI ROM DEFAULT

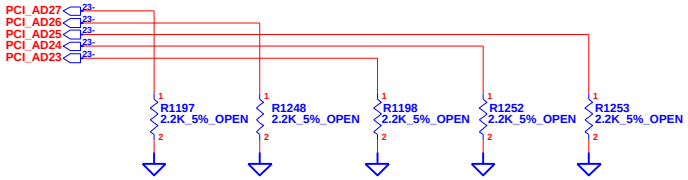

Debug Straps

FCH HAS 15K INTERNAL PU FOR PCI_AD[27:23]

	PCI_AD27	PCI_AD26	PCI_AD25	PCI_AD24	PCI_AD23
PULL HIGH	USE PCI PLL (default)	DISABLE ILA AUTORUN (default)	USE FC PLL (default)	USE DEFAULT PCIE STRAPS (default)	DISABLE PCI MEM BOOT (default)
PULL LOW	BYPASS PCI PLL	ENABLE ILA AUTORUN	BYPASS FC PCI PLL	USE EEPROM PCIE STRAPS	ENABLE PCI MEM BOOT

INVENTEC

TITLE KF14BR-SCHE-DB-20110928-M3L

SIZE	CODE	DOC. NUMBER	REV
A3	CS		

CHANGE by KF14BR 28-Sep-2011 SHEET 28 OF 45

WWW.AliSaler.Com

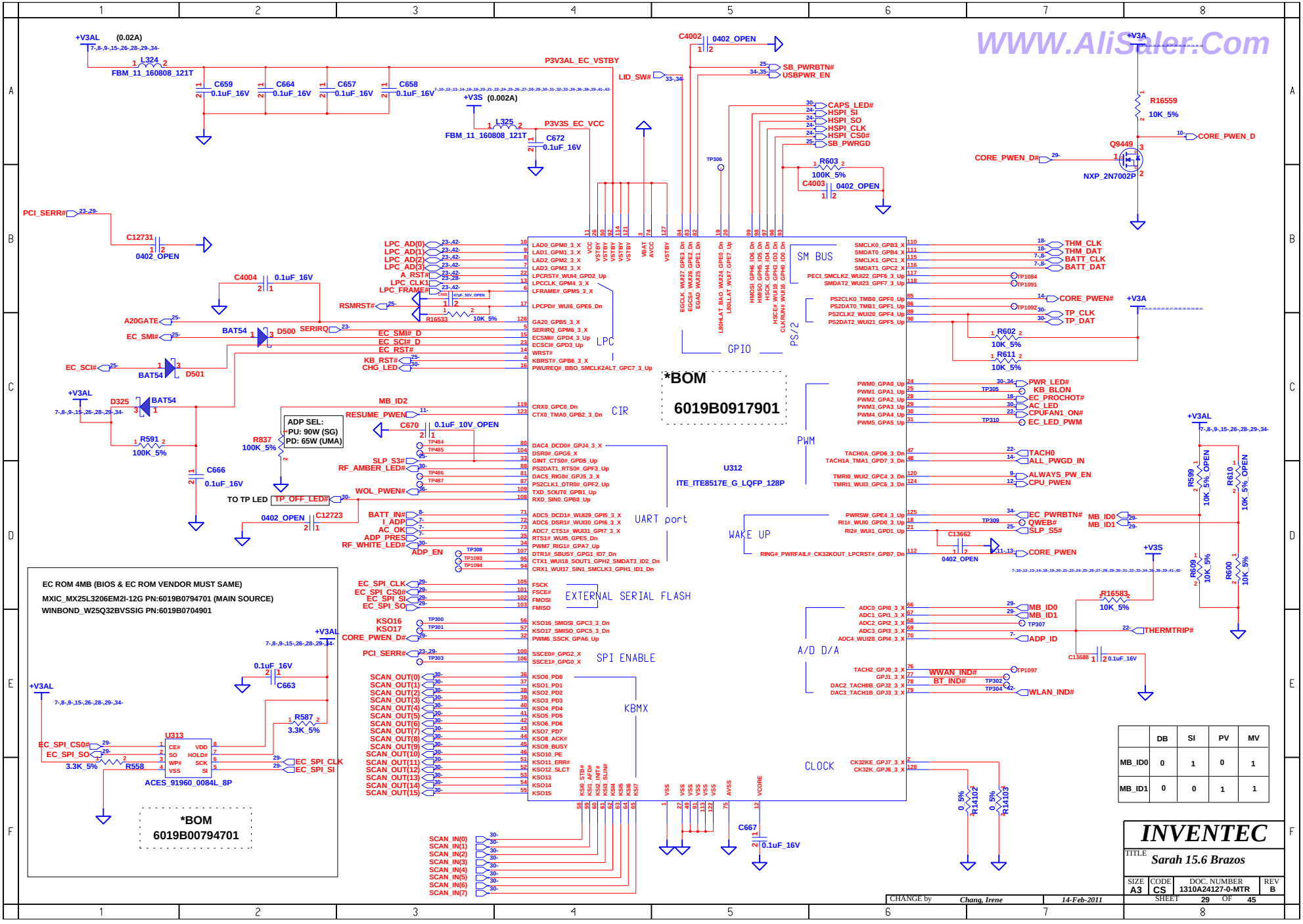

	DB	SI	PV	MV
MB_ID0	0	1	0	1
MB_ID1	0	0	1	1

WWW.AliSaler.Com

WWW.AliSaler.Com

TouchPad Module CONN

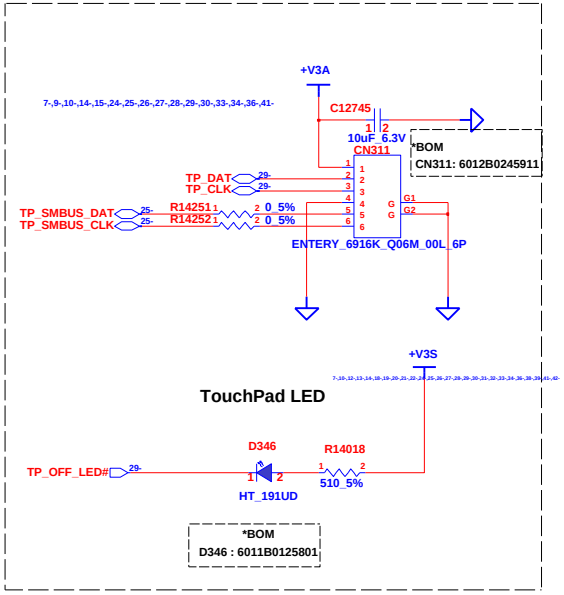

OK

DC-JACK LED

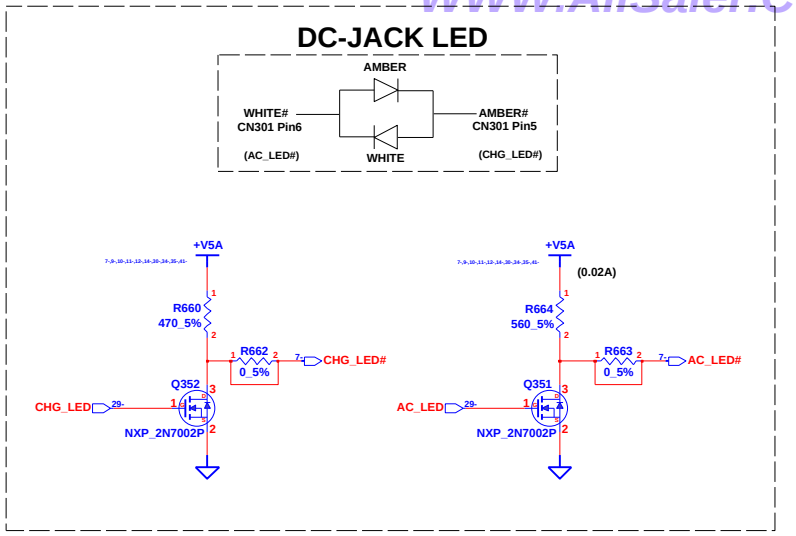

KeyBoard CONN (30 pin)

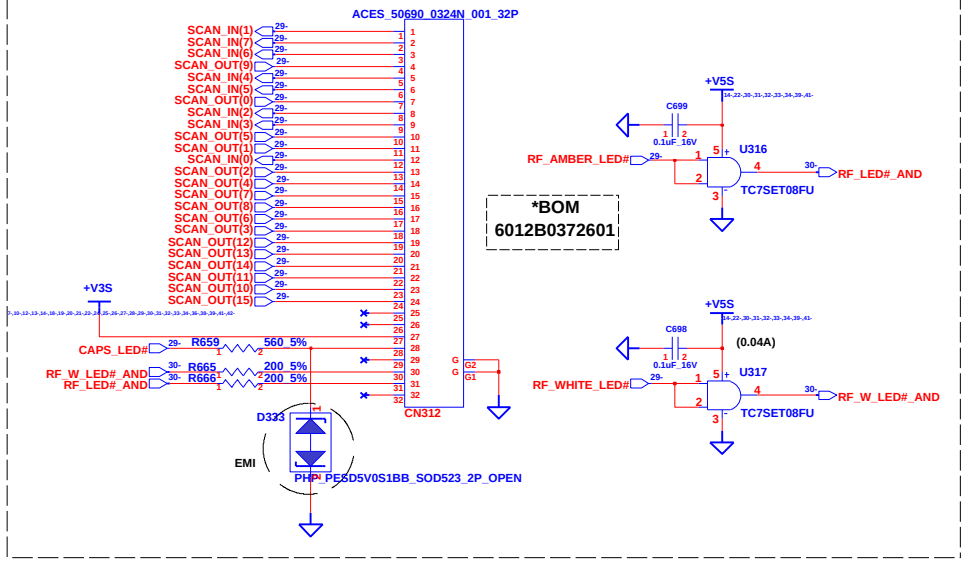

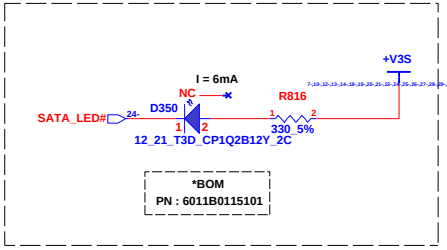

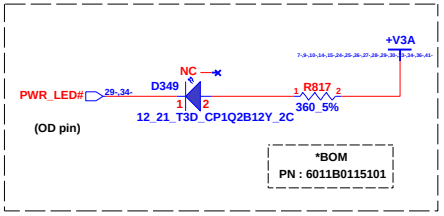

CHANGE by	Chang, Irene	7-Aug-2010	

INVENTEC

TITLE: *Sarah 15.6 Brazos*
KBC

SIZE	CODE	DOC. NUMBER	REV
A3	CS	1310A24127-0-MTR	B

SHEET 30 OF 45

WWW.AliSaler.Com

WWW.AliSaler.Com

OK

HDMI

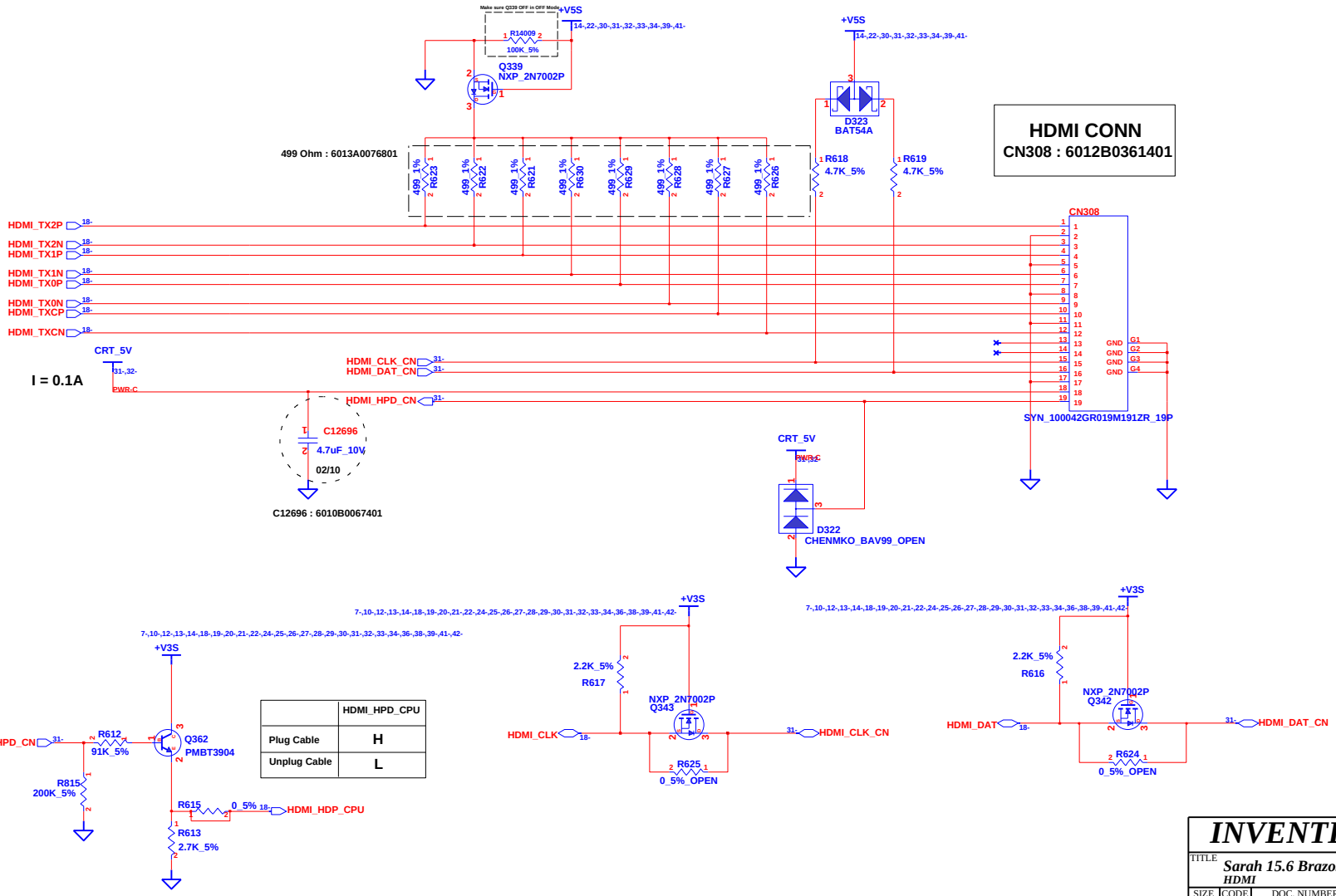

	HDMI_HPD_CPU
Plug Cable	H
Unplug Cable	L

	HDMI_HPD_CN
Plug Cable	H
Unplug Cable	L

INVENTEC

TITLE: Sarah 15.6 Brazos
HDMI

SIZE	CODE	DOC. NUMBER	REV
A3	CS	1310A24127-0-MTR	B

SHEET 31 OF 45

CHANGE by Chang, Irene 31-Aug-2010

WWW.AliSaler.Com

WWW.AliSaler.Com

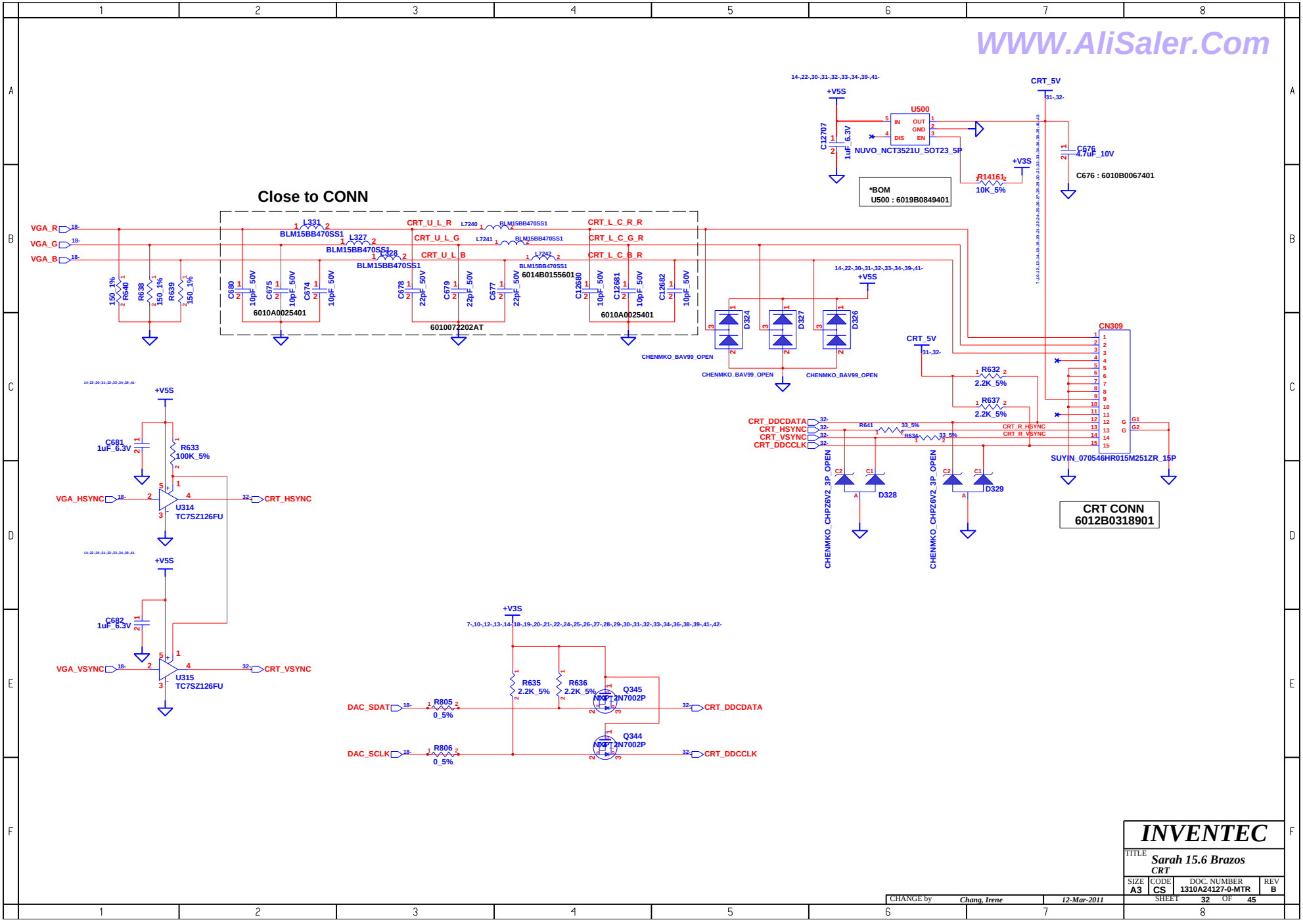

INVENTEC			
TITLE: Sarah 15.6 Brazos CRT			
SIZE A3	CODE CS	DOC. NUMBER 1310A24127-0-MTR	REV B
CHANGE by Chang, Irene	12-Mar-2011	SHEET 32 OF 45	

WWW.AliSaler.Com

WWW.AliSaler.Com

LCM

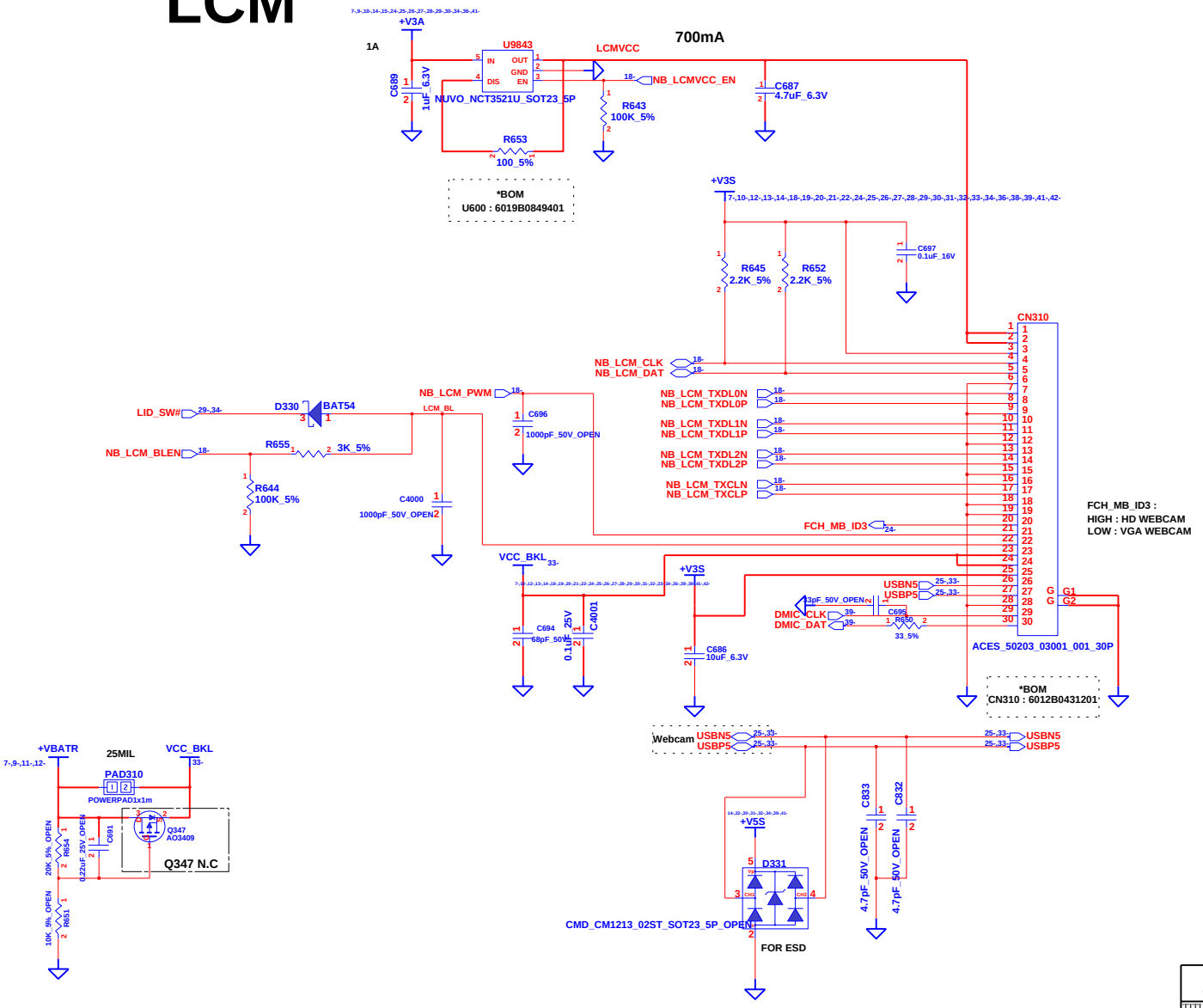

INVENTEC			
TITLE: *Sarah 15.6 Brazos* — *LCM CONN*			
SIZE: A3	CODE: CS	DOC. NUMBER: 1310A24127-0-MTR	REV: B
CHANGE by: *Chang, Irene*	*31-Aug-2010*	SHEET 33 OF 45	

WWW.AliSaler.Com

WWW.AliSaler.Com

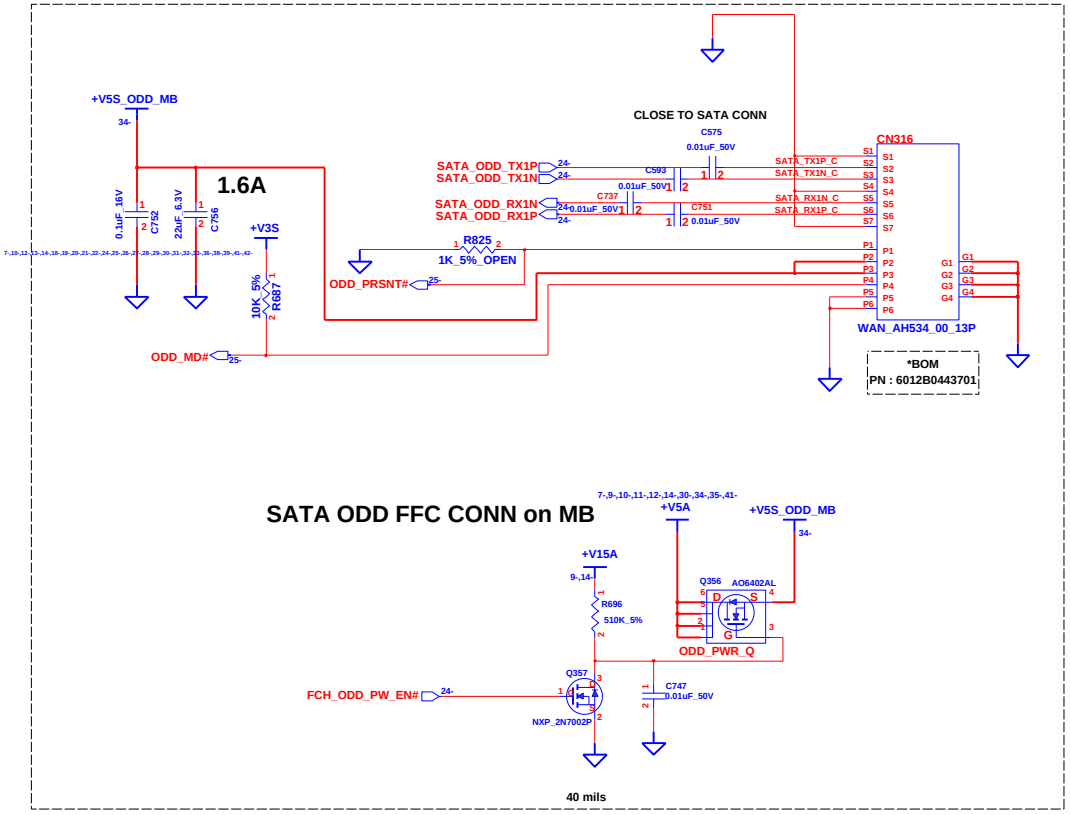

SATA ODD FFC CONN on MB

SATA HDD FFC CONN on MB

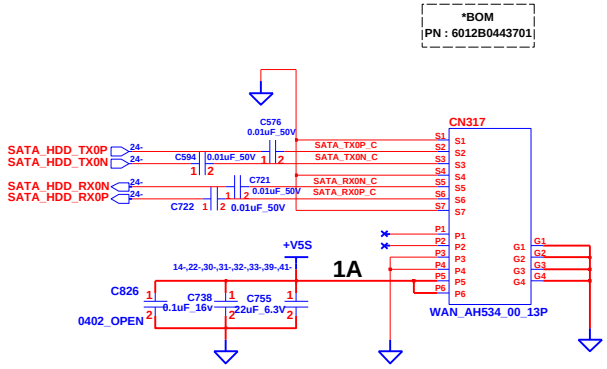

PBN Cable CN on MB

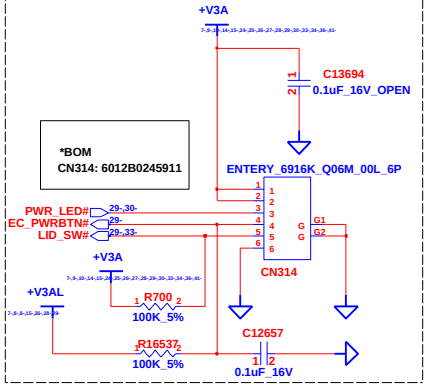

USB BOARD Cable on MB

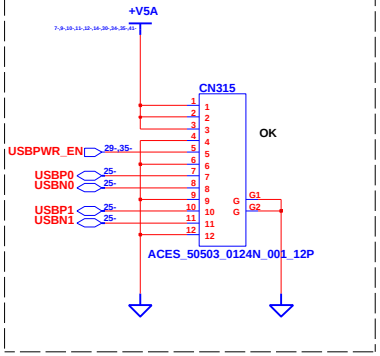

*BOM
CN315: 6012B0245913

INVENTEC			
TITLE: Sarah 15.6 Brazos KB CONN & TP CONN & Indicate LED			
SIZE A3	CODE CS	DOC. NUMBER 1310A24127-0-MTR	REV B
CHANGE by Chang, Irene	24-Dec-2010	SHEET 34 OF 45	

WWW.AliSaler.Com

WWW.AliSaler.Com

USB3.0_PORT

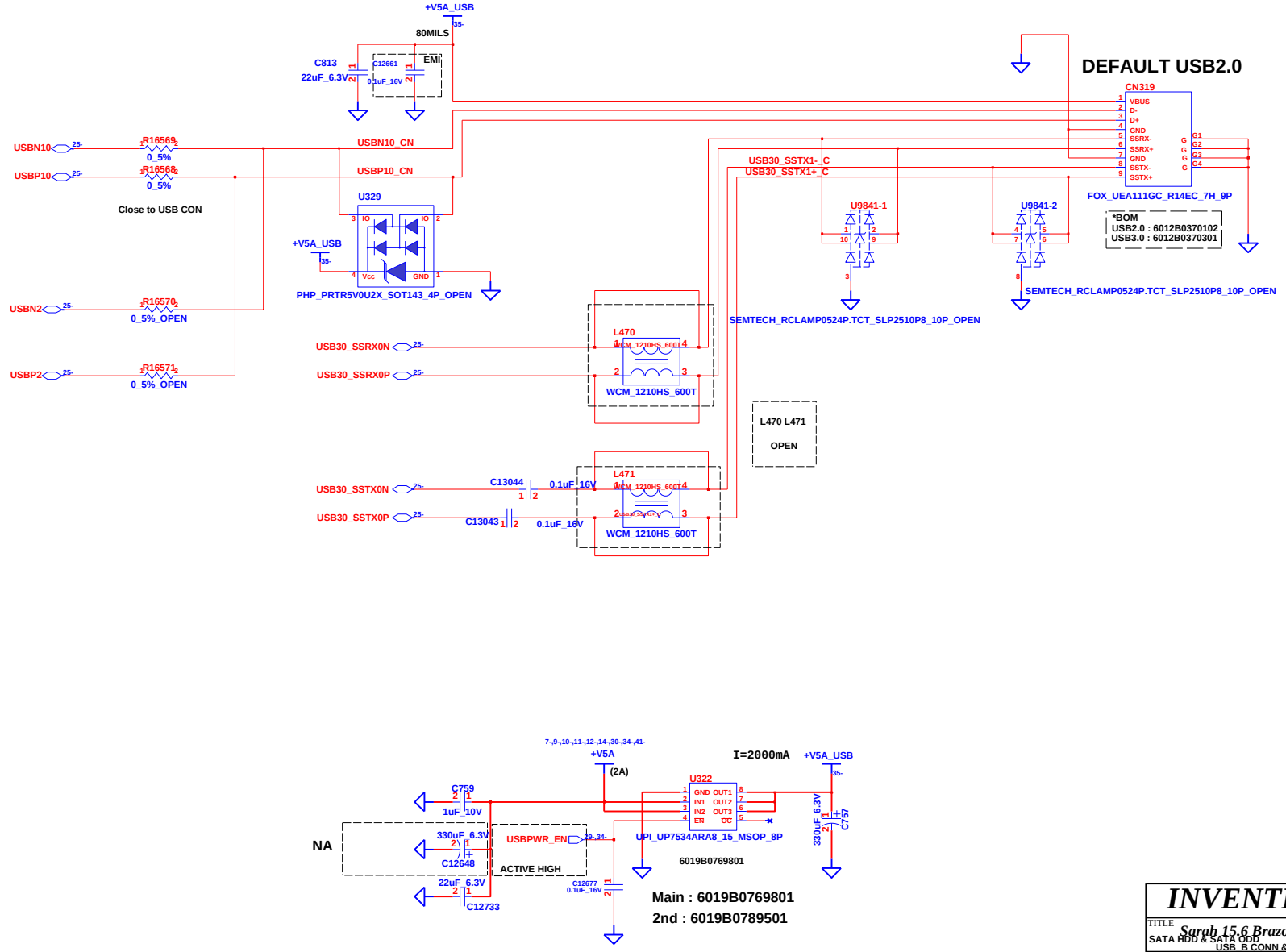

INVENTEC			
TITLE: Sarah 15.6 Brazos SATA HDD & SATA ODD USB_B CONN & PBN CONN			
SIZE: A3	CODE: CS	DOC. NUMBER: 1310A24127-0-MTR	REV: B
CHANGE by: Chang, Irene	6-Apr-2011	SHEET 35 OF 45	

WWW.AliSaler.Com

WWW.AliSaler.Com

RTL8161FH(10/100/1000)/RTL8165EH(10/100)		
	MOUNT	OPEN
10/100 LAN LDO MODE DEFAULT	U320,R680,U9848	L332,R14143,R672,C741,C713 C12754,C12756,C12734,C12735 C12736,C12737,U470,R14131 R14141
GIGA LAN SWITCHING MODE	L332,R14143,R672,C741,C713 C12754,C12756,C12734,C12735 C12736,C12737,R14131 U320,U470,R14141	R680,U9848

C535 to C11172 are for +V3_LAN pins-12, 27, 39, 42, 47, 48
THE +V3_LAN HAVE TO SATISFY 1mS< RISING TIME (10%~90%) <100mS

R14031 200_5%_OPEN
Q376 2N7002_OPEN
+V3A
DIODES_DMP2305U_SOT23_3P
Q354
WOL_PWEN#
R681 750K_1%
C727 0.1uF_16V
+V3_LAN

C12756,C12734,C12735,C12736,C12737,C713: 6010A0036403
pin12 C12725 0.1uF_16V
pin27 C12752 0.1uF_16V
pin39 C12753 0.1uF_16V
pin42 C12755 0.1uF_16V
pin47 C12729 0.1uF_16V
pin48 C12730 0.1uF_16V
Placed near LAN Controller

XTAL2 C724 27pF_50V
*BOM 6018B0044501
X394 25MHz
XTAL1 C723 27pF_50V

CHANGE
*BOM
L332
1ST: 6014B0200401
2ND: 6014B0190301

AVDD33_REG
R14143: 60130B00000Z
R14143 0_5%_OPEN
Placed near LAN Controller

REGOUT
L332 SWF2520CF_2R2M_R15
C12754: 6010B0009904 (4.7uF_6.3V_X5R)
C12754 4.7uF_6.3V_OPEN
C12756: 6010A0036403
C12756 0.1uF_16V_OPEN
C741: 6010B0009904 (4.7uF_6.3V_X5R)
C741 4.7uF_6.3V_OPEN
C713: 6010A0036403
C713 0.1uF_16V_OPEN
NA

LDO MODE (RTL8165EH)
L332, C741, C713 OPEN

MOUNT R672, OPEN R680
ENABLE SWITICHING REGULATOR
MOUNT R680, OPEN R672
DISABLE SWITICHING REGULATOR
MOUNT R680, OPEN R672
ENABLE LDO REGULATOR
((ONLY 10/100))

R672: 60130B0000ZT
R672 0_5%_OPEN
R680 0_5%

USE RTL8161FH
C12734,C12735,C12736,C12737 MOUNT
C10627 to C11162 are for VDD10 pins-3, 6, 9, 13, 29, 41, 45
pin3 C12734 0.1uF_16V
pin6 C12735 0.1uF_16V
pin9 C12736 0.1uF_16V
pin41 C12737 0.1uF_16V
pin13 C12738 0.1uF_16V
pin29 C12739 0.1uF_16V
pin45 C12740 0.1uF_16V
Placed near LAN Controller

PAD9416 POWERPAD1x1m

EVDD10
pin21 C12741 1uF_16V
C1060 0.1uF_16v
Placed near LAN Controller
C12741, C1060 CLOSE TO RTL8165EH PIN21

+V3_LAN VDD10 LED_LANRXACT# GPO_SMBALERT LED_LANLINK#
LAN_25M_IN R14130 0_5%_OPEN
XTAL1 XTAL2
REGOUT AVDD33_REG
LAN_TRD0_DP LAN_TRD0_DN LAN_TRD1_DP LAN_TRD1_DN LAN_TRD2_DP LAN_TRD2_DN LAN_TRD3_DP LAN_TRD3_DN
U320
*BOM 6019B0928301
EEDI_SDA R669 10K_5%
EECS_SCL R676 10K_5%
PCIE_WAKE#
APU_PCIE_RST#
+V3S R673 1K_1% R653 15K_1%
REA_RTL8165EH_VB_CGT_QFN_48P
TP1086
R14131 10K_5%_OPEN
CLKREQ_LAN# PCIE_C_TXP_LAN PCIE_C_TXN_LAN PCIE_LAN_CLKP PCIE_LAN_CLKN PCIE_C_RXP_LAN PCIE_C_RXN_LAN
C701 0.1uF_16V PCIE_RXP_LAN
C708 0.1uF_16V PCIE_RXN_LAN
C12717,C12718 CLOSE TO LAN CHIP PIN 22,23
GPO_SMBALERT R14141 1K_1%_OPEN

RTL8161FH = 6019B0928101 (10/100/1000)
RTL8165EH = 6019B0928301 (10/100)
ADD COMMENT ON PAGE1 ABOUT 10/100 AND GIGA DIFFERENCE

RTL8165EH (10/100)	3.3V:ENABLE SWITCHING REGULATOR OR EXTERNAL 1.05 INPUT MODE 0V:ENABLE LDO REGULATOR
RTL8161FH (10/100/1000)	3.3V: ENABLE SWITCHING REGULATOR 0V: DISABLE SWITCHING REGULATOR

CHANGE by Chang, Irene 7-Aug-2010

INVENTEC
TITLE Sarah 15.6 Brazos USB
SIZE A3 | CODE CS | DOC. NUMBER 1310A24127-0-MTR | REV B
SHEET 36 OF 45

WWW.AliSaler.Com

WWW.AliSaler.Com

U470 FOR GIGALAN
U9848 FOR 10/100 LAN

*** BOM**

U470 : 6016B0010601

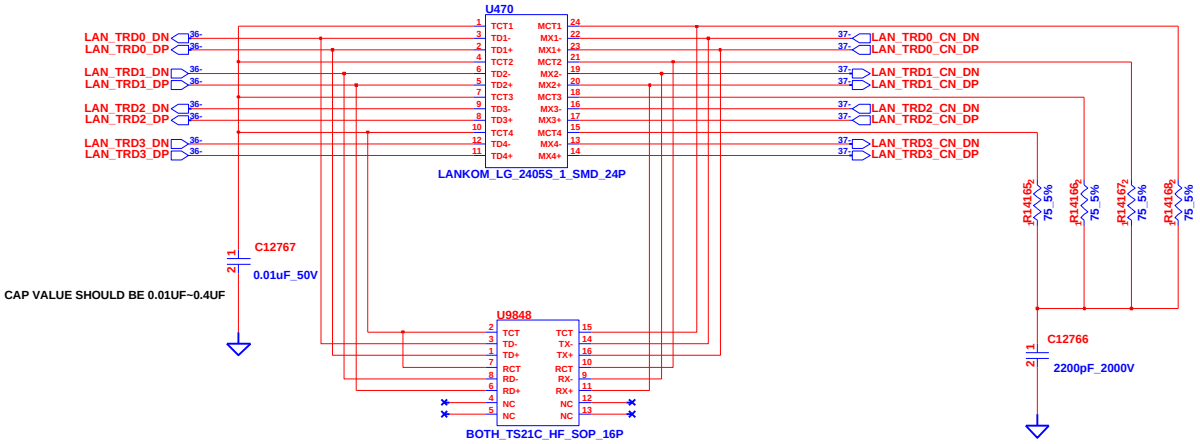

*** BOM**

U9848 : 6016B0008001

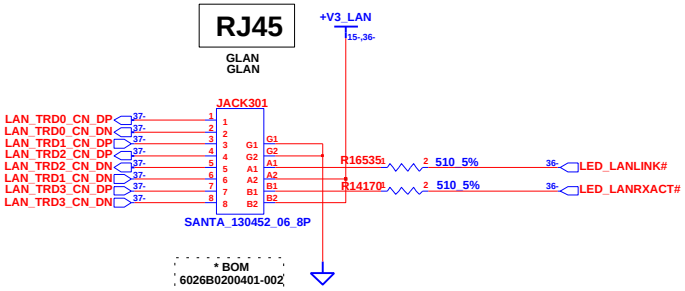

*** BOM**

6026B0200401-002

LAYOUT NOTE : Place termination resistors and caps as close to LAN controller as possible

INVENTEC			
TITLE: Sarah 15.6 Brazos RTL8165EH			
SIZE: A3	CODE: CS	DOC. NUMBER: 1310A24127-0-MTR	REV: B
CHANGE by: Chang, Irene	3-Oct-2011	SHEET 37 OF 45	

WWW.AliSaler.Com

WWW.AliSaler.Com

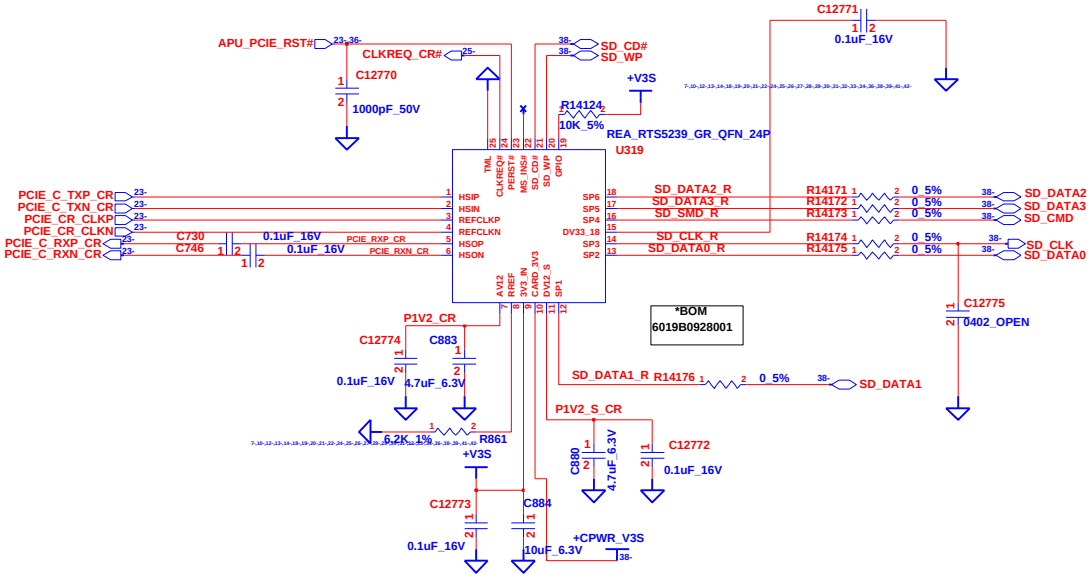

Card Reader CONN

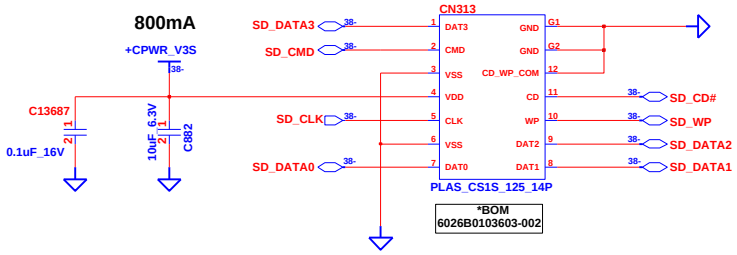

INVENTEC			
TITLE *Sarah 15.6 Brazos* *LAN & RJ45 CONN*			
SIZE A3	CODE CS	DOC. NUMBER 1310A24127-0-MTR	REV B
CHANGE by *Chang, Irene*	*7-Aug-2010*	SHEET 38 OF 45	

WWW.AliSaler.Com

WWW.AliSaler.Com

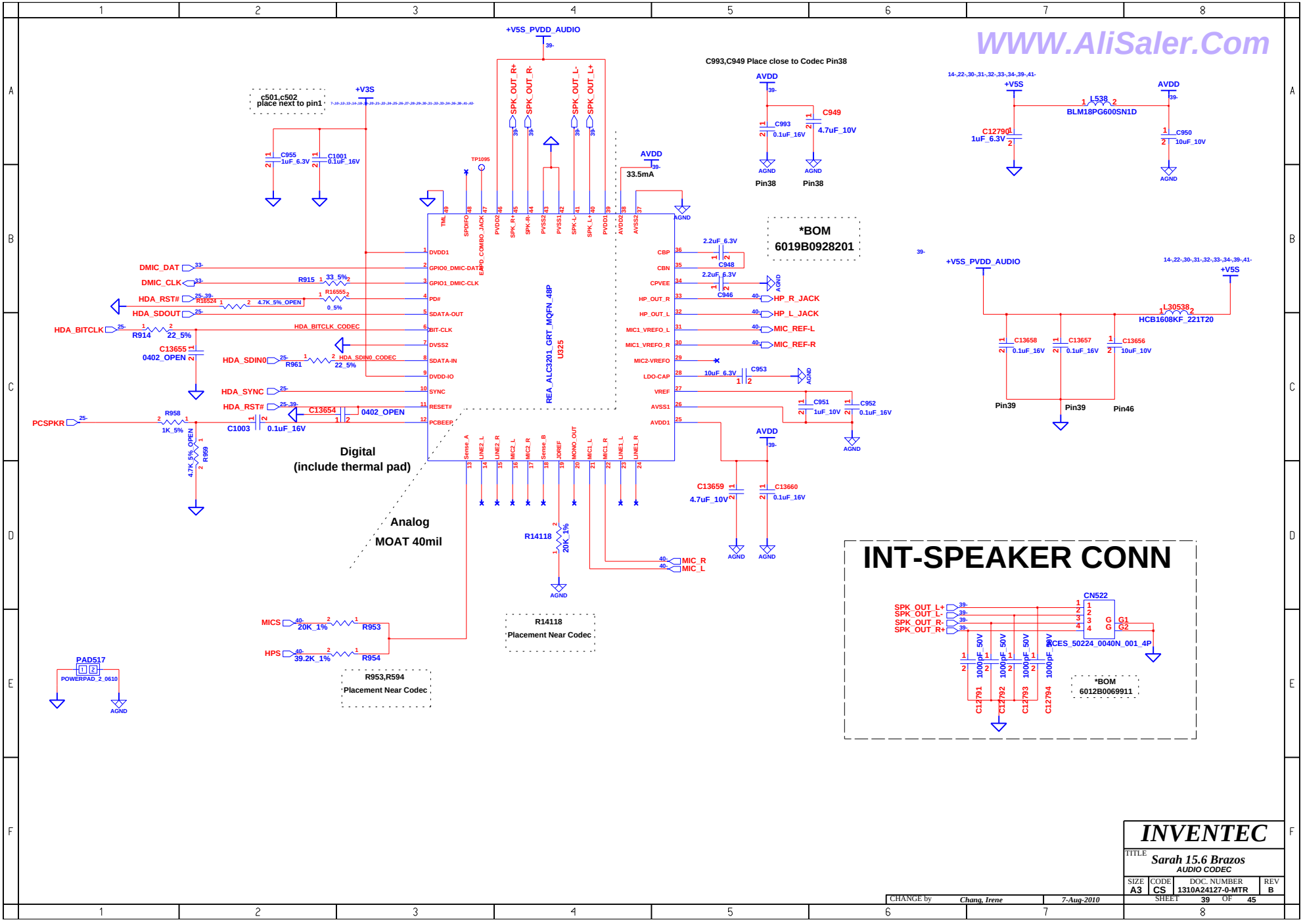

CHANGE by	Chang, Irene	7-Aug-2010	

INVENTEC

TITLE: *Sarah 15.6 Brazos*
AUDIO CODEC

SIZE	CODE	DOC. NUMBER	REV
A3	CS	1310A24127-0-MTR	B

SHEET 39 OF 45

WWW.AliSaler.Com

WWW.AliSaler.Com

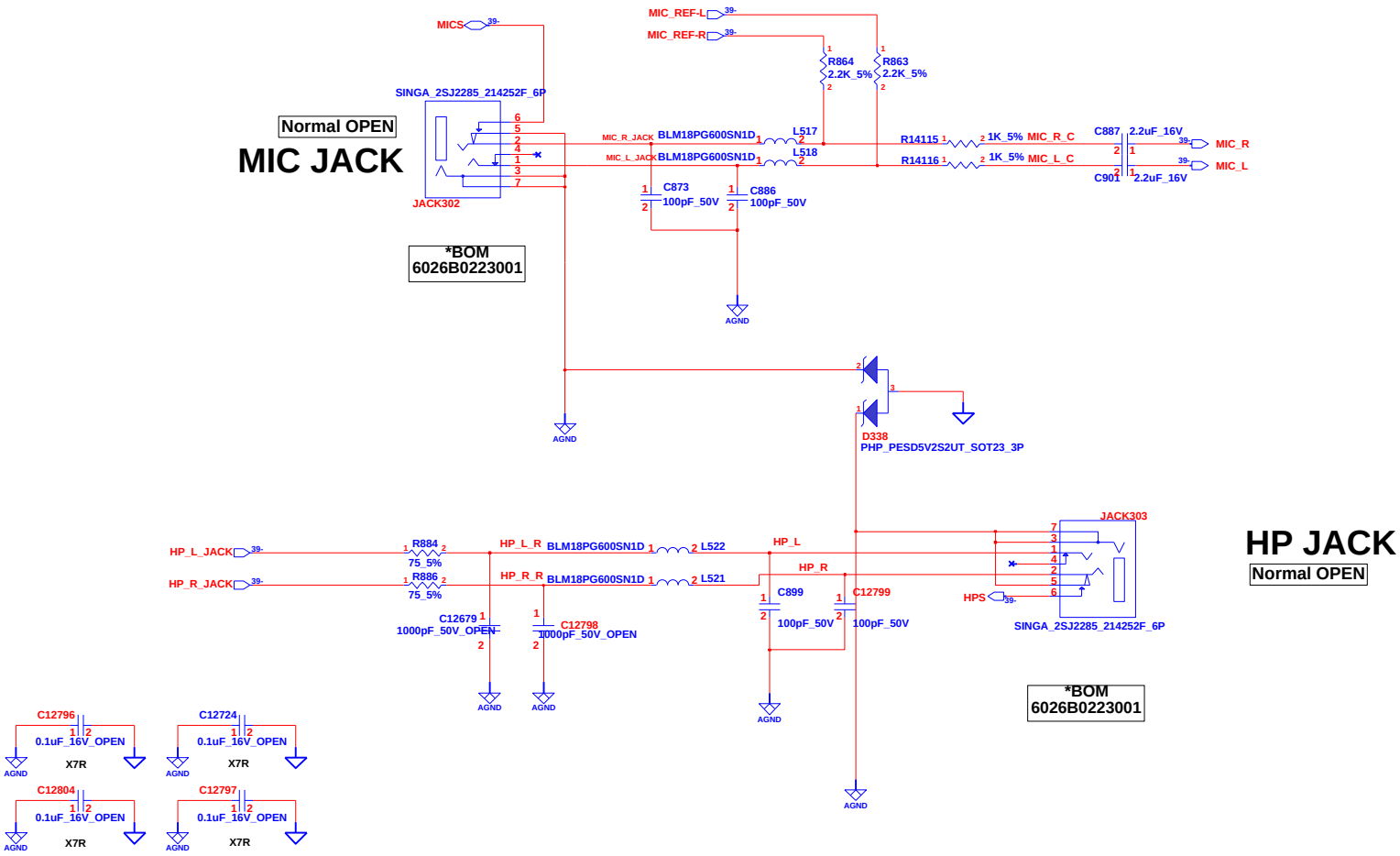

INVENTEC			
TITLE: Sarah 15.6 Brazos — AUDIO JACK			
SIZE: A3	CODE: CS	DOC. NUMBER: 1310A24127-0-MTR	REV: B
CHANGE by: Chang, Irene	7-Aug-2010	SHEET 40 OF 45	

WWW.AliSaler.Com

WWW.AliSaler.Com

For APU

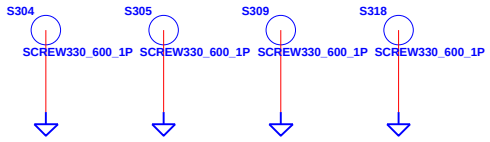

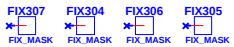

For EMI CAP

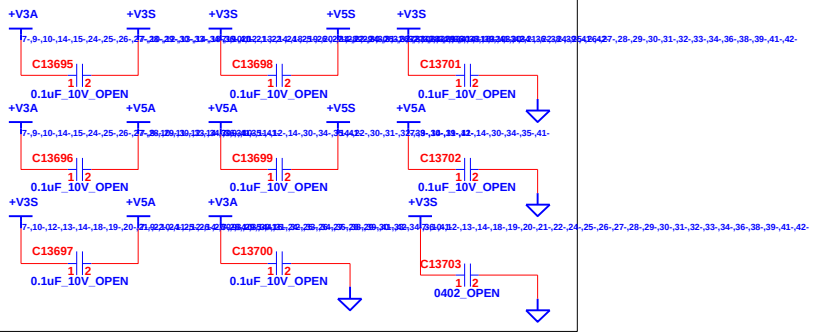

For MB

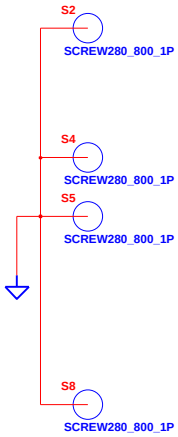

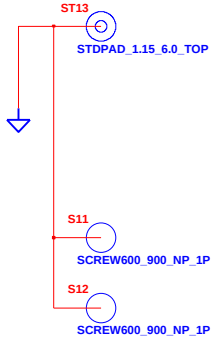

INVENTEC			
TITLE Sarah 15.6 Brazos			
SIZE A3	CODE CS	DOC. NUMBER 1310A24127-0-MTR	REV B
CHANGE by Chang, Irene	12-Mar-2011	SHEET 41 OF 45	

WWW.AliSaler.Com

WWW.AliSaler.Com

WLAN CONN (MINICARD)

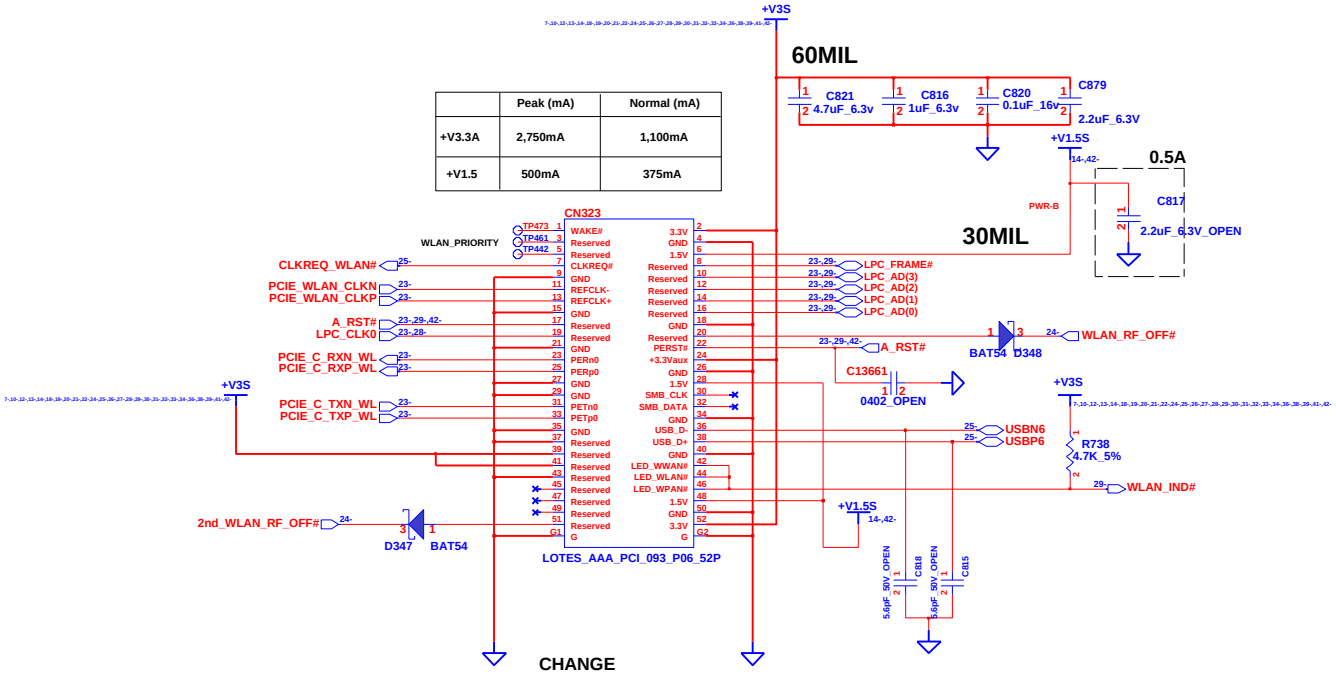

	Peak (mA)	Normal (mA)
+V3.3A	2,750mA	1,100mA
+V1.5	500mA	375mA

CHANGE

*BOM
CN323 : 6026B0184301

	FCH
WLAN_RF_OFF#	GPIO178
2nd_WLAN_RF_OFF#	GPIO180

6026B0221502 SI BUILD

INVENTEC

TITLE Sarah 15.6 Brazos
SCREW

SIZE	CODE	DOC. NUMBER	REV
A3	CS	1310A24127-0-MTR	B

CHANGE by Chang, Irene 1-Dec-2010

SHEET 42 OF 45

WWW.AliSaler.Com

WWW.AliSaler.Com

Power Button Board

LID SWITCH

+V3A_PBN
43-
LID_SW#_PBN 43-
U9200
VDD
OUT
GND
MAG_MH248BESO_SOT23_3P
C9200
0.1uF_16V
DGND
*BOM
6019B0602501
PBN_GND
PBN_GND

PBN Cable CN on PBN

+V3A_PBN
43-
PWR-C
PAD9200
PWR_LED#_PBN 43-
EC_PWRBTN#_PBN 43-
LID_SW#_PBN 43-
SMDPAD6_100_28X118
PBN_GND
D9201 LITEON_L13ESD5V0CA2_SOD523_2P_OPEN
D9202 LITEON_L13ESD5V0CA2_SOD523_2P_OPEN
D9203 LITEON_L13ESD5V0CA2_SOD523_2P_OPEN
PBN_GND

POWER BUTTON

BOM : 6026B0052301-004

EC_PWRBTN#_PBN 43-
SW9200
TEMIC_NTC033_XJ1J_X160T_4P
*BOM
6026B0052301
PBN_GND
S9200
S9201
SCREW230_600_1P
SCREW230_600_1P
PBN_GND
PBN_GND

POWER LED

+V3A_PBN
43-
PWR-C
R9201
100_5%
*BOM
6011B0028601
D9100
PWR_LED#_PBN 43-
R9200
100_5%
EVL_19_217_W1D_AP1Q2QY_3T

FIX9200 FIX9201 FIX9202 FIX9203
FIX_MASK FIX_MASK FIX_MASK FIX_MASK

Pick-Button BOARD

TO T/P MODULE

TP_L 43-
TP_R 43-
TP_CLK_TP 43-
TP_DAT_TP 43-
TP_SMBUS_DAT_TPB 43-
TP_SMBUS_CLK_TPB 43-
PAD9001
SMDPAD8_100_28X118
+V3A_TP
PWR-B 43-
TP_GND

TO MB

+V3A_TP
43-
PAD9000
TP_DAT_TP 43-
TP_CLK_TP 43-
TP_SMBUS_DAT_TPB 43-
TP_SMBUS_CLK_TPB 43-
SMDPAD6_100_28X118
TP_GND

TP_L 43-
SW9000
DIP_TMG_553_Q_T_R_6P
6026B0001201
TP_GND

TP_R 43-
SW9001
DIP_TMG_553_Q_T_R_6P
6026B0001201
TP_GND

S9000
S9001
SCREW230_600_1P
SCREW230_600_1P
TP_GND
TP_GND

FIX9001 FIX9002 FIX9003 FIX9004 FIX9005
FIX_MASK FIX_MASK FIX_MASK FIX_MASK FIX_MASK

INVENTEC			
TITLE Sarah 15.6 Brazos WLAN			
SIZE A3	CODE CS	DOC. NUMBER 1310A24127-0-MTR	REV B
CHANGE by Chang, Irene	23-Sep-2011	SHEET 43 OF 45	

WWW.AliSaler.Com

WWW.AliSaler.Com

USB BOARD

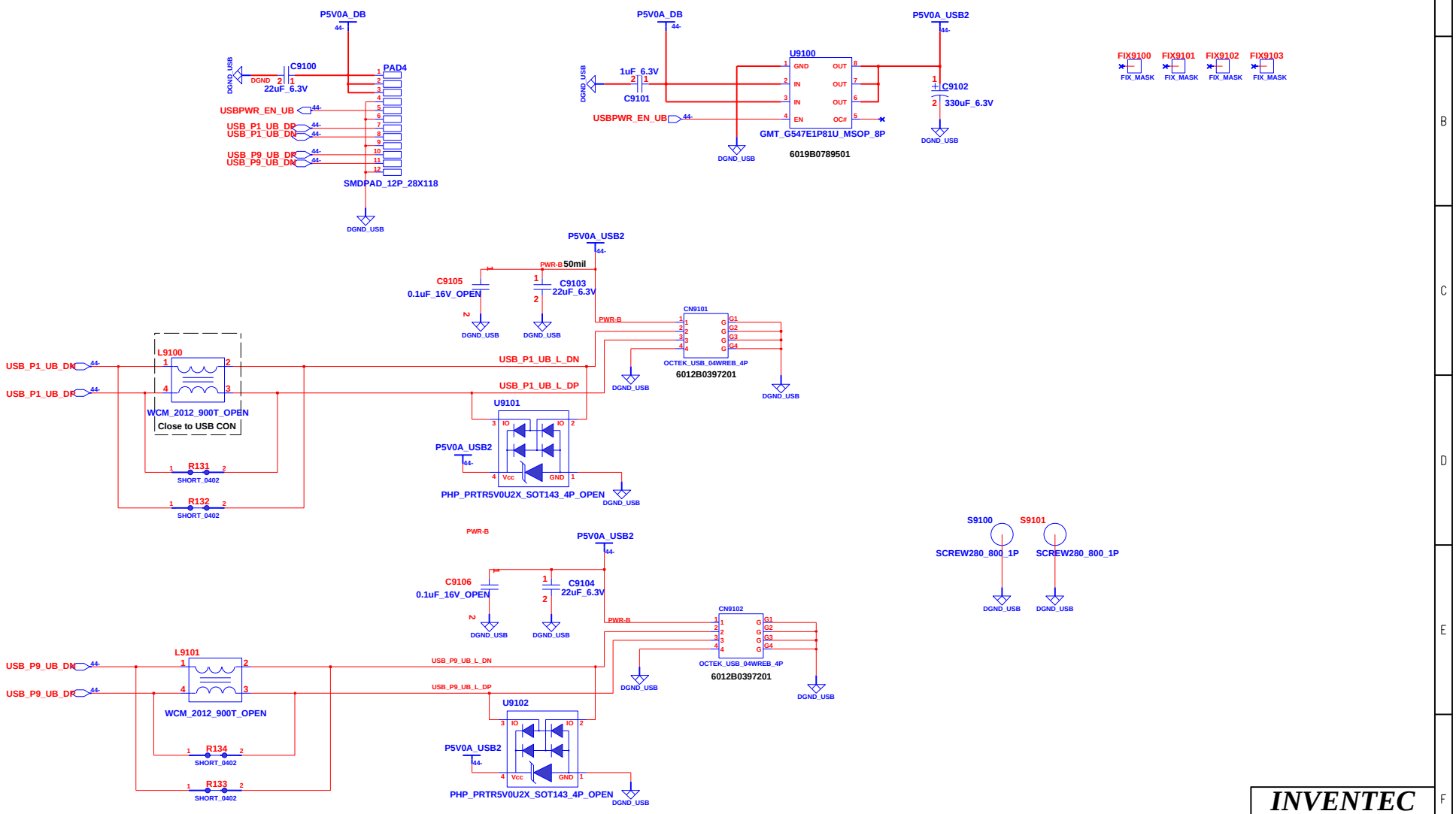

CHANGE by	Chang, Irene	6-Apr-2011	

INVENTEC

TITLE: *Sarah 15.6 Brazos*
STRAP

SIZE	CODE	DOC. NUMBER	REV
A3	CS	1310A24127-0-MTR	B

SHEET 44 OF 45

WWW.AliSaler.Com

WWW.AliSaler.Com

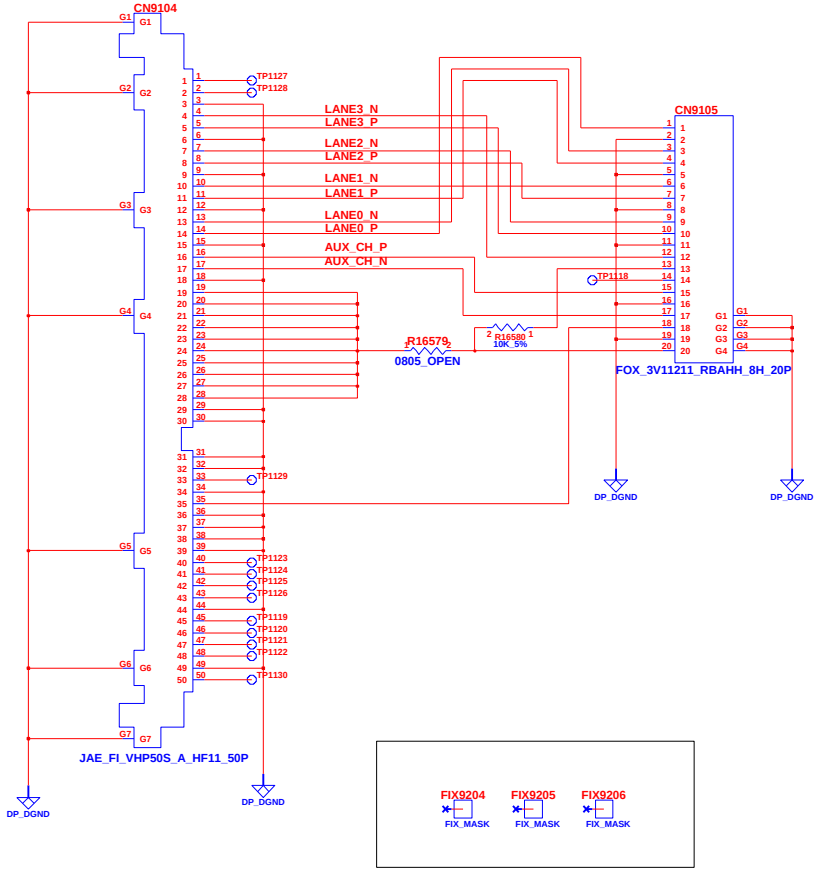

INVENTEC			
TITLE KF14BR-SCHE-DB-20110928-M3L			
SIZE A3	CODE CS	DOC. NUMBER	REV
CHANGE by KF14BR	21-Oct-2011	SHEET 45 OF 45	

WWW.AliSaler.Com