WWW.AliSaler.Com

Quicksilver Design

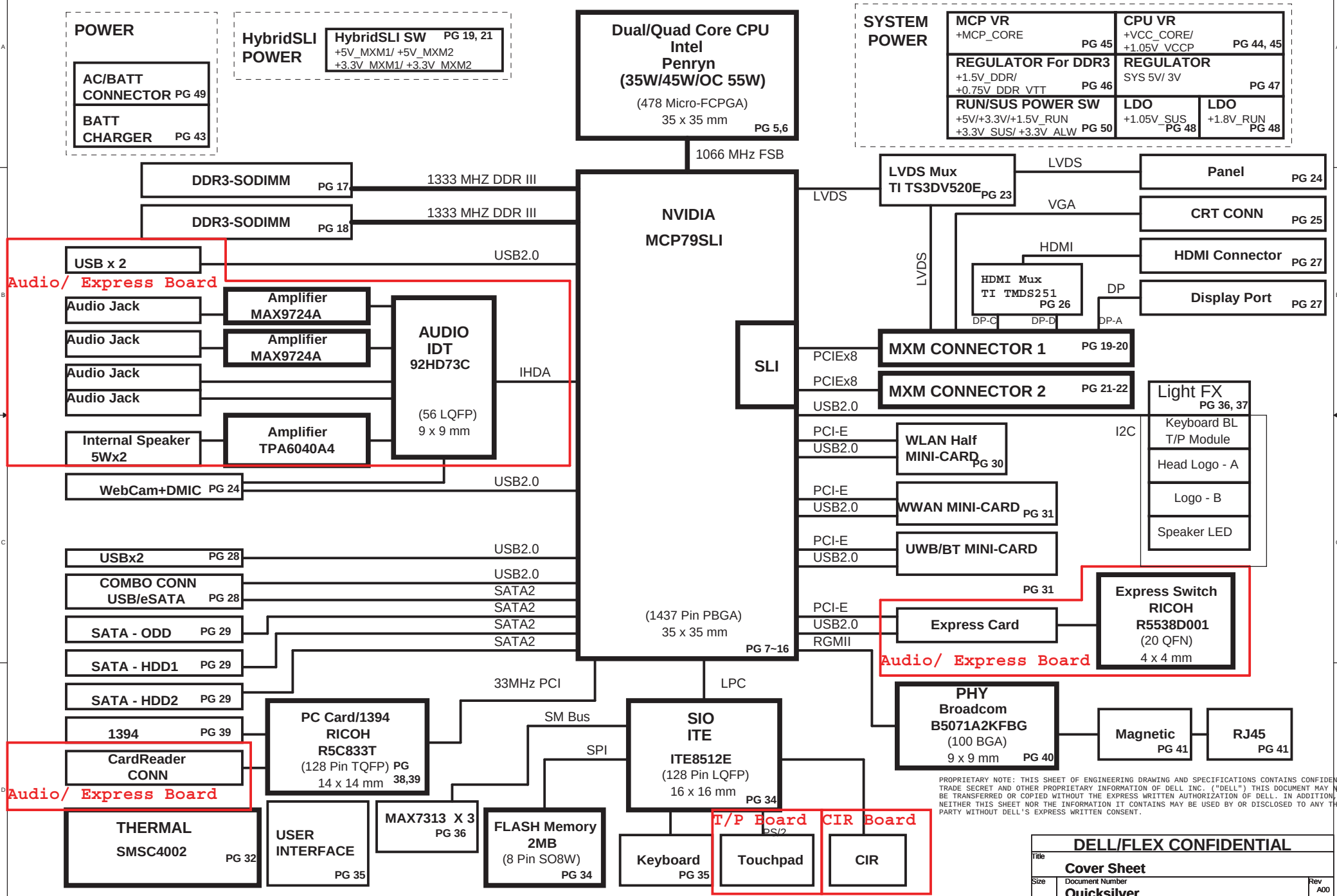

PROPRIETARY NOTE: THIS SHEET OF ENGINEERING DRAWING AND SPECIFICATIONS CONTAINS CONFIDENTIAL TRADE SECRET AND OTHER PROPRIETARY INFORMATION OF DELL INC. ("DELL") THIS DOCUMENT MAY NOT BE TRANSFERRED OR COPIED WITHOUT THE EXPRESS WRITTEN AUTHORIZATION OF DELL. IN ADDITION, NEITHER THIS SHEET NOR THE INFORMATION IT CONTAINS MAY BE USED BY OR DISCLOSED TO ANY THIRD PARTY WITHOUT DELL'S EXPRESS WRITTEN CONSENT.

DELL/FLEX CONFIDENTIAL

Title	Cover Sheet	
Size	Document Number: Quicksilver	Rev A00
Date: Monday, March 09, 2009	Sheet 1 of 61	

WWW.AliSaler.Com

WWW.AliSaler.Com

INDEX

Page#	Description
1	Schematic Block Diagram
2	Front Page
3	PCI RESET/CLOCK
4	POWER SEQUENCING
5-6	Penryn
7-16	MCP79
17-18	DDRIII SO-DIMM(204P)
19-22	MXM CONN
23	LCD Conn. & SSP
25	CRT Conn
26	DeMux (SN75DP122)
27	HDMI & DP CONN
28	USBx2 & eSATA
29	SATA & IDE Conn
30	Mini Card (WLAN)
31	MINI-CARD (WPAN,WWAN)
32	FAN & Thermal
33	SIO (ITE8512)
34	Flash ROM, RTC & CIR
35	Keyboard, Daughtor Board conn & User Interface
36, 37	LED Light FX
38, 39	PCCARD/Conn & 1394
40,41	PHY(B5071), RJ45 & Transform
42	System Reset Circuit
43	CHARGER (MAX8731)
44	CPU Core (MAX8786)
45	MCP79, 1.05VCC (MAX17007)
46	DDR3 1.5V/0.75V(TPS51116)
47	SYS 5V/3V(MAX17020)
48	1.05V_SUS/ 1.8V_RUN
49	DCIN,Batt
50	RUN POWER SW
51	Power Diagram
52	PAD& SCREW
53	PCI Reset Map

Power States

Power Rail	Control Signal	S0	S3	S4	S5	G3	S4/ M-off	S5/ M-off
+PWR_SRC	N/A	V	V	V	V	V		
+0.75V_DDR_VTT	RUN_ON	V						
+1.05V_VCCP	CPUVDD_EN	V						
+1.05V_RMGT	SLP_RMGT#	V						
+1.05V_SUS	SUS_ON	V	V					
+1.5V_RUN	RUN_ON	V						
+1.5V_DDR	SUS_ON	V	V					
+1.8V_RUN	RUN_ON	V						
+15V_ALW	N/A	V	V	V	V	V		
+3.3V_ALW	+3.3V_EN2	V	V	V	V	V		
+3.3V_RMGT	SLP_RMGT#	V						
+3.3V_RUN	RUN_ON	V						
+3.3V_SUS	SUS_ON	V	V					
+5V_ALW	+5V_EN1	V	V	V	V	V		
+5V_ALW2	N/A	V	V	V	V	V		
+5V_SUS	SUS_ON	V	V					
+5V_HDD	HDDC_EN	V	TBD					
+5V_MOD	MODC_EN	V	TBD					
+5V_RUN	RUN_ON	V						
+GFX_PWR_SRC	N/A	V	V	V	V	V		
+LCDVCC	ENVDD	V						
+MCP_CORE	RUN_ON	V						
+RTC_CELL	RTC	V	V	V	V	V		
+VCC_CORE	1.05V_VCCP _PWRGD	V						
+USB_RIGHT_PWR	USB_SIDE_EN#	V	TBD					
+USB_LEFT_PWR	USB_BACK_EN#	V	TBD					

By Anthony

PROPRIETARY NOTE: THIS SHEET OF ENGINEERING DRAWING AND SPECIFICATIONS CONTAINS CONFIDENTIAL TRADE SECRET AND OTHER PROPRIETARY INFORMATION OF DELL INC. ("DELL") THIS DOCUMENT MAY NOT BE TRANSFERRED OR COPIED WITHOUT THE EXPRESS WRITTEN AUTHORIZATION OF DELL. IN ADDITION, NEITHER THIS SHEET NOR THE INFORMATION IT CONTAINS MAY BE USED BY OR DISCLOSED TO ANY THIRD PARTY WITHOUT DELL'S EXPRESS WRITTEN CONSENT.

Title: FRONTPAGE

Size | Document Number: Dell/FLEX Confidential | Rev: A00

Date: Monday, March 09, 2009 | Sheet 2 of 61

WWW.AliSaler.Com

WWW.AliSaler.Com

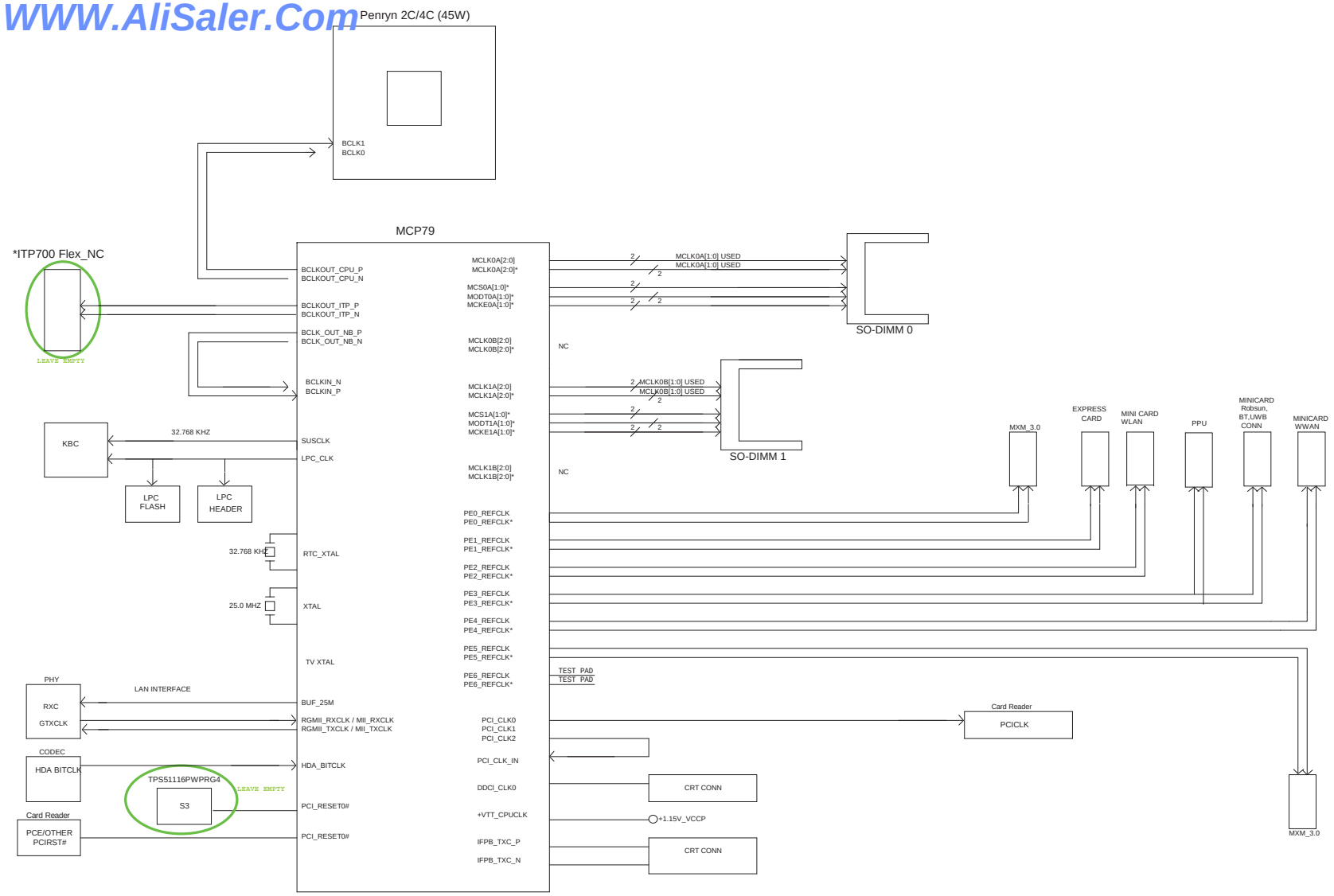

PROPRIETARY NOTE: THIS SHEET OF ENGINEERING DRAWING AND SPECIFICATIONS CONTAINS CONFIDENTIAL TRADE SECRET AND OTHER PROPRIETARY INFORMATION OF DELL INC. ("DELL") THIS DOCUMENT MAY NOT BE TRANSFERRED OR COPIED WITHOUT THE EXPRESS WRITTEN AUTHORIZATION OF DELL. IN ADDITION, NEITHER THIS SHEET NOR THE INFORMATION IT CONTAINS MAY BE USED BY OR DISCLOSED TO ANY THIRD PARTY WITHOUT THE EXPRESS WRITTEN CONSENT

Title	CLOCK MAP	
Size	Document Number: Dell/FLEX Confidential	Rev A00
Date: Monday, March 09, 2009	Sheet 3 of 61	

WWW.AliSaler.Com

WWW.AliSaler.Com

Quicksilver Power Up Sequence.

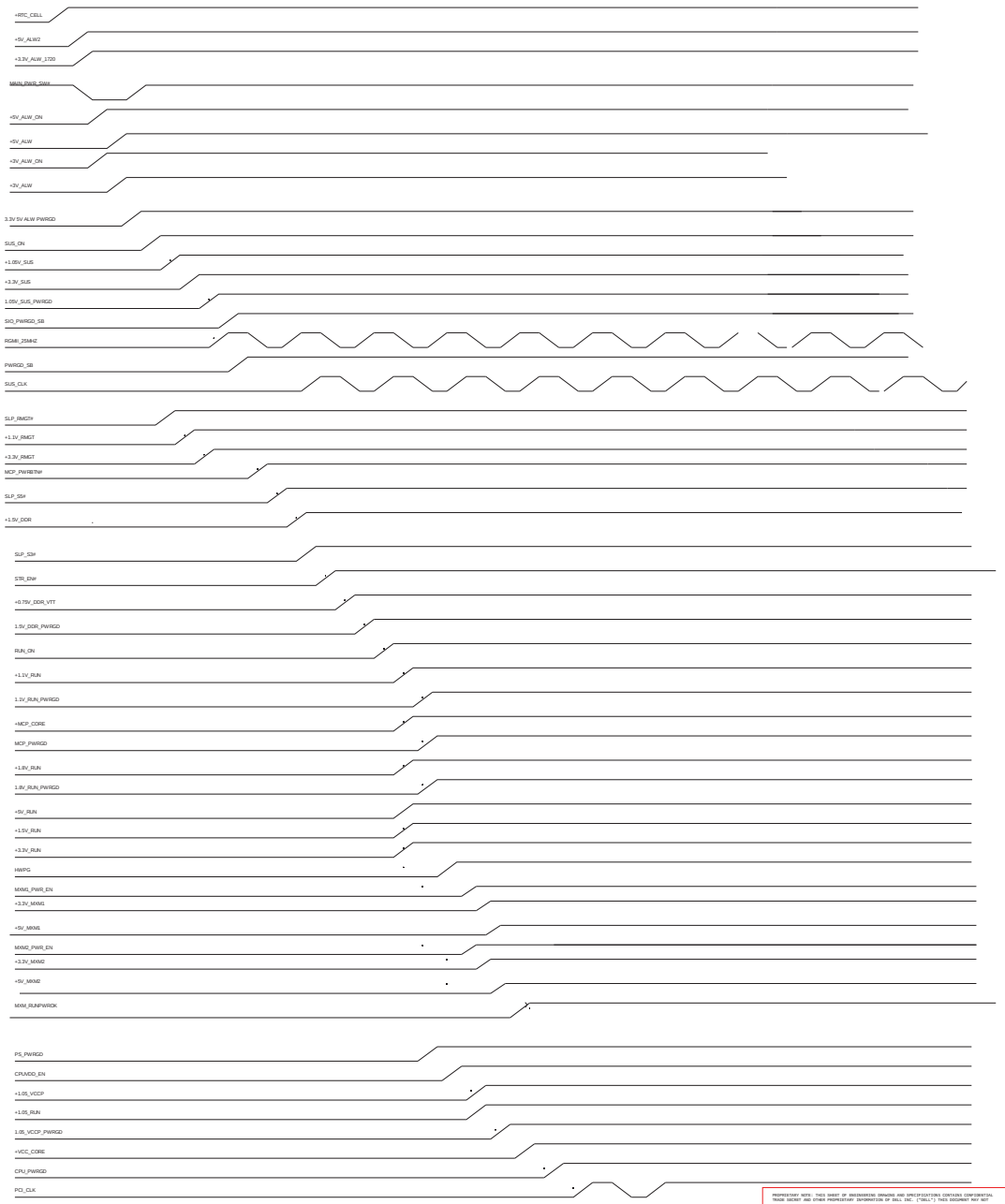

PROPRIETARY NOTE: THIS SHEET OF ENGINEERING DRAWING AND SPECIFICATIONS CONTAINS CONFIDENTIAL TRADE SECRET AND OTHER PROPRIETARY INFORMATION OF DELL INC. ("DELL") THIS DOCUMENT MAY NOT BE TRANSFERRED OR COPIED WITHOUT THE EXPRESS WRITTEN AUTHORIZATION OF DELL. IN ADDITION, THE INFORMATION CONTAINED IN THIS DOCUMENT MAY NOT BE USED BY OR DISCLOSED TO ANY THIRD PARTY WITHOUT DELL'S EXPRESS WRITTEN CONSENT.

TITLE	POWER SEQUENCING
SIZE	DOCUMENT NUMBER
	REV A00
	Dell/FLEX Confidential
SCALE: NONE	SHEET 1 OF 1

WWW.AliSaler.Com

WWW.AliSaler.Com

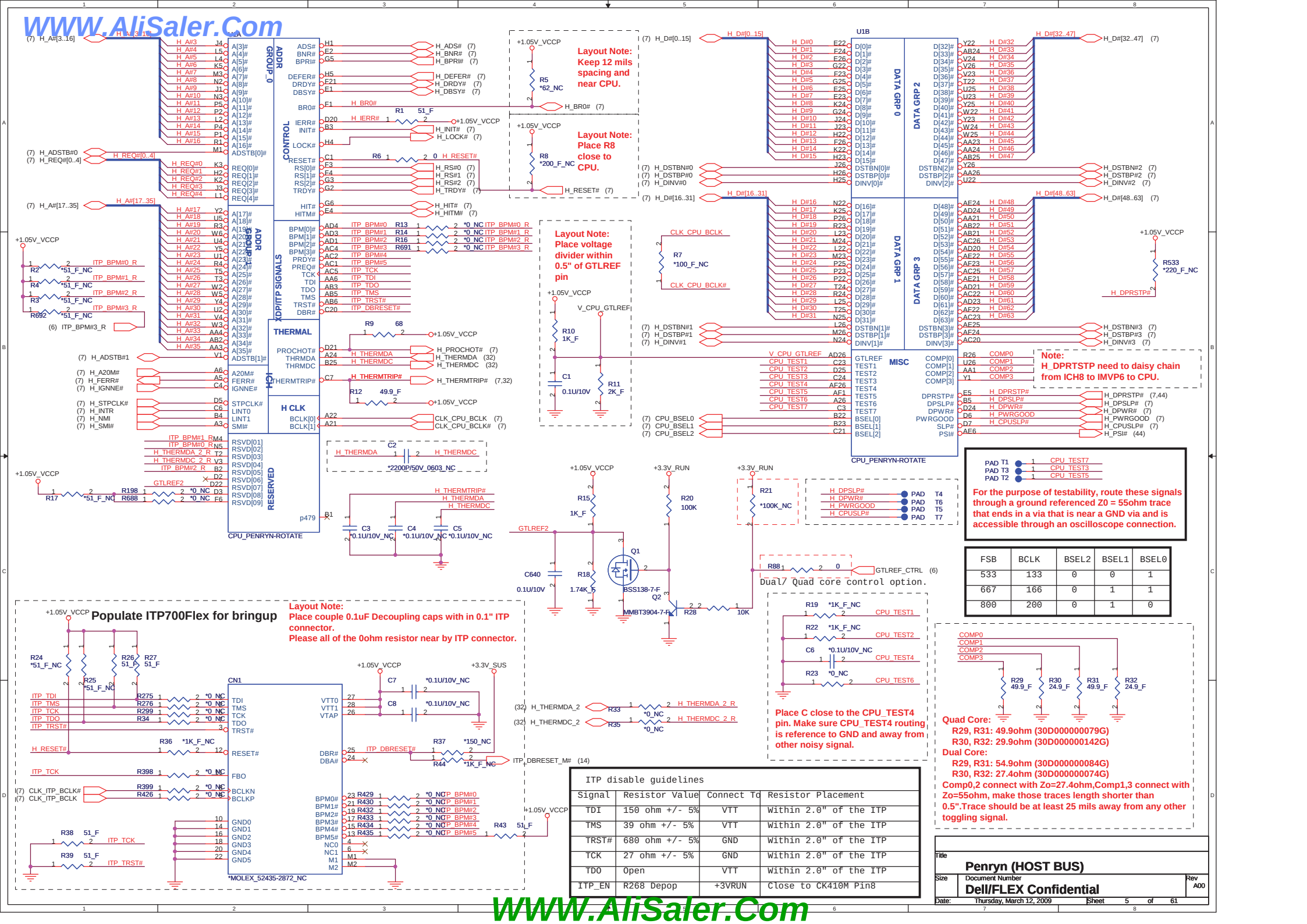

FSB	BCLK	BSEL2	BSEL1	BSEL0
533	133	0	0	1
667	166	0	1	1
800	200	0	1	0

ITP disable guidelines

Signal	Resistor Value	Connect To	Resistor Placement
TDI	150 ohm +/- 5%	VTT	Within 2.0" of the ITP
TMS	39 ohm +/- 5%	VTT	Within 2.0" of the ITP
TRST#	680 ohm +/- 5%	GND	Within 2.0" of the ITP
TCK	27 ohm +/- 5%	GND	Within 2.0" of the ITP
TDO	Open	VTT	Within 2.0" of the ITP
ITP_EN	R268 Depop	+3VRUN	Close to CK410M Pin8

WWW.AliSaler.Com

WWW.AliSaler.Com

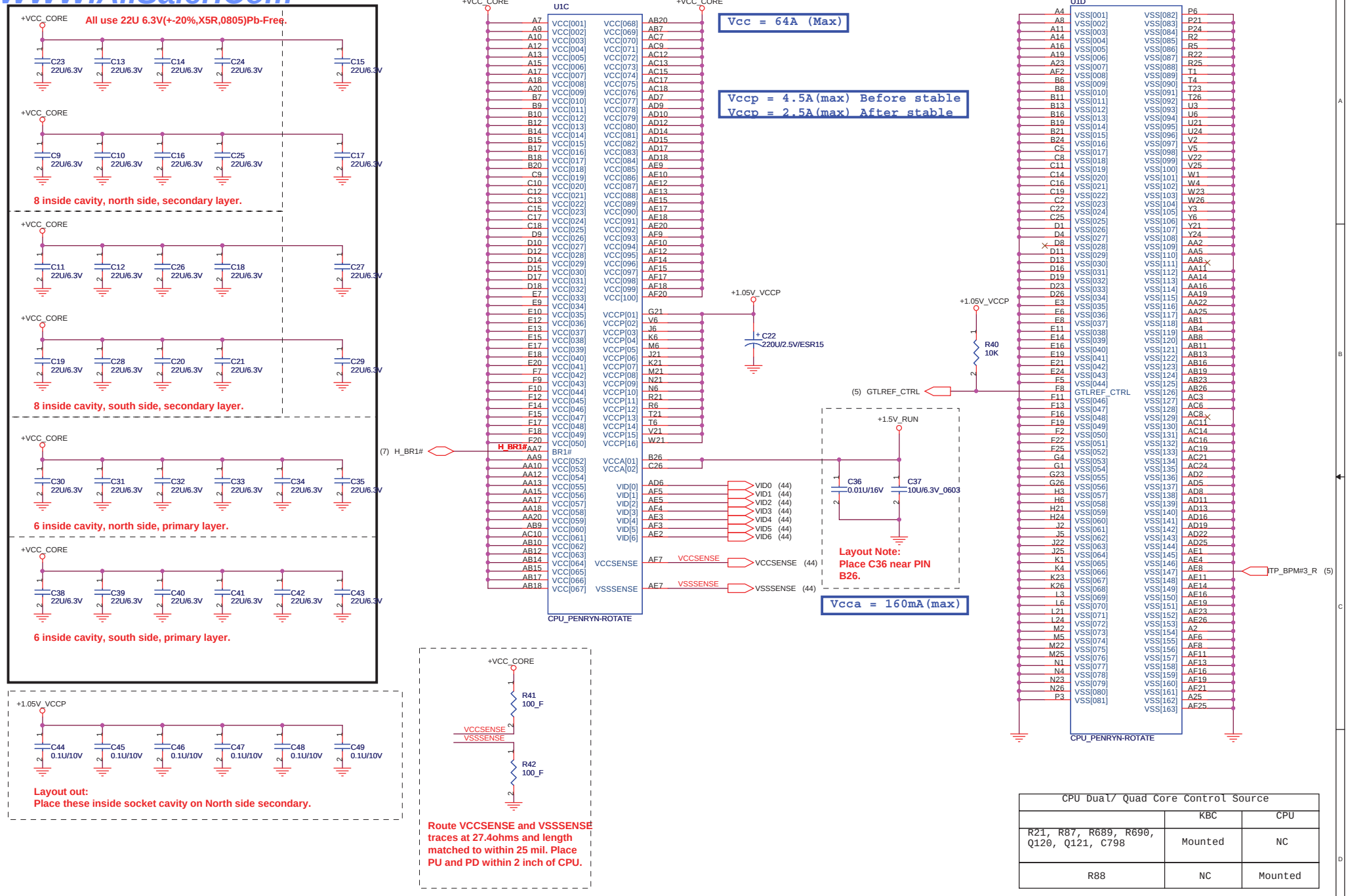

CPU Dual/ Quad Core Control Source		
	KBC	CPU
R21, R87, R689, R690, Q120, Q121, C798	Mounted	NC
R88	NC	Mounted

Title: Penryn (POWER/NC)

Size | Document Number: Dell/FLEX Confidential | Rev: A00

Date: Monday, March 09, 2009 | Sheet 6 of 61

WWW.AliSaler.Com

WWW.AliSaler.Com

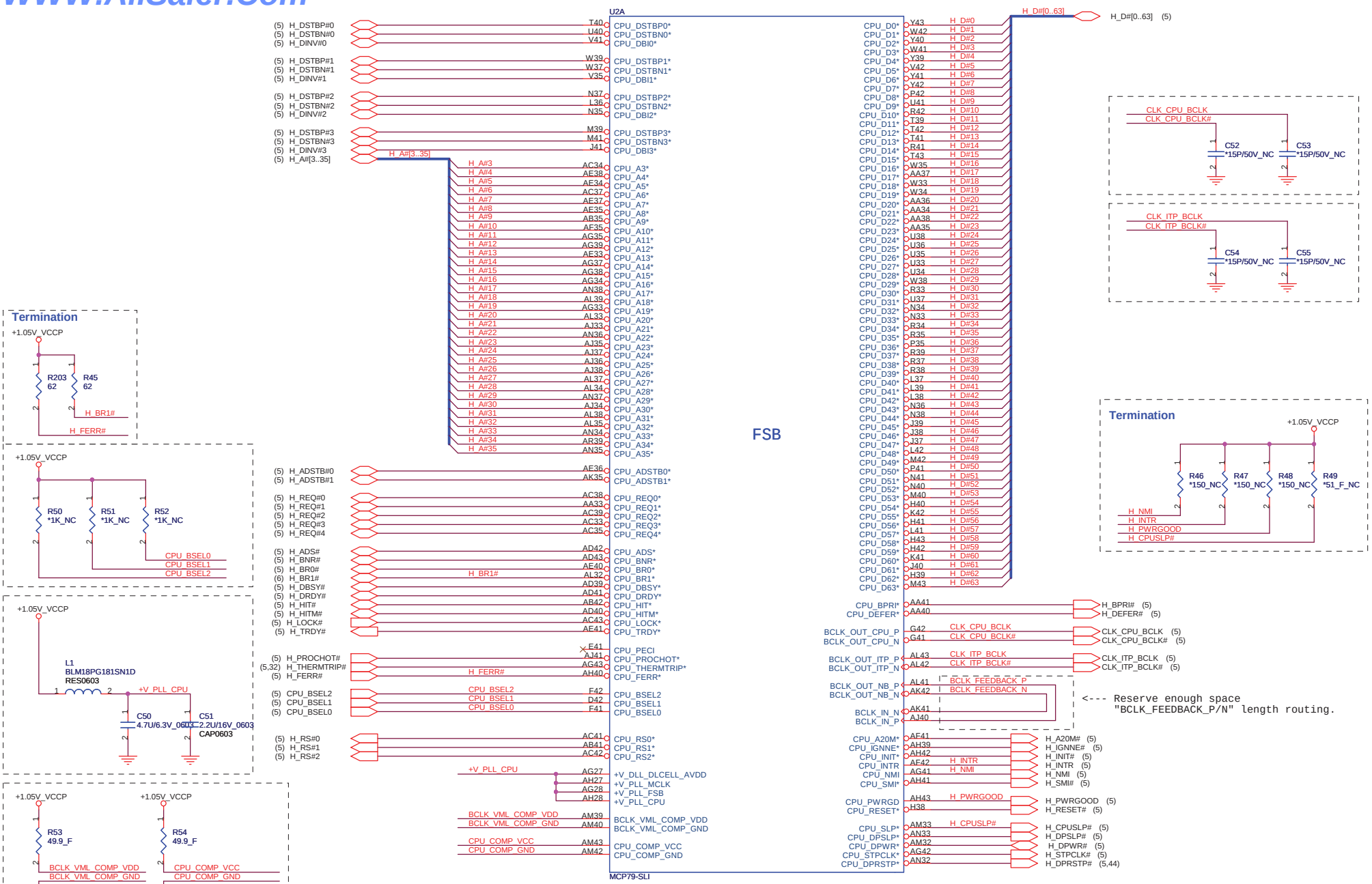

+V_DLL_DLCELL_AVDD
150mA with RUN rail
1 x ferrite bead
1 x 4.7uF X5R ceramic
1 x 0.1uF X7R ceramic

+V_PLL_MCLK
20mA with RUN rail
1 x ferrite bead
1 x 1uF X5R ceramic
1 x 0.1uF X7R ceramic

+V_PLL_FSB
29mA with RUN rail
1 x ferrite bead
1 x 4.7uF X5R ceramic
1 x 0.1uF X7R ceramic

+V_PLL_CPU
15mA with RUN rail
1 x ferrite bead
1 x 4.7uF X5R ceramic
1 x 0.1uF X7R ceramic

1. Route at normal impedance and 8 mils spacing to resistor.
2. 49.9 ohm to GND or VTT_CPU less than 1 inch from MCP79.

Title	MCP79_A (HOST)
Size	
Document Number	Dell/FLEX Confidential
Rev	A00
Date:	Thursday, March 12, 2009
Sheet	7 of 61

WWW.AliSaler.Com

WWW.AliSaler.Com

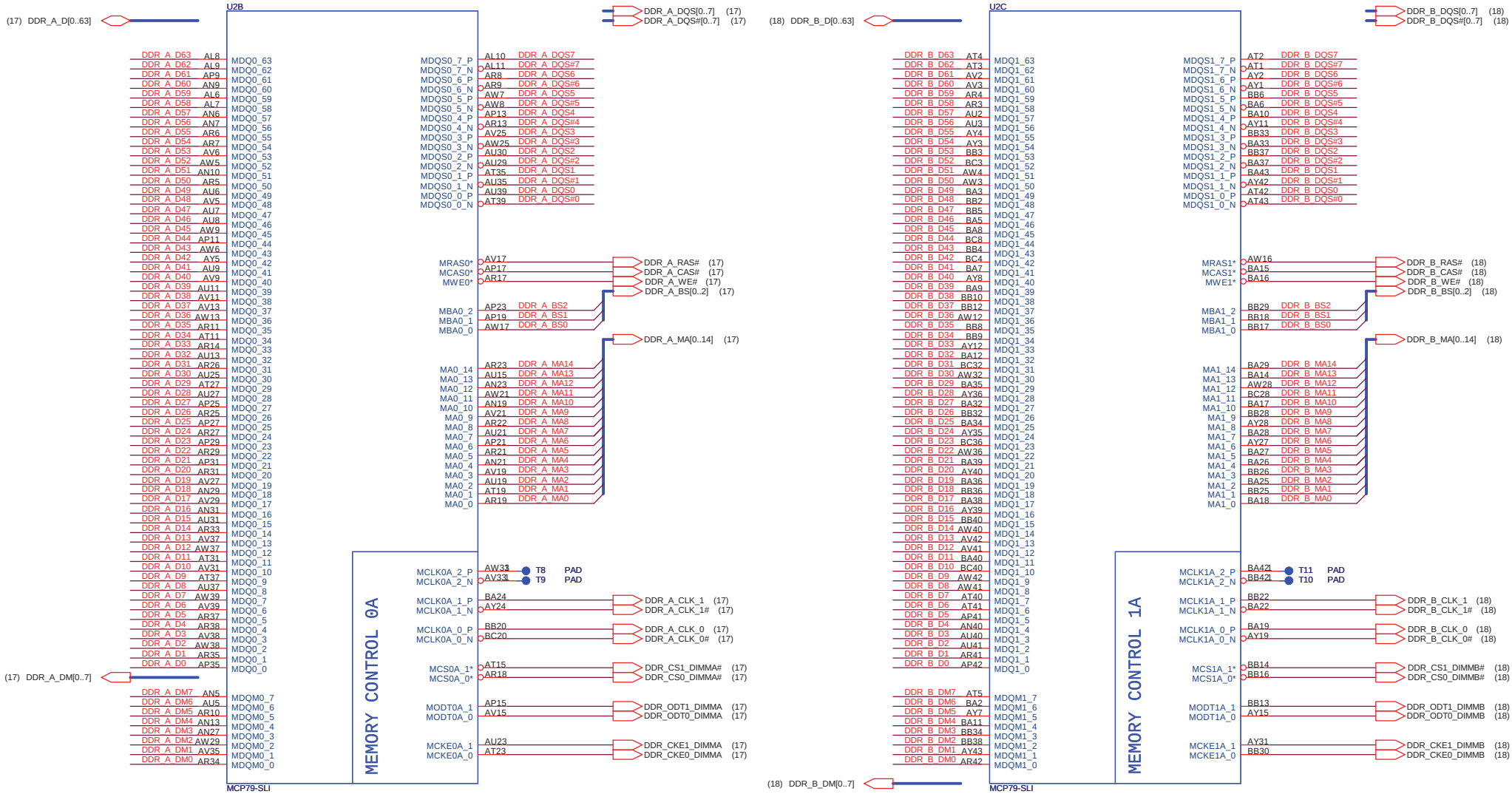

Layout Notice:
Memory Data Signal Group
MCP79 BGA Breakout (<175ps): Route at 50 ohm impedance and 1.5x dielectric height spacing.
After Breakout: Route at 40 ohm impedance and 4x(Microstrip) or 3x(Stripline) dielectric spacing.
DIMM Fan-in (<90ps): Route at 40 ohm impedance and 1.5x dielectric height spacing.

Memory Data Strobes
Route strobes differentially at 66 ohm impedance (42 ohm SE) and 5x dielectric height spacing to other signals.

Memory Clock Signal Group
MCP79 BGA Breakout (<90ps): Route at 50 ohm SE / 100 ohm differential impedance.
After Breakout: Route at 40 ohm SE / 66 ohm differential impedance and 5x dielectric height spacing to other signals.

Memory Address/Command/Control Signal Group
MCP79 BGA Breakout (<90ps): Route at 50 ohm impedance and 1.5x dielectric height spacing.
After Breakout: Route at 40 ohm impedance and 2x dielectric height to other signals and 3x dielectric spacing to other non-associated signals.
DIMM Fan-in (<90ps): Route at 40 ohm impedance and 1.5x dielectric height spacing.

Title	MCP79_B (DDR3)	
Size	Document Number: Dell/FLEX Confidential	Rev A00
Date: Thursday, March 12, 2009	Sheet 8 of 61	

WWW.AliSaler.Com

WWW.AliSaler.Com

+V_VPLL
39mA with RUN rail

+V_PLL_XREF_XS
17mA with RUN rail

+V_PLL_CORE
19mA with RUN rail

+V_PLL_DP
12mA with RUN rail

1 x ferrite bead
2 x 4.7uF X5R ceramic
1 x 2.2uF X7R ceramic

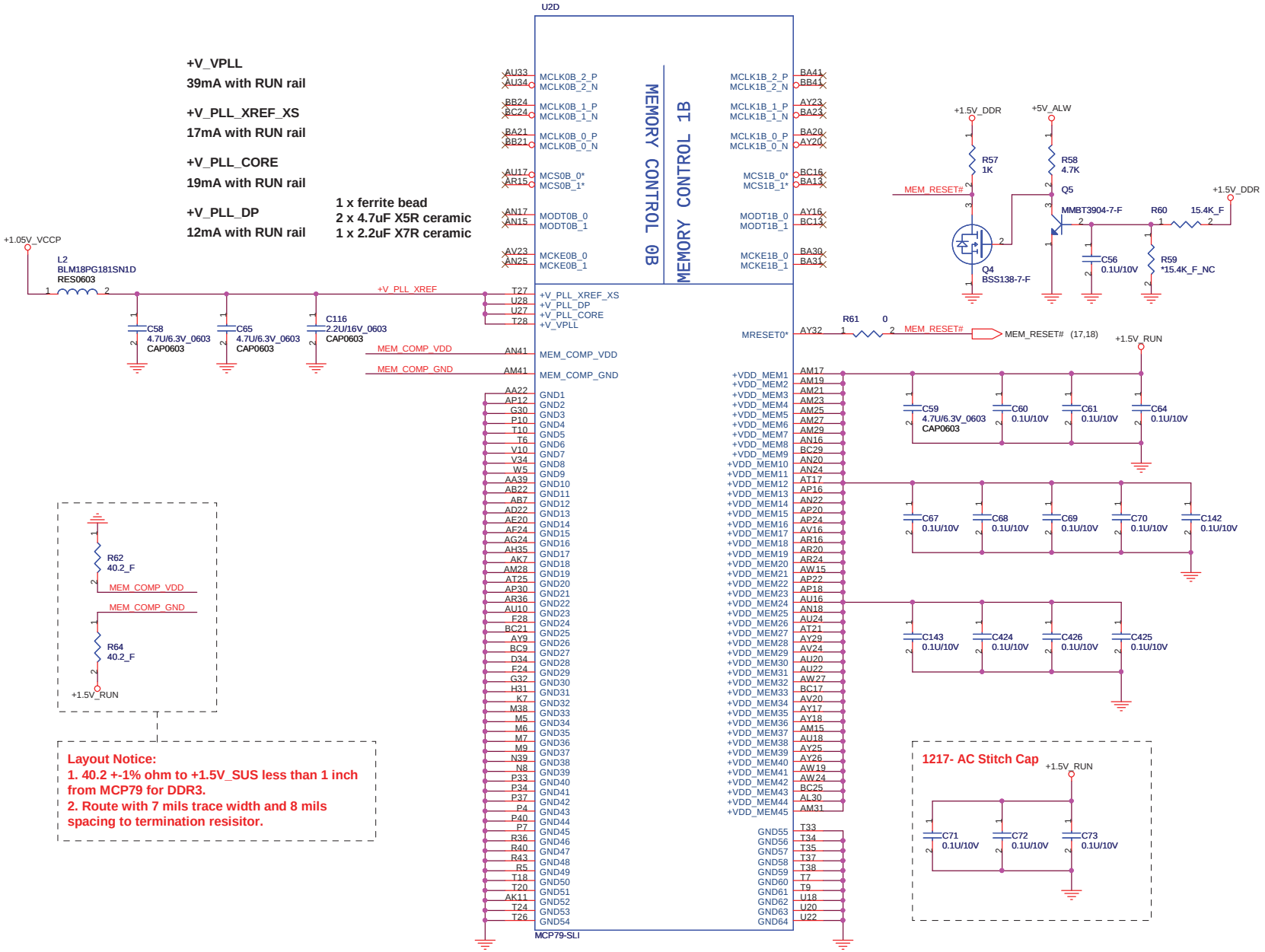

4.3A with ALW rail for S0
318mA for S0 Idle

1 x 10uF ceramic
9 x 0.1uF X7R ceramic

Layout Notice:
1. 40.2 +-1% ohm to +1.5V_SUS less than 1 inch from MCP79 for DDR3.
2. Route with 7 mils trace width and 8 mils spacing to termination resisitor.

Title	MCP79_C (MEM POWER)	
Size	Document Number: Dell/FLEX Confidential	Rev A00
Date: Thursday, March 12, 2009	Sheet 9 of 61	

WWW.AliSaler.Com

WWW.AliSaler.Com

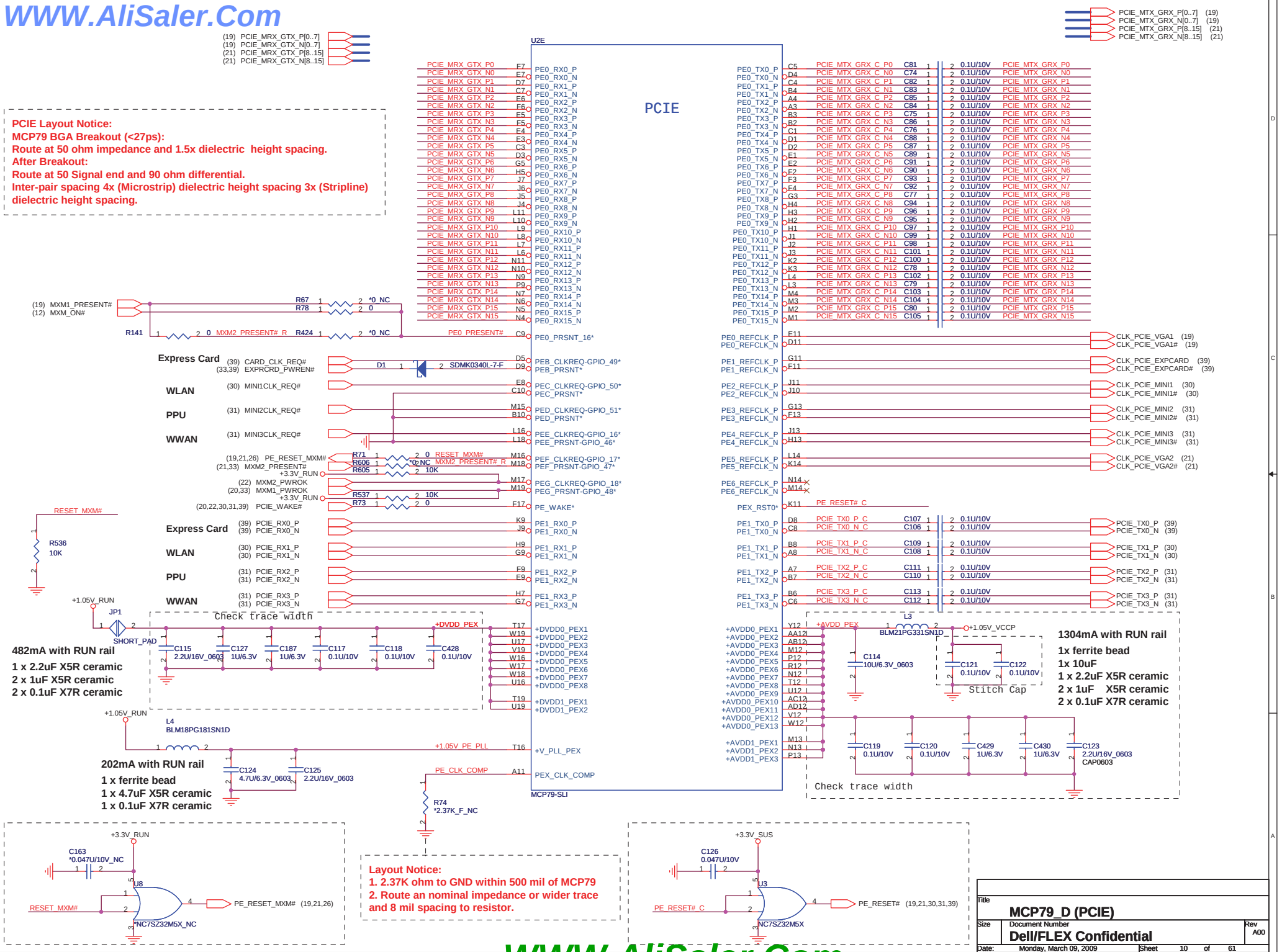

WWW.AliSaler.Com

WWW.AliSaler.Com

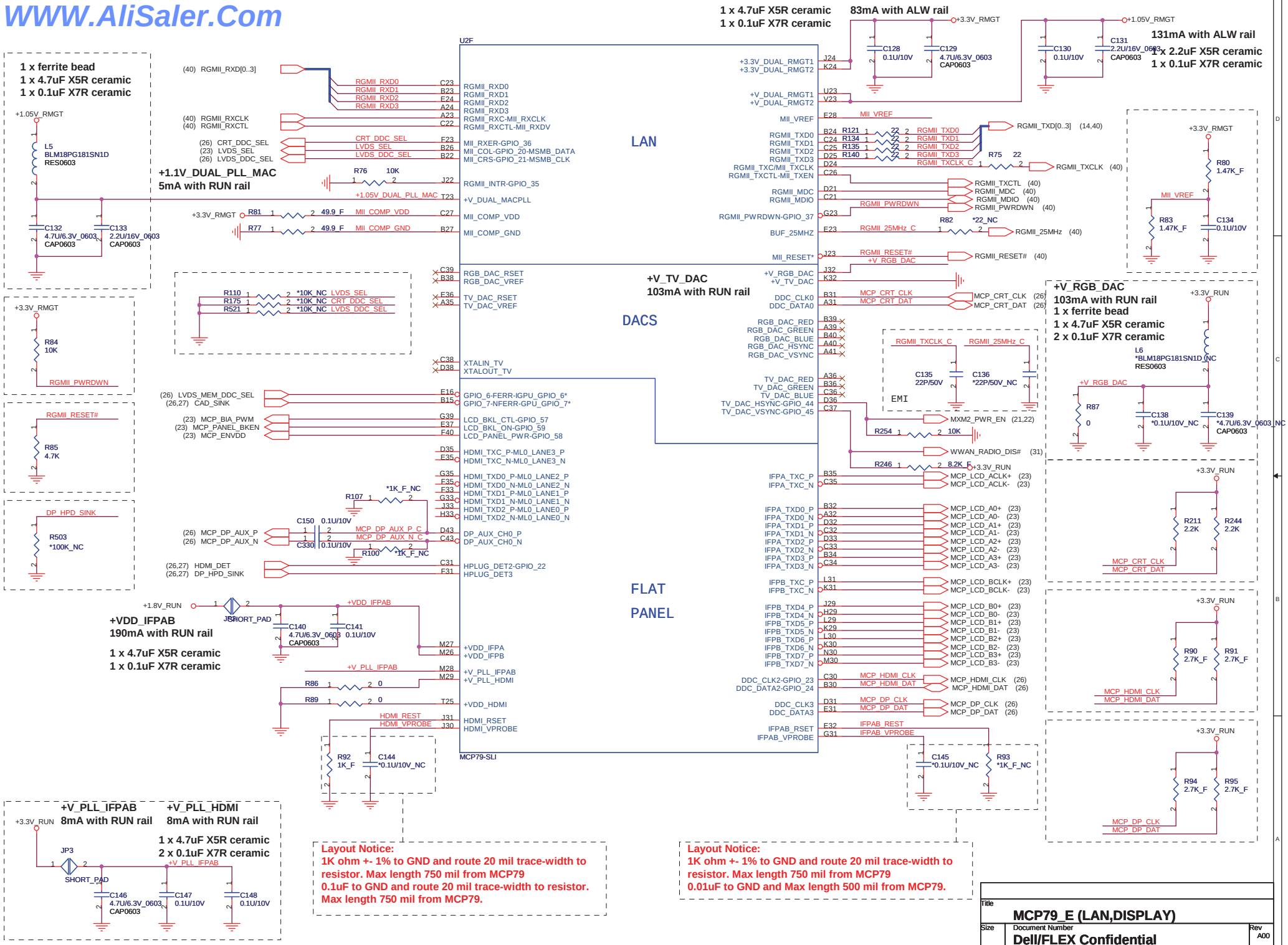

WWW.AliSaler.Com

WWW.AliSaler.Com

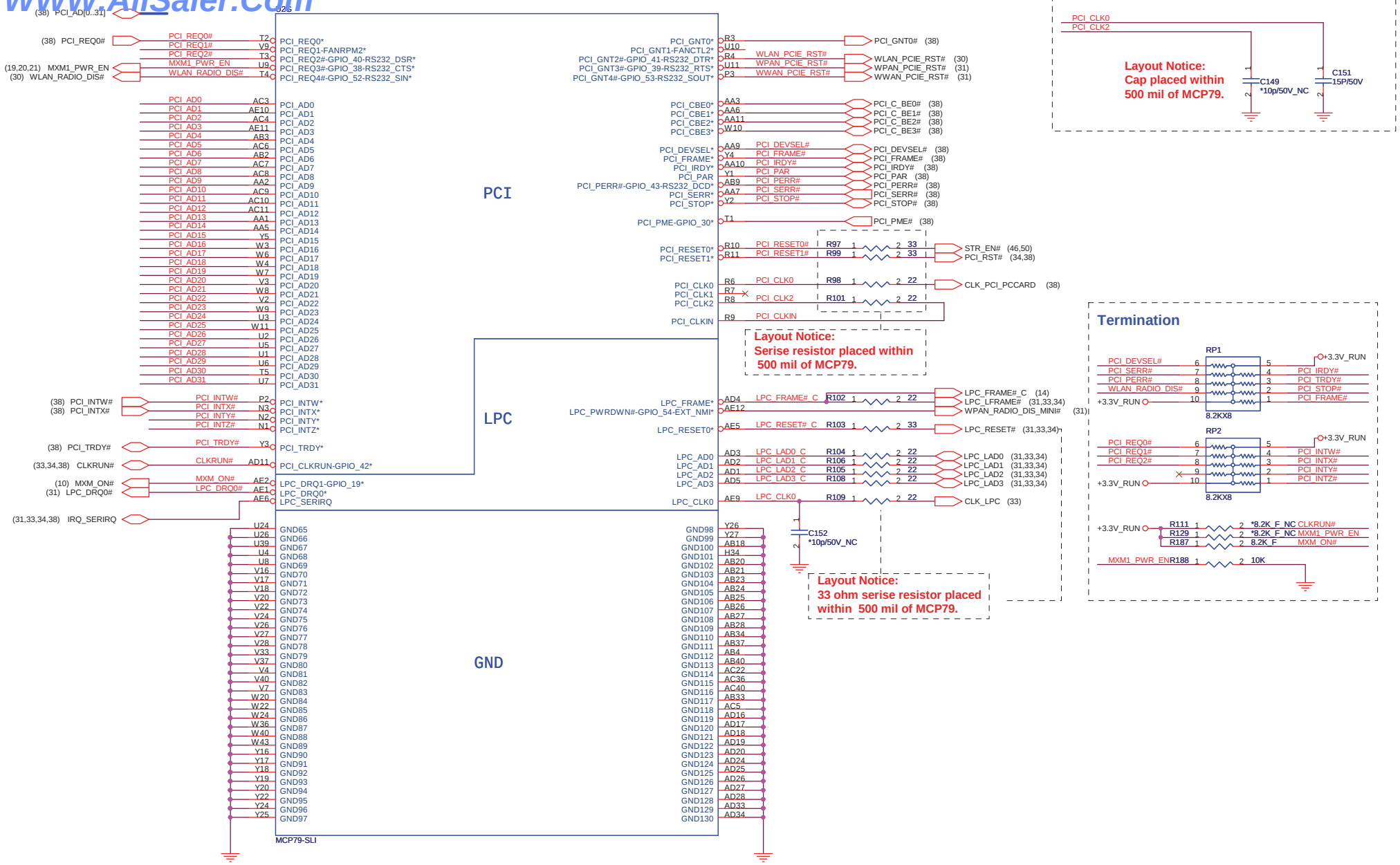

Title	MCP79_F (PCI,LPC)
Size	
Document Number	Dell/FLEX Confidential
Rev	A00
Date:	Monday, March 09, 2009
Sheet	12 of 61

WWW.AliSaler.Com

WWW.AliSaler.Com

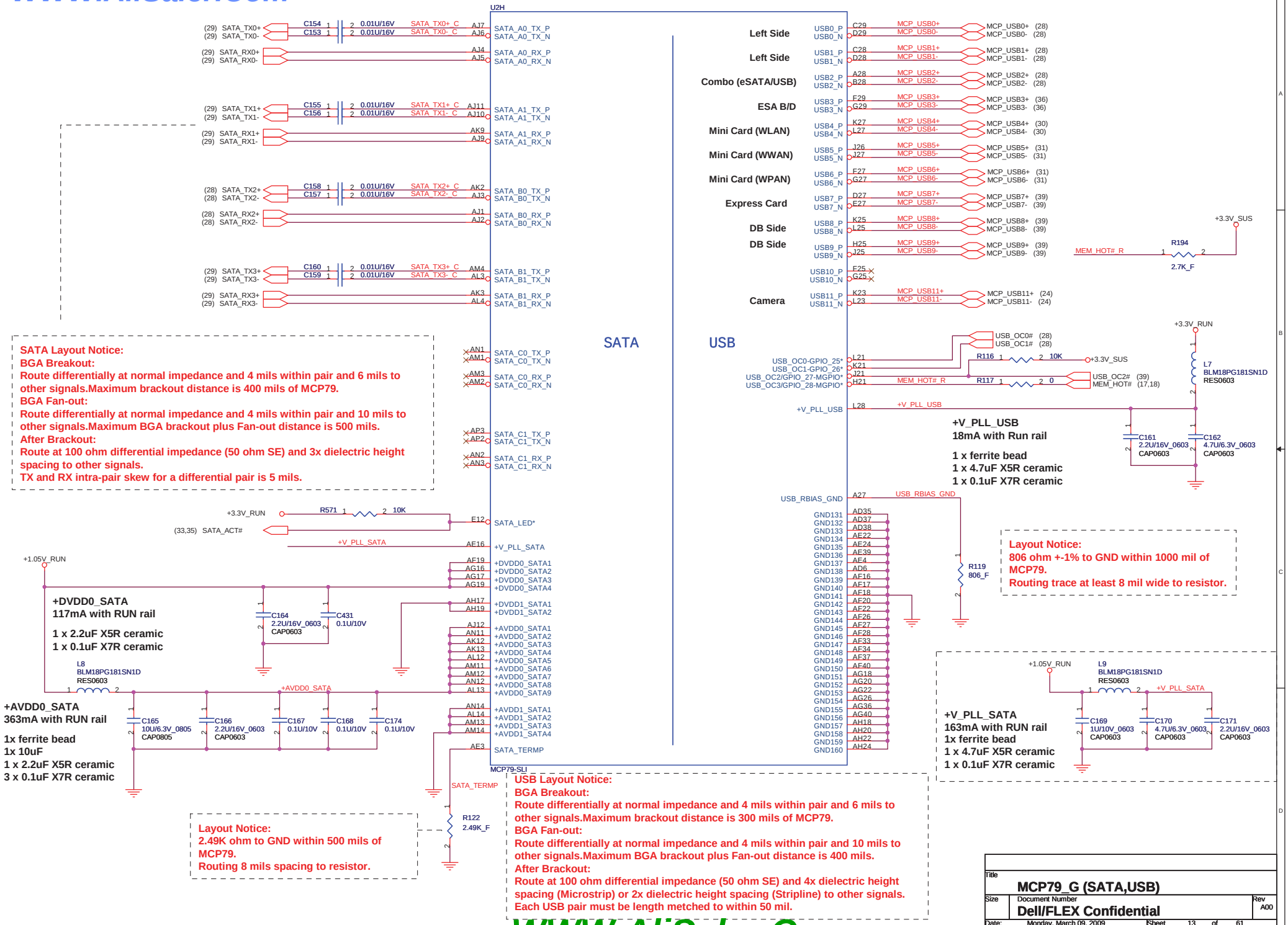

SATA Layout Notice:
BGA Breakout:
Route differentially at normal impedance and 4 mils within pair and 6 mils to other signals.Maximum brackout distance is 400 mils of MCP79.
BGA Fan-out:
Route differentially at normal impedance and 4 mils within pair and 10 mils to other signals.Maximum BGA brackout plus Fan-out distance is 500 mils.
After Brackout:
Route at 100 ohm differential impedance (50 ohm SE) and 3x dielectric height spacing to other signals.
TX and RX intra-pair skew for a differential pair is 5 mils.

Layout Notice:
806 ohm +-1% to GND within 1000 mil of MCP79.
Routing trace at least 8 mil wide to resistor.

Layout Notice:
2.49K ohm to GND within 500 mils of MCP79.
Routing 8 mils spacing to resistor.

USB Layout Notice:
BGA Breakout:
Route differentially at normal impedance and 4 mils within pair and 6 mils to other signals.Maximum brackout distance is 300 mils of MCP79.
BGA Fan-out:
Route differentially at normal impedance and 4 mils within pair and 10 mils to other signals.Maximum BGA brackout plus Fan-out distance is 400 mils.
After Brackout:
Route at 100 ohm differential impedance (50 ohm SE) and 4x dielectric height spacing (Microstrip) or 2x dielectric height spacing (Stripline) to other signals.
Each USB pair must be length metched to within 50 mil.

Title	MCP79_G (SATA,USB)
Size	Document Number: Dell/FLEX Confidential
Rev	A00
Date:	Monday, March 09, 2009
Sheet	13 of 61

WWW.AliSaler.Com

WWW.AliSaler.Com

+V_DUAL_HDA 1 x 4.7uF X5R ceramic
7mA with ALW rail 2 x 0.1uF X7R ceramic

+V_PLL_NV_H
20mA with RUN rail
+V_PLL_SP_SPREF
17mA with RUN rail
1 x ferrite bead
1 x 4.7uF X5R ceramic
2 x 0.1uF X7R ceramic

U2I

HDA

(39) HDA_SDATA_IN — R260 22 — HDA_SDATA_IN_R — G15 HDA_SDATA_IN0
(20) HDA_SDATA_IN_MXM — R261 22 — HDA_SDATA_IN_MXM_R — J14 HDA_SDATA_IN1-GPIO_2-PS2_KB_CLK
+3.3V_SUS — R598 100K — J15 HDA_SDATA_IN2-GPIO_3-PS2_KB_DATA
(46) VRDD_0 — +3.3V_SUS — R123 49.9_F — A15 HDA_PULLDN_COMP

+V_DUAL_HDA1, +V_DUAL_HDA2 — J16, K16 — C793 0.1U/10V, C172 0.1U/10V, C176 4.7U/6.3V_0603 CAP0603 — +3.3V_SUS

HDA_SDATA_OUT — F15 — HDA_SDATA_OUT_R — R124 22, R195 22 — HDA_SDATA_OUT (39), HDA_SDATA_OUT_MXM (20)
HDA_BITCLK — E15 — HDA_BITCLK_R — R126 22, R257 22 — HDA_BITCLK (39), HDA_BITCLK_MXM (20)
C177 22P/50V, C173 22P/50V

HDA_RESET* — K15 — HDA_RESET#_R — R127 0, R258 0 — HDA_RESET# (39), HDA_RESET#_MXM (20)
HDA_SYNC — L15 — HDA_SYNC_R — R128 0, R259 0 — HDA_SYNC (39), HDA_SYNC_MXM (20)
HDA_DOCK_EN-GPIO_4-PS2_MS_CLK* — K17
HDA_DOCK_RST-GPIO_5-PS2_MS_DATA* — L17
DP_SEL (26)
HDMI_DDC_SEL (26)
R522 *10K_NC, R523 *10K_NC
C178 10P/50V, C179 10P/50V

+1.05V_VCCP — L10 BLM18PG181SN1D — +V_PLL_NV_H — AE18, AE17 — +V_PLL_NV_H, +V_PLL_SP_SPREF
C180 4.7U/6.3V_0603 CAP0603, C175 2.2U/16V_0603 CAP0603, C181 2.2U/16V_0603 CAP0603

(46) VRDD_1 — +3.3V_SUS — R597 100K — L24 GPIO_1-PWRDN_OK-SPI_CS1

SLP_S3* — G17 — SIO_SLP_S3# (33,34,36,39)
SLP_RMGT* — J17 — SLP_RMGT# (16)
SLP_S5* — H17 — SIO_SLP_S5# (33,39,46)
R131 *22K_F_NC, R132 *22K_F_NC, R133 *22K_F_NC

THERM_DIODE_P — B11 — PAD T19
THERM_DIODE_N — C11 — PAD T18

MISC

(33) SIO_EXT_WAKE# — L26 GPIO_12-SUS_STAT-ACCLMTR_EXT_TRIG*
(33) MCP_A20GATE — K13 A20GATE
(33) MCP_KBRDRSTIN# — L13 KBRDRSTIN*
(33) MCP_PME# — C19 SIO_PME*
(33) MCP_EXT_SMI# — C18 EXT_SMI/GPIO_32*
+RTC_CELL — R138 49.9K_F — B20 INTRUDER*
T25 PAD, T27 PAD — LID# — M25 LID*, LLB# — M24 LLB*
(44) DPRSLPVR — C182 0.1U/10V — M22 CPU_DPRSLPVR
(33) MCP_PWRBTN# — R143 0 — C16 PWRBTN*
+3.3V_SUS — R142 10K — D16 RSTBTN*
(5) ITP_DBRESET_M# — ITP_DBRESET_M# — RTC_RST# — C20 RTC_RST*
(33) PWRGD_SB — D20 PWRGD_SB
(33) PS_PWRGD — E20 PS_PWRGD
(33,44) CPU_PWRGD — C17 CPU_VLD
T20 PAD, T22 PAD, T21 PAD, T24 PAD, T23 PAD — MCP_JTAG_TDI — E19 JTAG_TDI
MCP_JTAG_TDO — F19 JTAG_TDO
MCP_JTAG_TMS — J19 JTAG_TMS
MCP_JTAG_TRST# — J18 JTAG_TRST*
MCP_JTAG_TCK — G19 JTAG_TCK
R154 10K, R150 10K
XTALIN — A16 XTALIN
XTALOUT — B16 XTALOUT
XTALIN_RTC — A19 XTALIN_RTC
XTALOUT_RTC — B19 XTALOUT_RTC

MCP_VID0-GPIO_13 — L20 — MCP_CORE_VID0 — MCP_CORE_VID0 (45)
MCP_VID1-GPIO_14 — M20 — MCP_CORE_VID1 — MCP_CORE_VID1 (45)
MCP_VID2-GPIO_15 — M21 — MCP_CORE_VID2 — MCP_CORE_VID2 (45)
SPKR — C13 — SPKR — SPKR (39)
SMB_CLK0 — L19 — MCP_SMB_SCL_R — MCP_SMB_SCL_R (15)
SMB_DATA0 — K19 — MCP_SMB_SDA_R — MCP_SMB_SDA_R (15)
SMB_CLK1-MSMB_CLK — G21 — MCP_MEM_LCD_CLK — MCP_MEM_LCD_CLK (26)
SMB_DATA1-MSMB_DATA — F21 — MCP_MEM_LCD_DAT — MCP_MEM_LCD_DAT (26)
SMB_ALERT-GPIO_64* — M23 — SMB_ALERT# — R144 2.7K_F — +3.3V_RUN
FANRPM0-GPIO_60 — B12 — PCIE_MCARD1_DET# (30)
FANCTL0-GPIO_61 — A12 — USB_MCARD1_DET# (30)
FANRPM1-GPIO_63 — D12 — PCIE_MCARD2_DET# (31)
FANCTL1-GPIO_62 — C12 — USB_MCARD2_DET# (31)
Remember to connect to Power circuit
CPUVDD_EN — D17 — CPUVDD_EN (45)
SPI_CS0-GPIO_10 — C14 — PCIE_MCARD3_DET# (31)
SPI_CLK-GPIO_11 — D13 — SPI_CLK — R199 0 — USB_MCARD3_DET# (31)
SPI_DI-GPIO_8 — C15 — MCP_EXT_SCI# (33)
SPI_DO-GPIO_9 — B14 — SPI_DO
SUS_CLK-GPIO_34 — B18 — 32KHZ_OUT (32)
BUF_SIO_CLK — AE7 — PAD T26
TEST_MODE_EN — K22
PKG_TEST — L22 — R157 1K

MCP79-SLI

+3.3V_SUS — R139 *10K_NC — For MCP79 A01

C649 0.1U/10V

MCP79 Strapping

+3.3V_SUS — R112 *10K_NC — HDA_SDATA_OUT_R — R114 10K
+3.3V_RUN — R113 *10K_NC — (12) LPC_FRAME#_C — R115 10K

Boot BIOS Strapping	HDA_SDATA_OUT	LPC_FRAME#
LPC BIOS	0	0
PCI BIOS	0	1
SPI BIOS(CS0)	1	0
SPI BIOS(CS1)	1	1

+3.3V_SUS — R136 2.7K_F, R137 2.7K_F — MCP_SMB_SCL_R, MCP_SMB_SDA_R
+3.3V_RUN — R145 2.2K, R146 2.2K — MCP_MEM_LCD_CLK, MCP_MEM_LCD_DAT

MCP79 Strapping

HDA_SYNC — R130 10K

SIO Clock Select	HDA_SYNC
14.318MHz	0
24MHz	1

+3.3V_SUS — R125 10K — HDA_RESET#

MCP79 Strapping

+3.3V_SUS — R148 *10K_NC — SPI_DO — R152 10K
+3.3V_SUS — R149 10K — SPI_CLK — R153 *10K_NC

SPI CLK Frequency Select	SPI_DO	SPI_CLK
31MHz	0	0
41MHz	0	1
25MHz	1	0
1MHz	1	1

+RTC_CELL — R159 49.9K_F — RTC_RST# — R163 *0_NC

CLEAR CMOS ONLY	RTC_RST#
CLEAR	0
NORMAL	1

25MHz Clock

XTALIN — R160 0 — Y1 25MHz_12PF — XTALOUT — C183 12P/50V, C184 12P/50V

32KHz Clock

XTALIN_RTC — R161 0 — W1 32.768KHz_12.5PF — XTALOUT_RTC — C185 15P/50V, C186 15P/50V

Layout Notice:
Place cystal within 1000 mil of MCP79.

MCP79 Strapping

+3.3V_SUS — R162 *10K_NC — SPKR — R164 10K

Boot Mode Select	
User Mode	0
Safe Mode	1

MCP79 Strapping

+3.3V_RMGT — R151 10K — (11,40) RGMII_TXD0 — R158 *10K_NC

Networking Select	
MII	0
RGMII	1

Title	MCP79_H (HDA,MISC)
Size	
Document Number	Dell/FLEX Confidential
Rev	A00
Date:	Thursday, March 12, 2009
Sheet	14 of 61

WWW.AliSaler.Com

WWW.AliSaler.Com

17.756A with RUN rail for S0
2850mA for S0 Idle

1 x 10uF ceramic
2 x 2.2uF X5R ceramic
3 x 1uF X5R ceramic
3 x 0.22uF X5R ceramic
12 x 0.1uF X7R ceramic

+MCP_CORE

C190 10U/10V_0805 CAP0805
C191 2.2U/16V_0603 CAP0603
C192 1U/6.3V
C193 1U/6.3V
C194 1U/6.3V
C198 2.2U/16V_0603 CAP0603
C199 0.22U/10V
C200 0.22U/10V
C201 0.22U/10V
C203 0.1U/10V
C189 0.1U/10V
C205 0.1U/10V
C206 0.1U/10V
C207 0.1U/10V
C211 0.1U/10V
C212 0.1U/10V
C213 0.1U/10V
C215 0.1U/10V
C216 0.1U/10V
C434 0.1U/10V
C433 0.1U/10V
C438 0.1U/10V
C435 0.1U/10V
C437 0.1U/10V

U2J

PWR

+VTT_CPU
1139mA for ALW rail

+VTT_CPUCLK
43mA for ALW rail

1 x 10uF ceramic
1 x 2.2uF X5R ceramic
3 x 0.1uF X7R ceramic

+1.05V_VCCP

C195 0.1U/10V
C196 2.2U/16V_0603 CAP0603
C197 10U/10V_0805 CAP0805
C202 0.1U/10V
C208 0.1U/10V
C209 0.1U/10V
C210 0.1U/10V
C218 0.1U/10V
C219 0.1U/10V
C314 0.1U/10V
C422 0.1U/10V
C423 0.1U/10V

+3.3V_RUN_MCP
450mA with RUN rail

1 x 4.7uF X5R ceramic
4 x 0.1uF X7R ceramic

JP5 SHORT_PAD
+3.3V_RUN
C220 0.1U/10V
C221 0.1U/10V
C222 0.1U/10V
C223 0.1U/10V
C224 4.7U/6.3V_0603 CAP0603

JP6 SHORT_PAD
+3.3V_SUS
C225 0.1U/10V
C226 4.7U/6.3V_0603 CAP0603

+3.3V_DUAL
16mA with ALW rail

1 x 4.7uF X5R ceramic
1 x 0.1uF X7R ceramic

+3.3V_DUAL_USB
450mA with ALW rail

JP7 SHORT_PAD
+1.05V_SUS
C230 0.1U/10V
C231 0.1U/10V

+VDD_AUXC
105mA with ALW rail

2 x 0.1uF X7R ceramic

These are for backdrive issue.

+3.3V_RUN
R165 2.7K_F
R166 2.7K_F
(14) MCP_SMB_SCL_R
MCP_SMB_SCL
MCP_SMB_SCL (30,31,39)
Q6 2N7002W-7-F
(14) MCP_SMB_SDA_R
MCP_SMB_SDA
MCP_SMB_SDA (30,31,39)
Q7 2N7002W-7-F

HDCP

+3.3V_RUN
R167 *10K_NC
R168 *10K_NC
R169 *10K_NC
U4 *AT24C16BN-SH-T_NC
NC_1 NC_2 NC_3 VCC M1 SDA SCL WP GND
MCP_SMB_SDA
MCP_SMB_SCL
C232 *0.1U/10V_NC

+RTC_CELL
C227 4.7U/6.3V_0603
C228 4.7U/6.3V_0603
C229 0.1U/10V MCP79-SLI
+VBAT

0.06mA with ALW rail for S0

2 x 4.7uF X5R ceramic
1 X 0.1uF X7R ceramc

Title	MCP79_I (POWER)
Size	
Document Number	Dell/FLEX Confidential
Rev	A00
Date:	Monday, March 09, 2009
Sheet	15 of 61

WWW.AliSaler.Com

WWW.AliSaler.Com

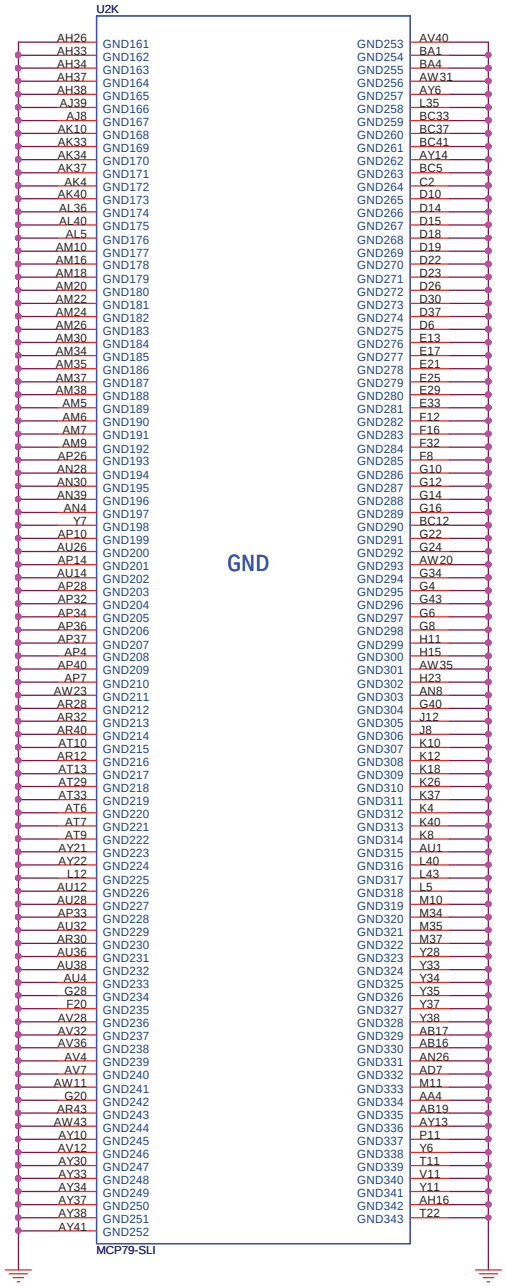

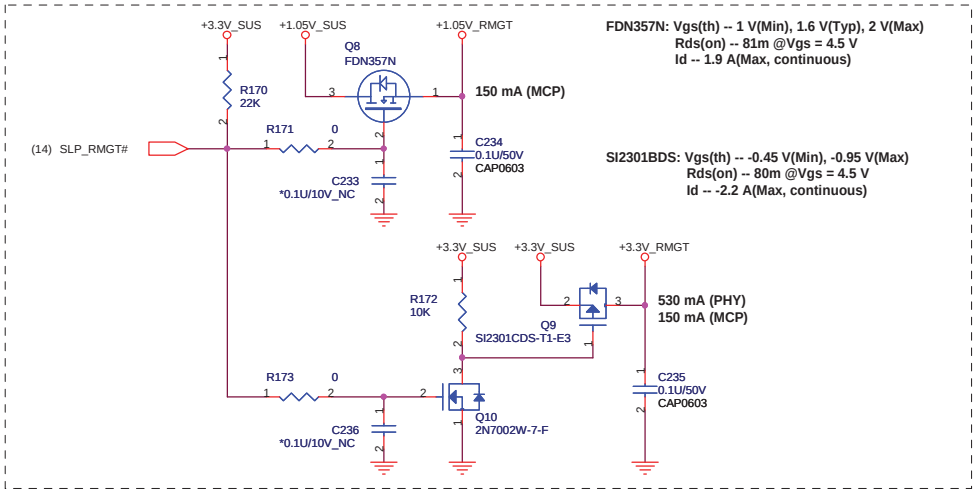

Title	MCP79_J (GND)	
Size	Document Number: Dell/FLEX Confidential	Rev A00
Date: Monday, March 09, 2009	Sheet 16 of 61	

WWW.AliSaler.Com

WWW.AliSaler.Com

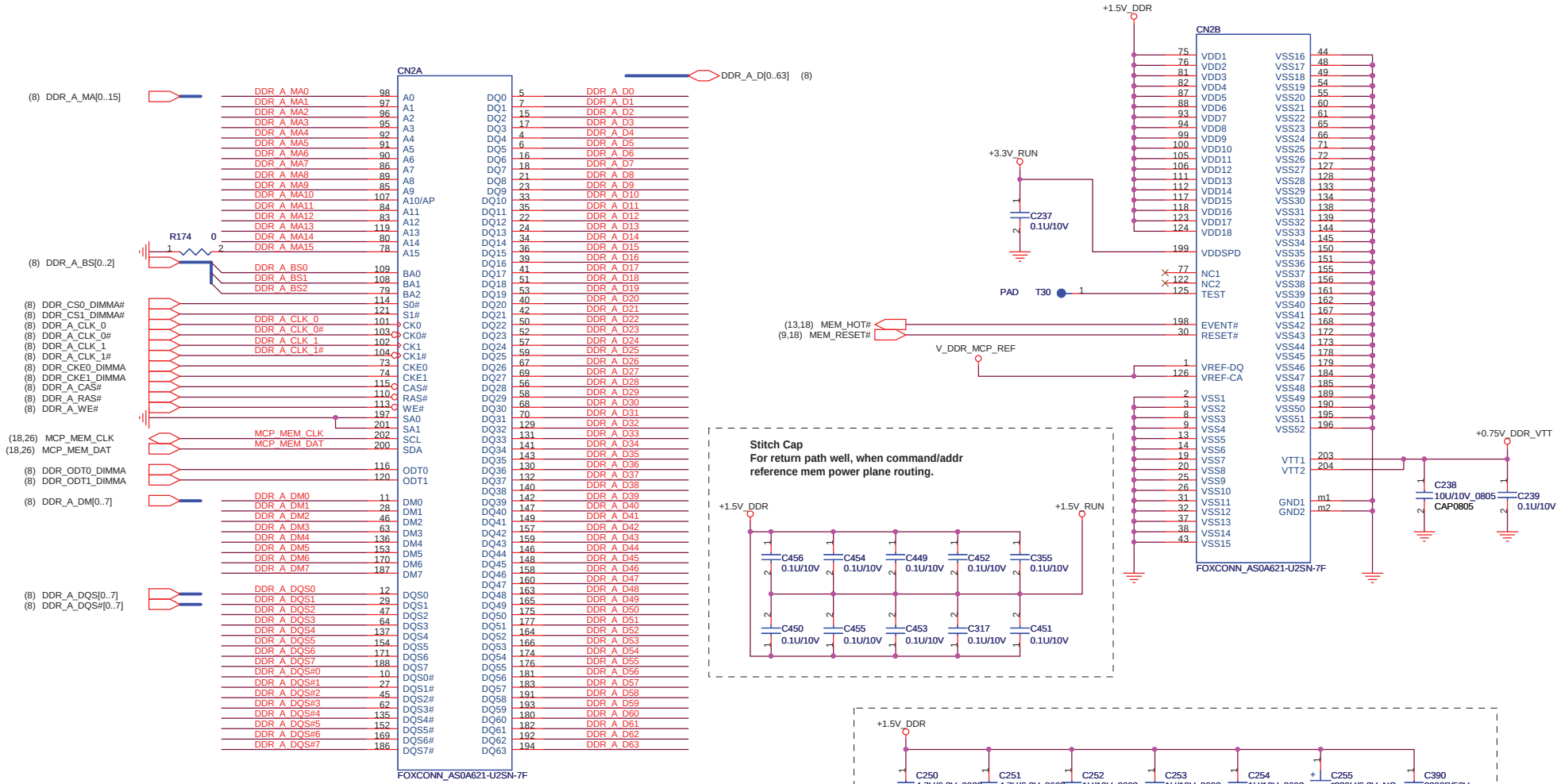

3/21 Neo: Update symbol.

SM_MEM BUS ADDRESS	
SO-DIMM0	1010 000
SO-DIMM1	1010 001

For EMI Reserved

DDR_A_CLK_1 R178 *200_F_NC DDR_A_CLK_1#
DDR_A_CLK_0 R177 *200_F_NC DDR_A_CLK_0#

Place ESD Protection diodes.

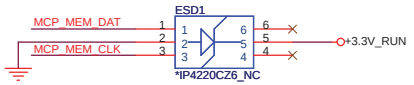

Title: **DDR3 SO-DIMM1(204P)**

Size | Document Number: **Dell/FLEX Confidential** | Rev: A00

Date: Thursday, March 12, 2009 | Sheet 17 of 61

WWW.AliSaler.Com

WWW.AliSaler.Com

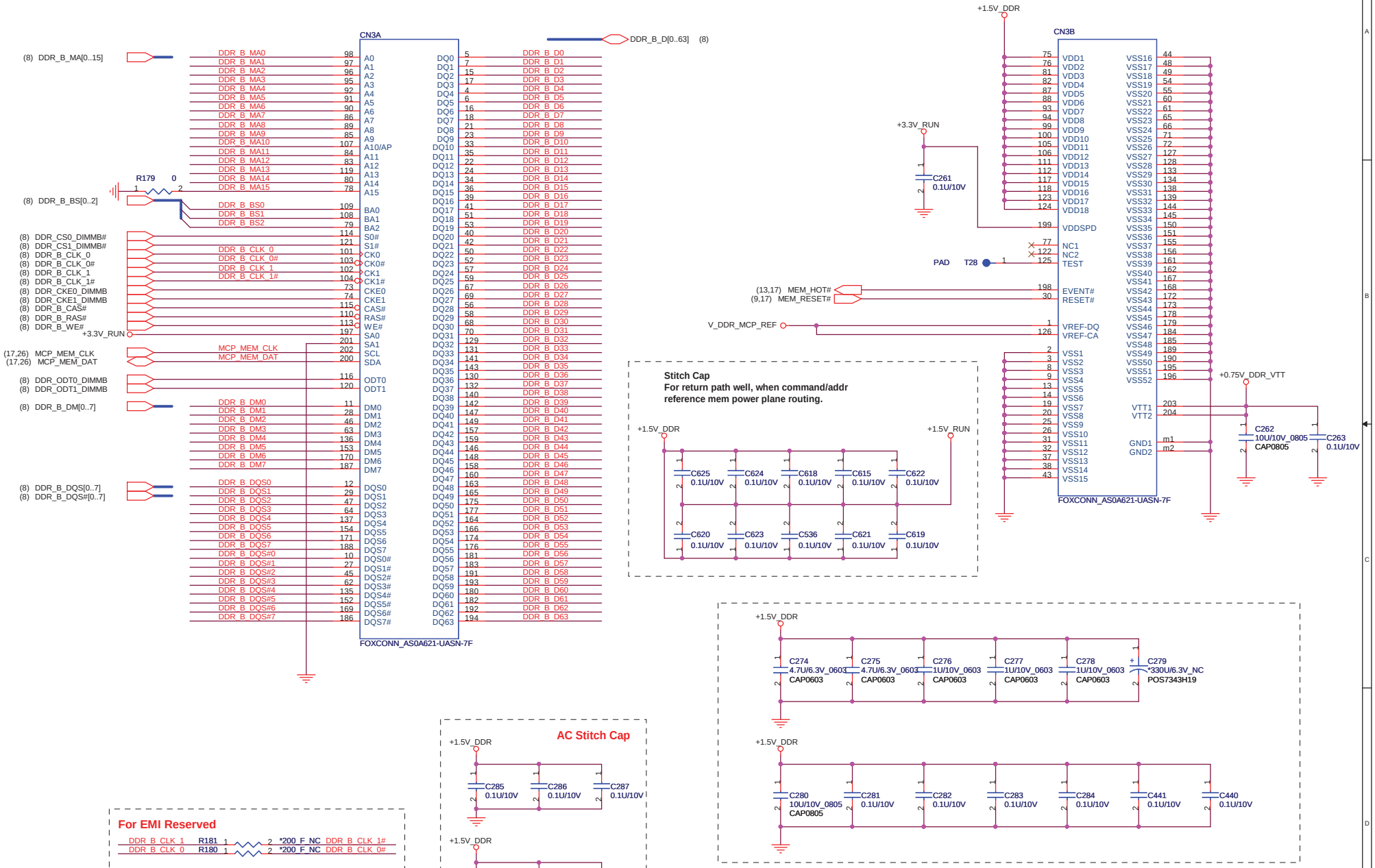

Title
DDR3 SO-DIMM2(204P)

Size | Document Number | Rev
Dell/FLEX Confidential | A00

Date: Thursday, March 12, 2009 | Sheet 18 of 61

WWW.AliSaler.Com

WWW.AliSaler.Com

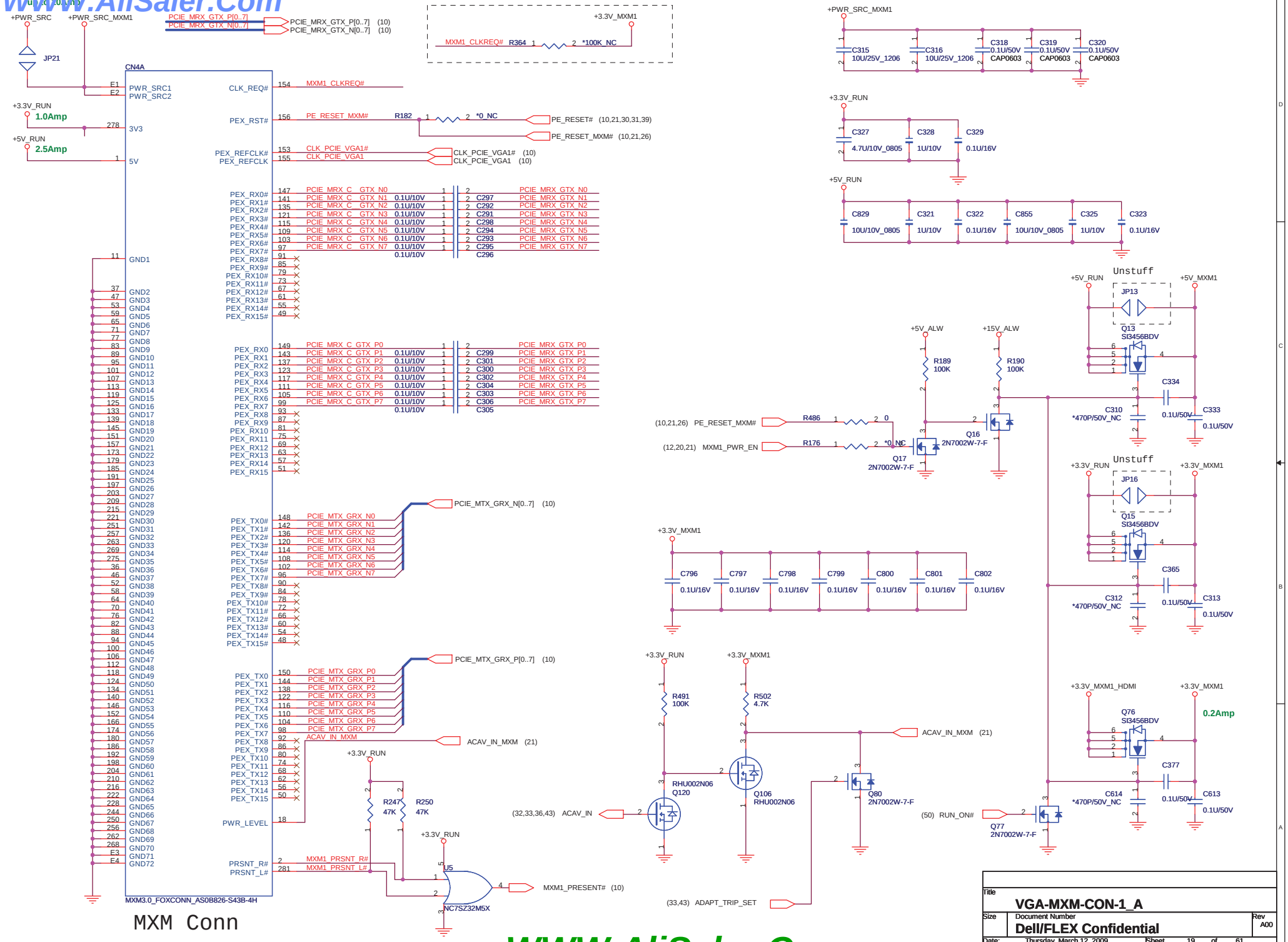

Title	VGA-MXM-CON-1_A
Size	
Document Number	Dell/FLEX Confidential
Rev	A00
Date:	Thursday, March 12, 2009
Sheet	19 of 61

WWW.AliSaler.Com

WWW.AliSaler.Com

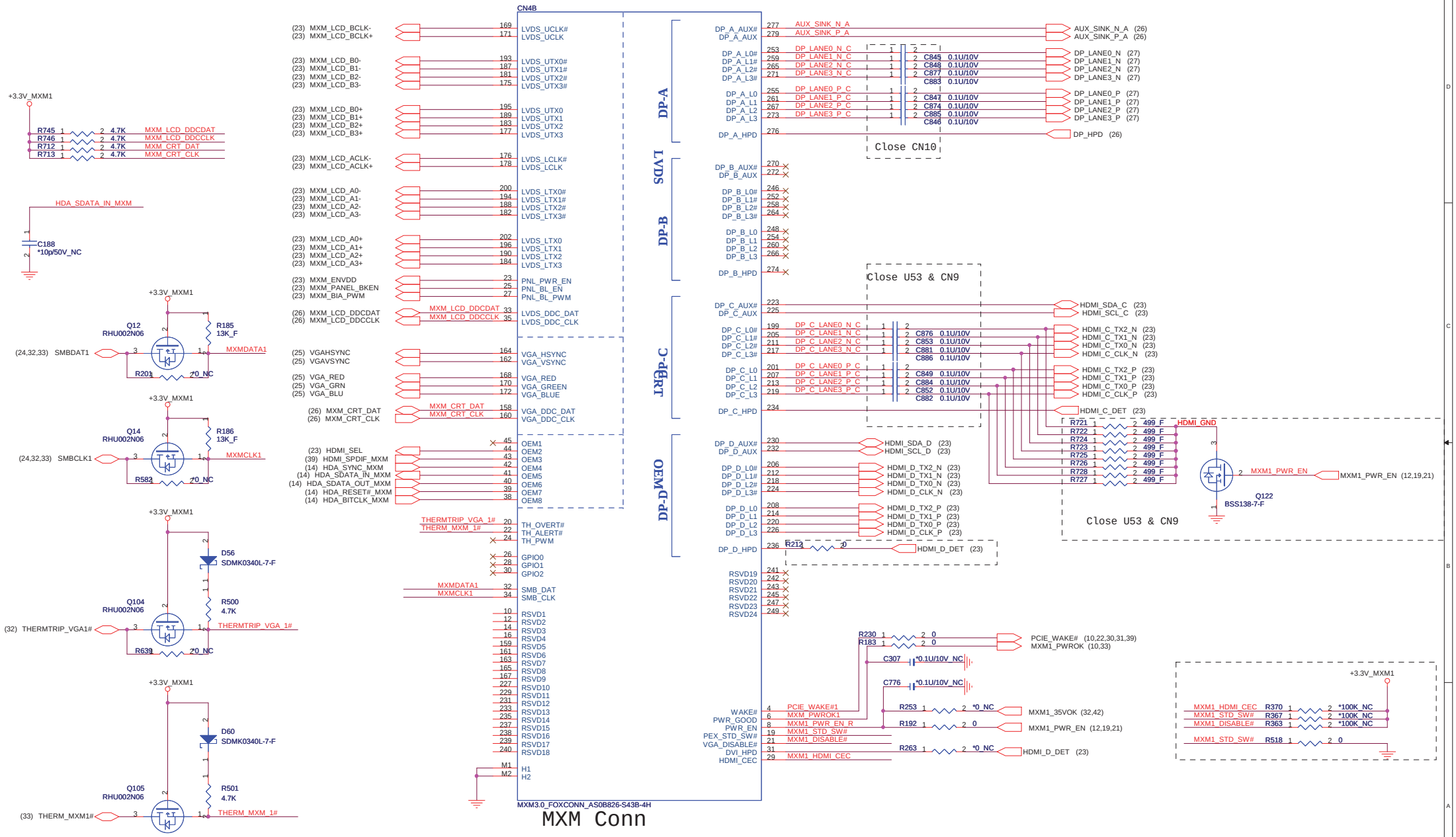

Title	VGA-MXM-CON-1_B
Size	Document Number: Dell/FLEX Confidential
Rev	A00
Date: Monday, March 09, 2009	Sheet 20 of 61

WWW.AliSaler.Com

WWW.AliSaler.Com

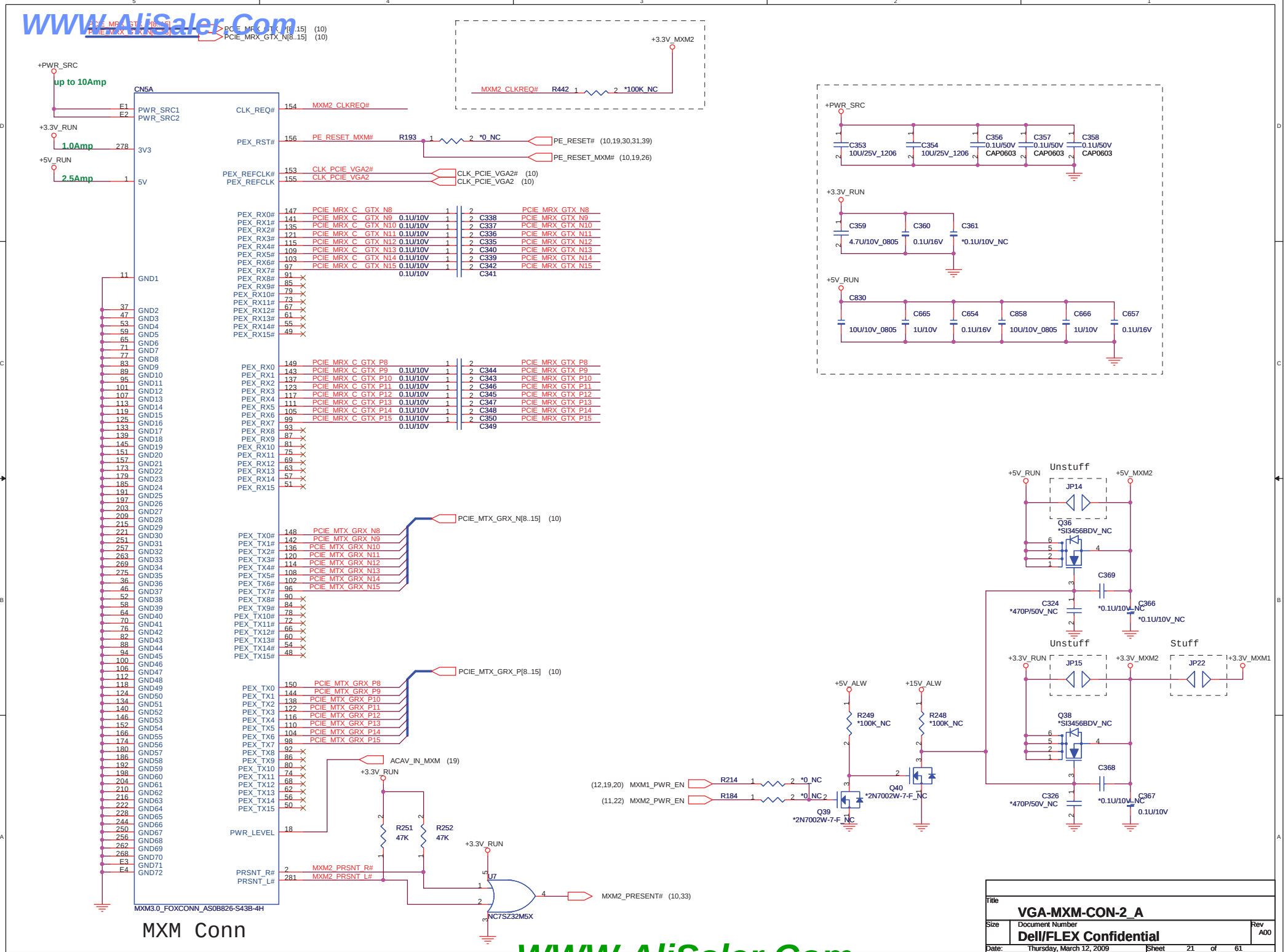

Title
VGA-MXM-CON-2_A
Size
Document Number
Dell/FLEX Confidential
Rev A00
Date: Thursday, March 12, 2009
Sheet 21 of 61

WWW.AliSaler.Com

WWW.AliSaler.Com

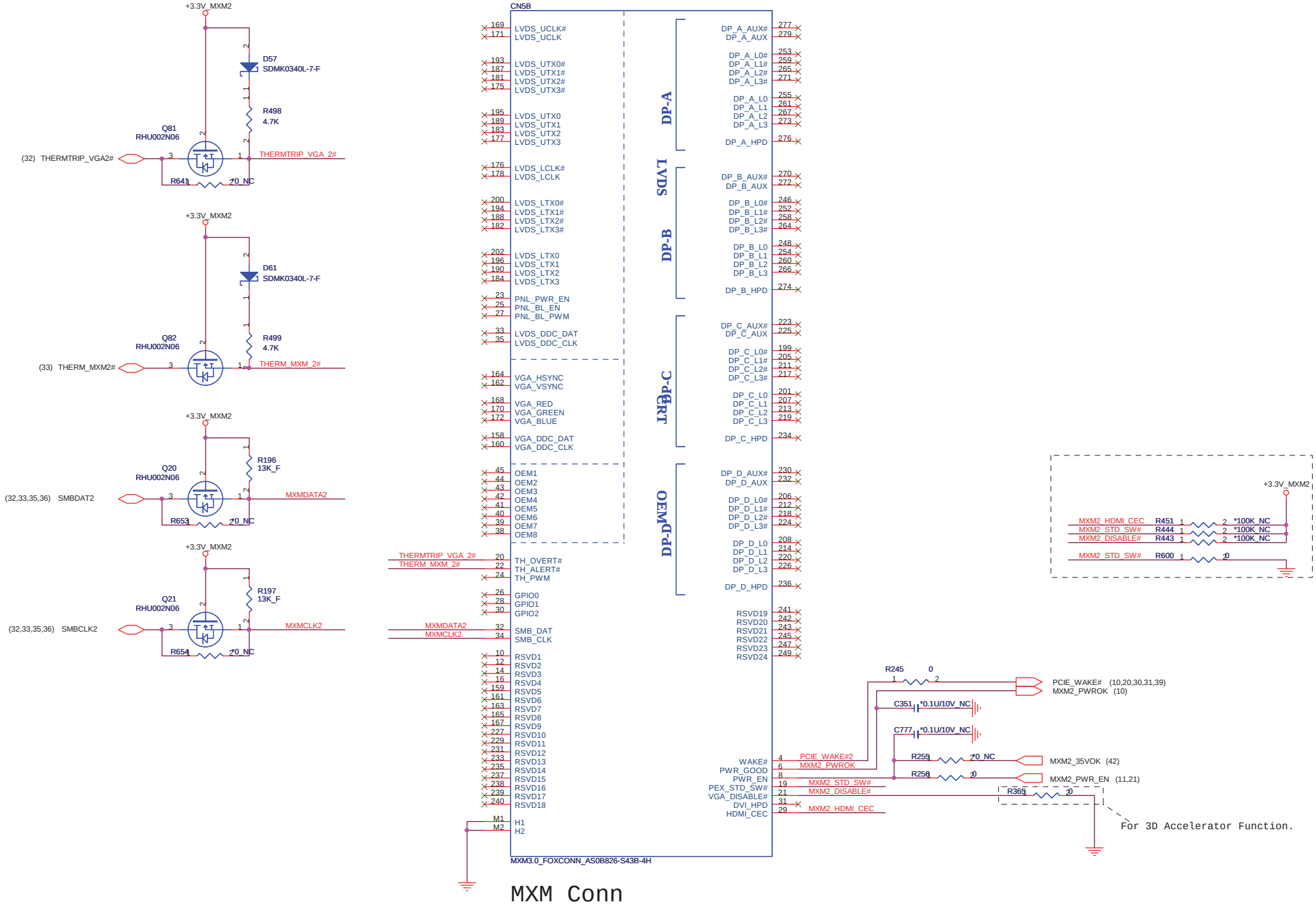

MXM Conn

Title	VGA-MXM-CON-2_B
Size	Document Number: Dell/FLEX Confidential
Rev	A00
Date:	Monday, March 09, 2009
Sheet	22 of 61

WWW.AliSaler.Com

WWW.AliSaler.Com

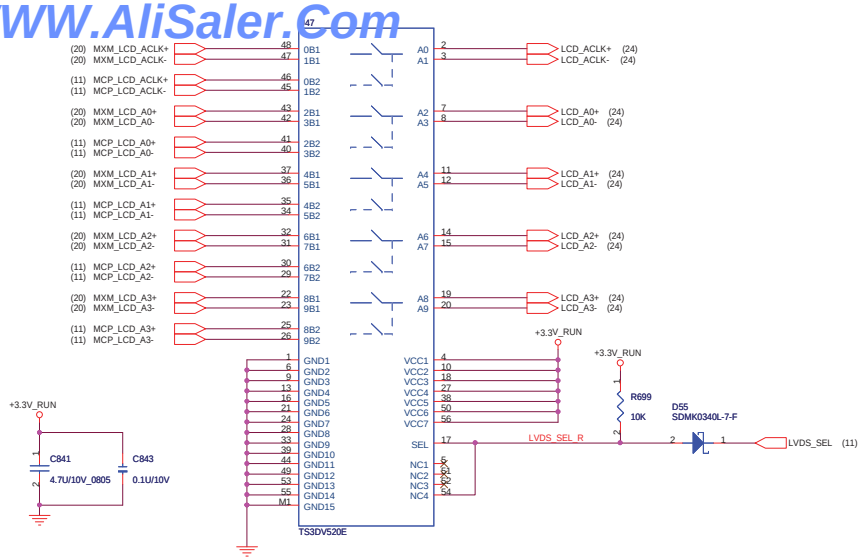

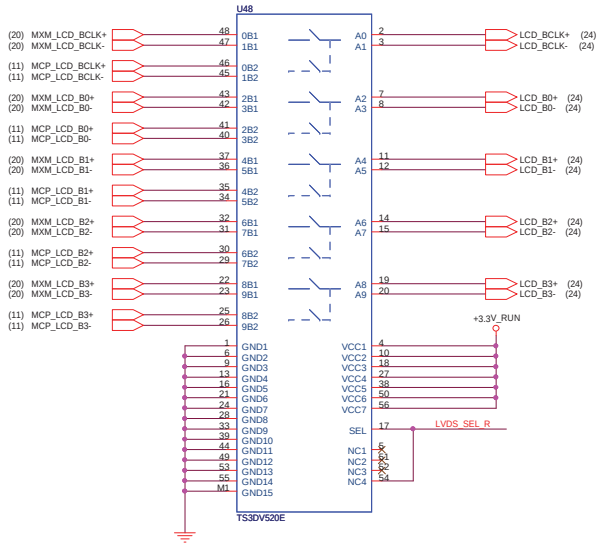

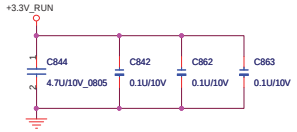

MCP_LVDS_SEL	LVDS SOURCE
L	MXM
H	MCP

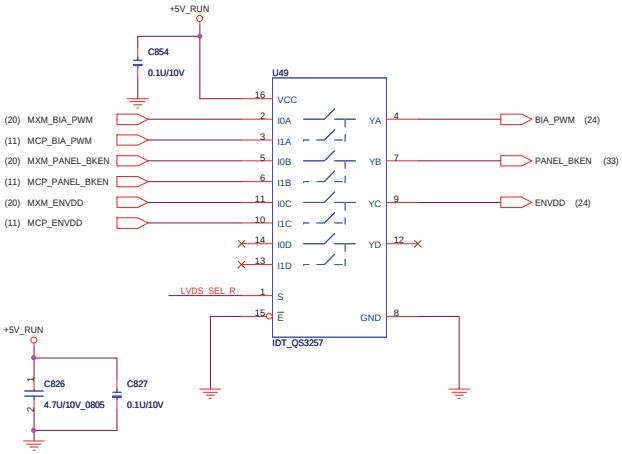

HDMI PORT C&D MUX

Close CN9

CONTROL BITS		I/O SELECTED		HOT PLUG DETECT STATUS	
S2	S1 (OEM)	Y/Z	SCL_SINK SDA_SINK	HPD1	HPD2
H	H	A1/B1	SCL1 SDA1	HPD_SINK	L
				For NB-9EGT	
H	L	A2/B2	SCL2 SDA2	L	HPD_SINK
				For NB-9EGTX	

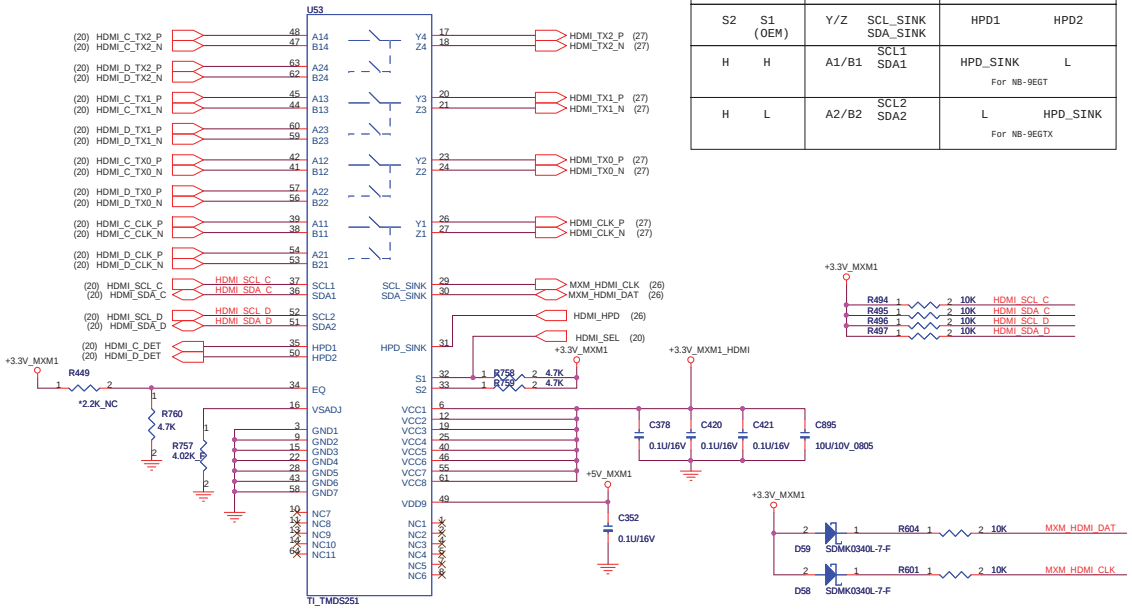

Title	LVDS/ HDMI SELECTION
Size	
Document Number	Dell/FLEX Confidential
Rev	A00
Date:	Monday, March 09, 2009
Sheet	23 of 61

WWW.AliSaler.Com

WWW.AliSaler.Com

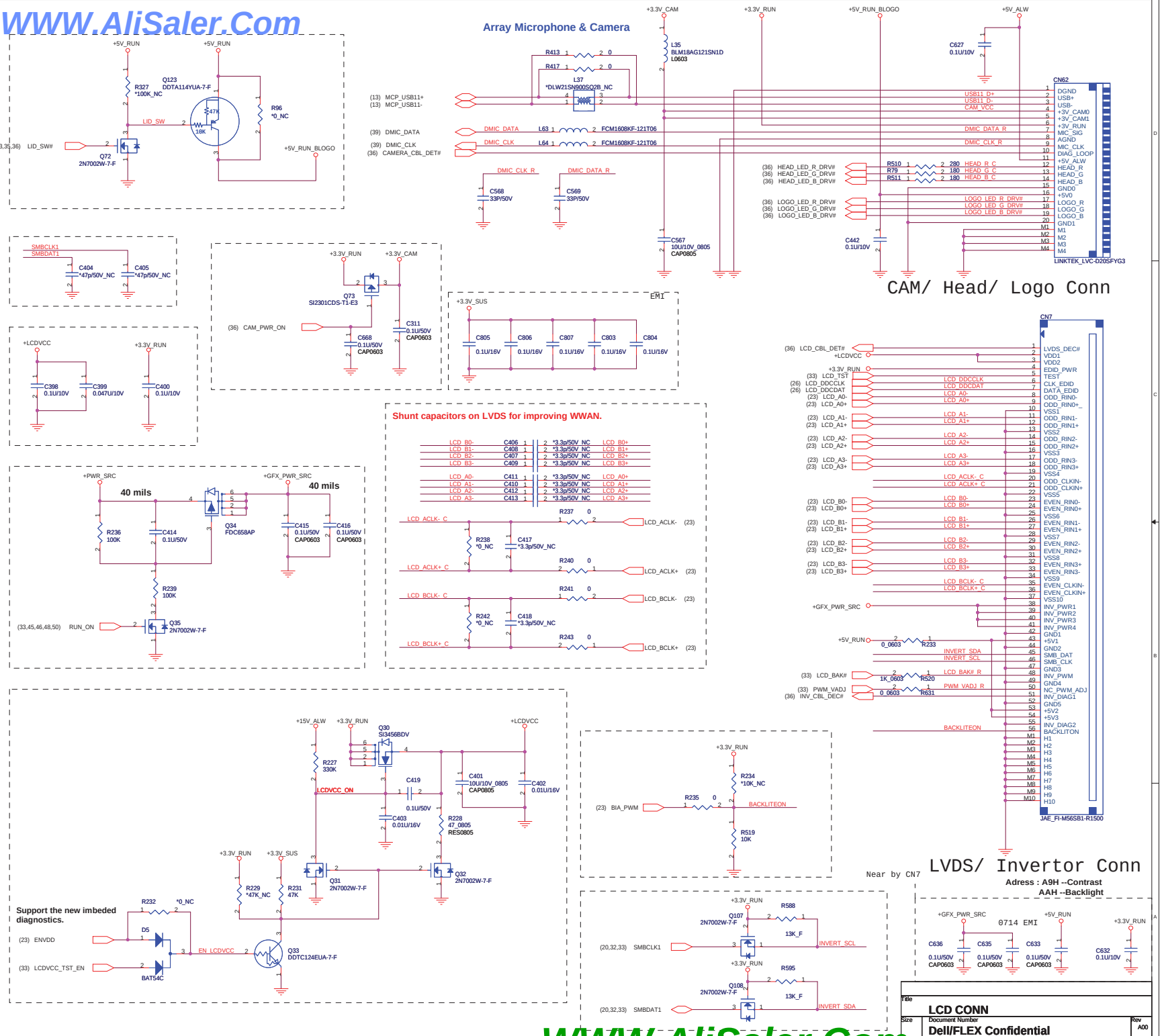

WWW.AliSaler.Com

WWW.AliSaler.Com

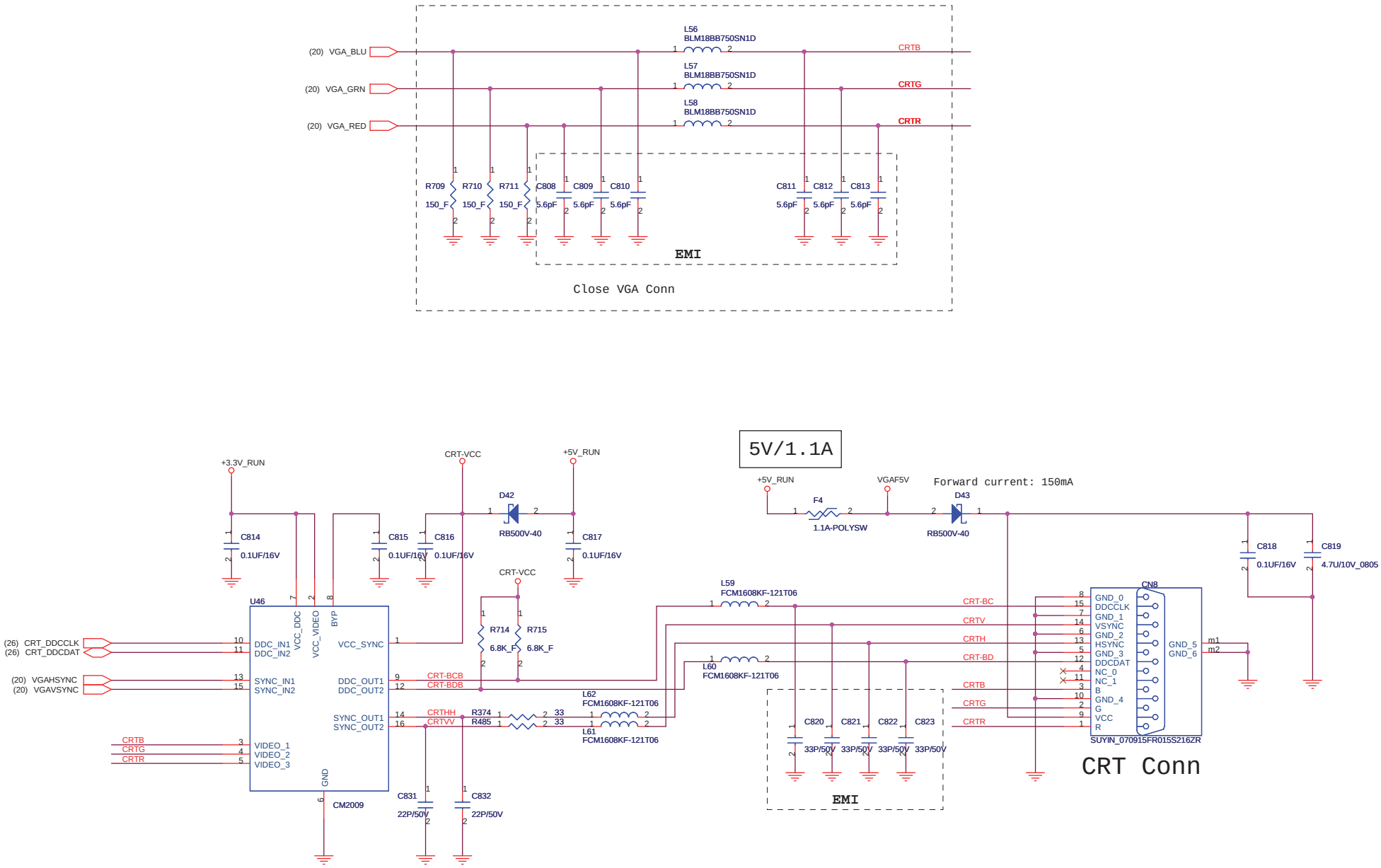

Title	CRT CONN
Size	
Document Number	Dell/FLEX Confidential
Rev	A00
Date:	Monday, March 09, 2009
Sheet	25 of 61

WWW.AliSaler.Com

WWW.AliSaler.Com

MXM/MCP LVDS DDC MUX

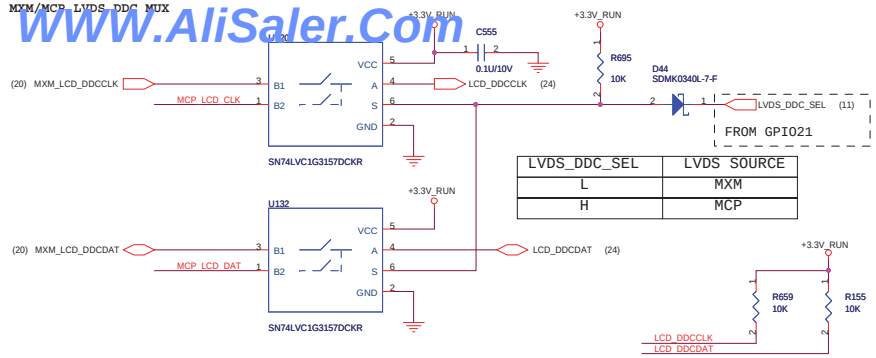

LVDS_DDC_SEL	LVDS SOURCE
L	MXM
H	MCP

MXM DP AUX/DDC MUX

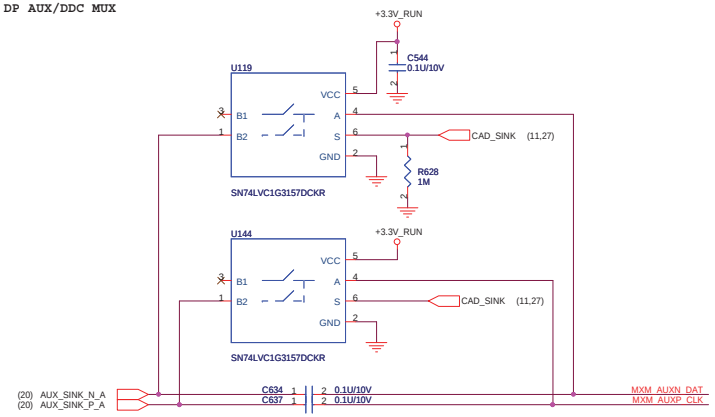

CAD_SINK	SOURCE
L	A=B1(AC couple)
H	A=B2 (DDC)

MXM/MCP VGA DDC MUX

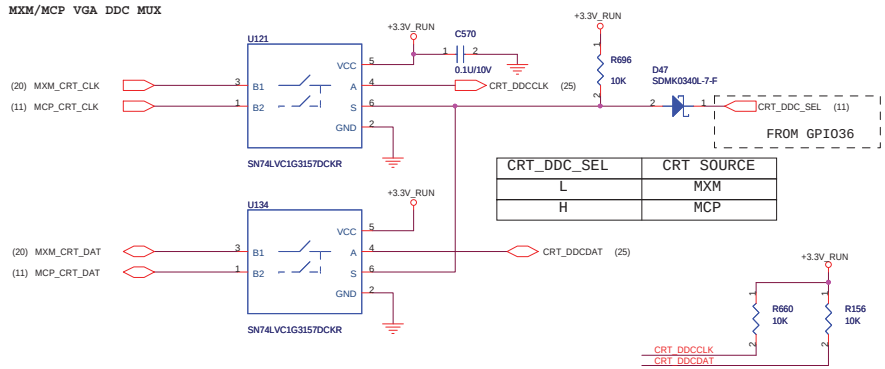

CRT_DDC_SEL	CRT SOURCE
L	MXM
H	MCP

MXM/MCP HDMI DDC MUX

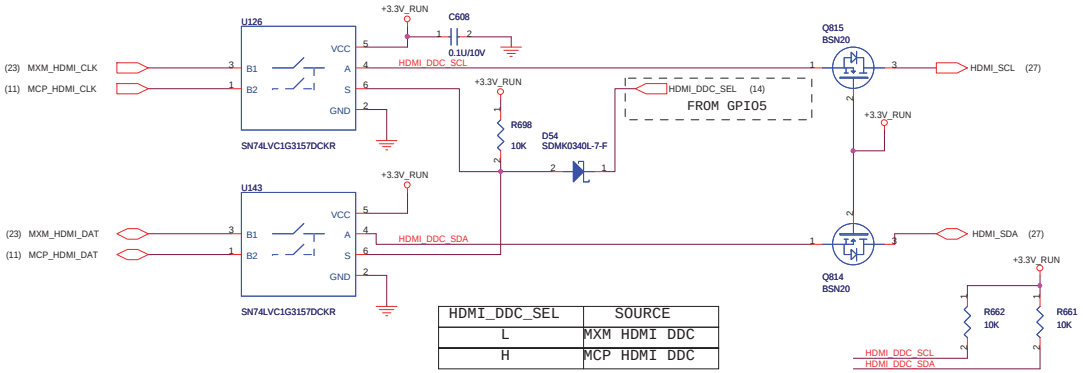

HDMI_DDC_SEL	SOURCE
L	MXM HDMI DDC
H	MCP HDMI DDC

MCP AUX/DDC MUX

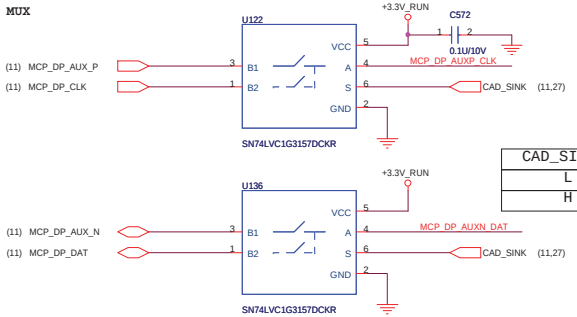

CAD_SINK	SOURCE
L	MCP AUX
H	MCP DDC

MCP MEM& LVDS SMBus MUX

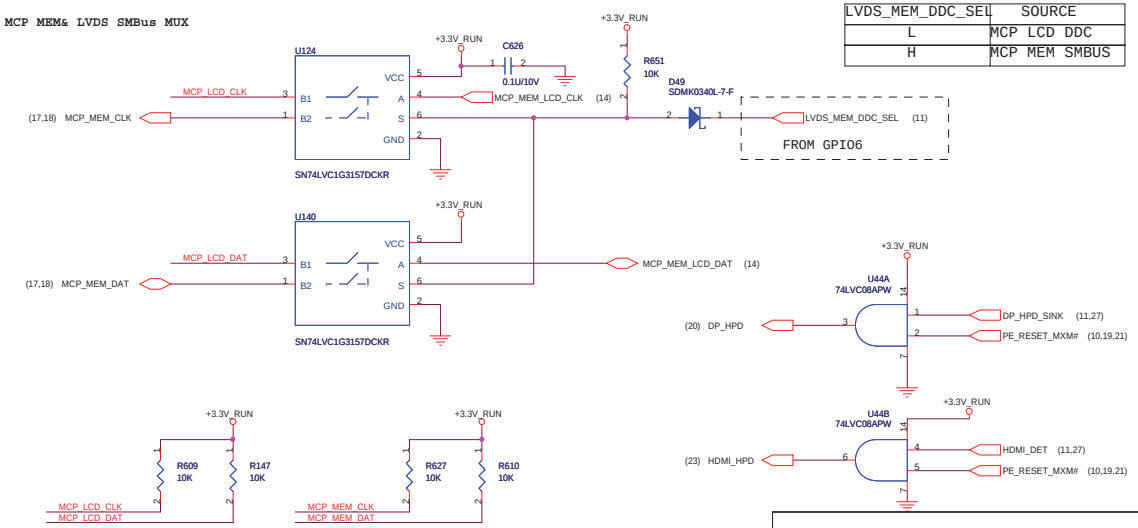

LVDS_MEM_DDC_SEL	SOURCE
L	MCP LCD DDC
H	MCP MEM SMBUS

MXM/MCP DP AUX MUX

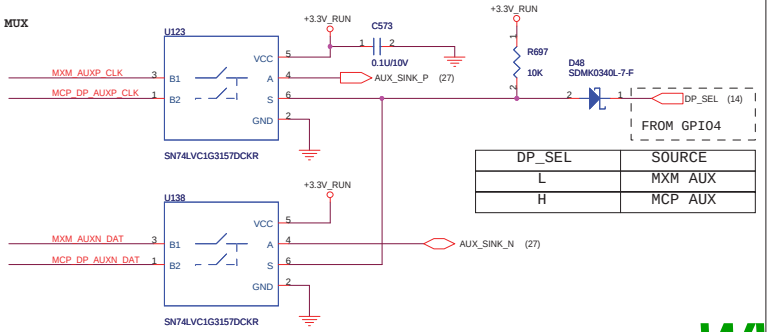

DP_SEL	SOURCE
L	MXM AUX
H	MCP AUX

Title	MXM& MCP DDC/ AUX MUX
Size	
Document Number	Dell/FLEX Confidential
Rev	A00
Date: Monday, March 09, 2009	Sheet 26 of 61

WWW.AliSaler.Com

WWW.AliSaler.Com

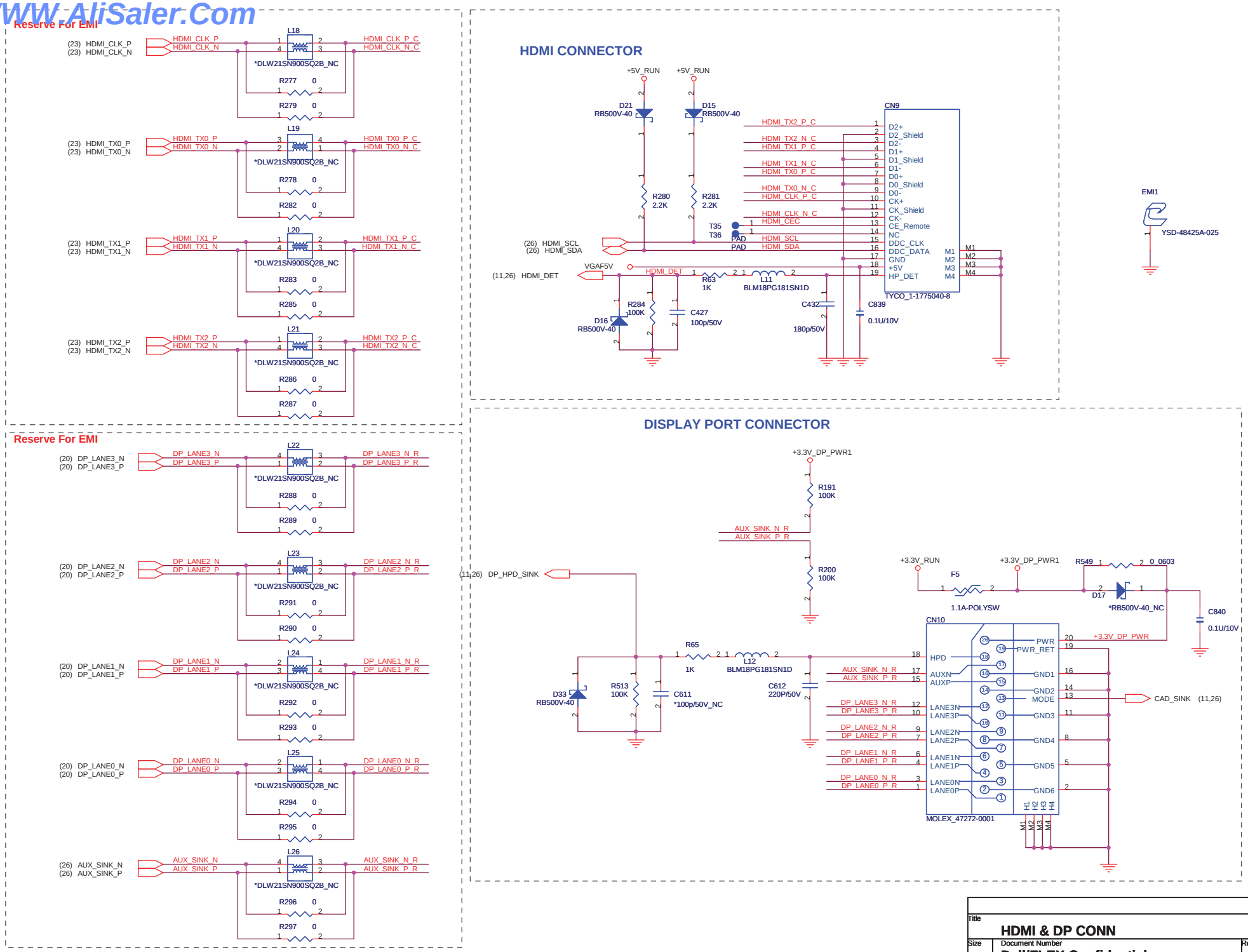

Title
HDMI & DP CONN

Size | Document Number | Rev
Dell/FLEX Confidential | A00

Date: Monday, March 09, 2009 | Sheet 27 of 61

WWW.AliSaler.Com

WWW.AliSaler.Com

USB POWER SW

Place one 150uF cap by each USB connector.

Each channel is 1A

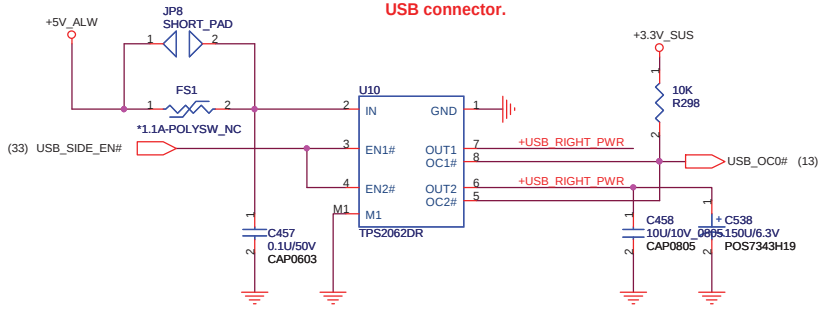

USB POWER SW

Place one 150uF cap by each USB connector.

Each channel is 1A

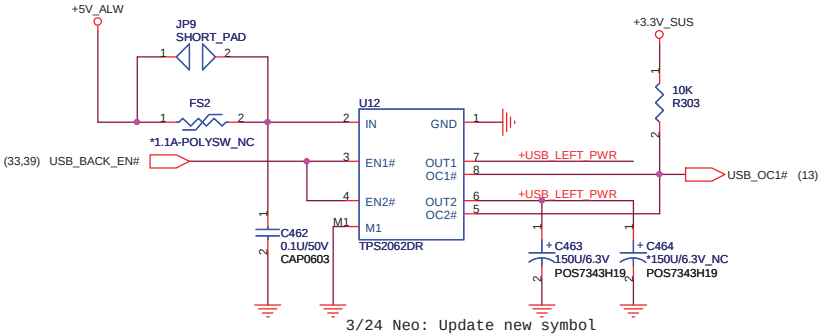

3/24 Neo: Update new symbol

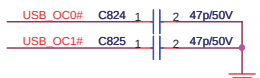

ESATA/B CONN

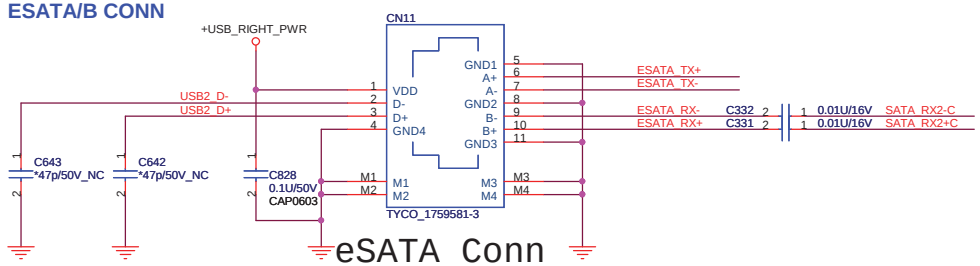

eSATA Conn

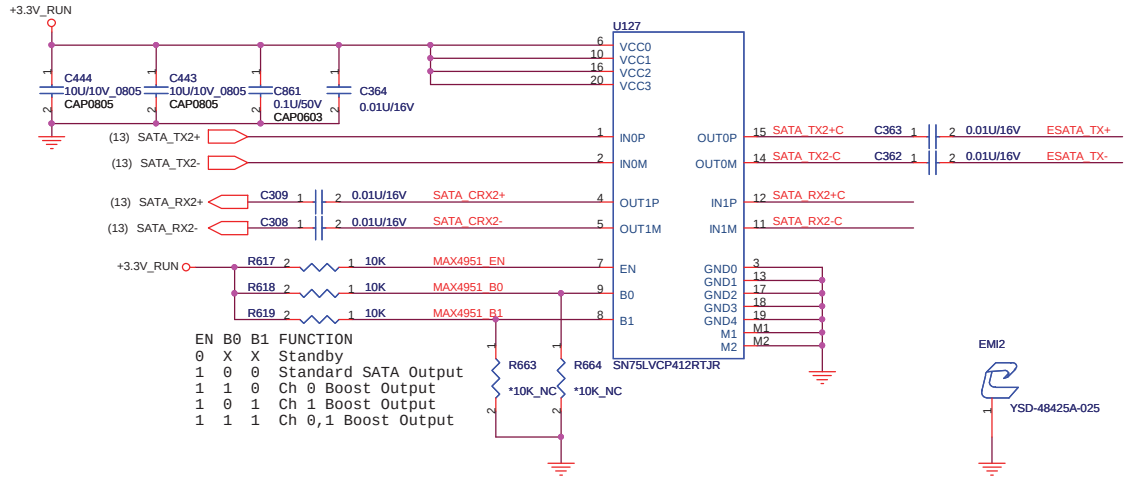

EN B0 B1 FUNCTION
0 X X Standby
1 0 0 Standard SATA Output
1 1 0 Ch 0 Boost Output
1 0 1 Ch 1 Boost Output
1 1 1 Ch 0,1 Boost Output

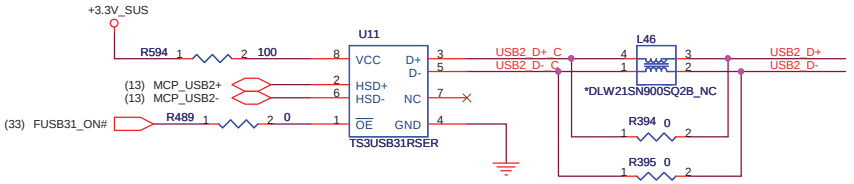

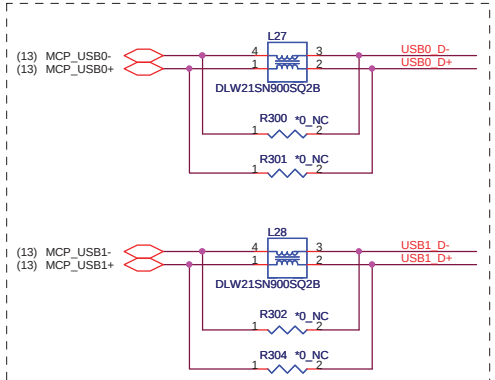

Platforms should put in PADS for the USB chokes if they have the room. Chokes should be NOPOP.

USB CONN

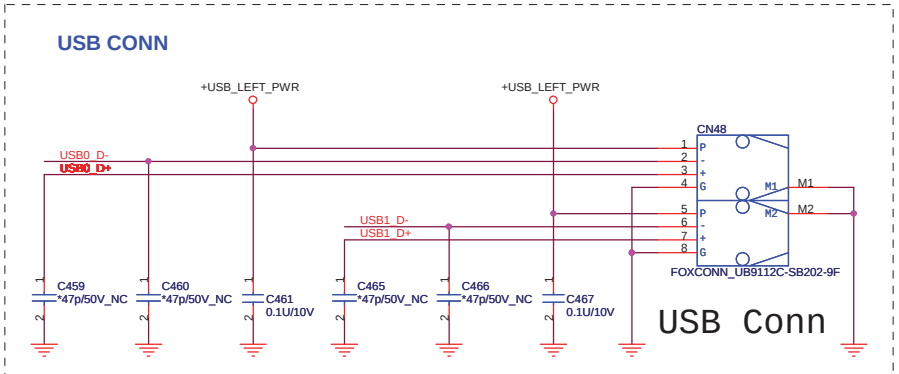

USB Conn

Place ESD diodes as close as USB connector.

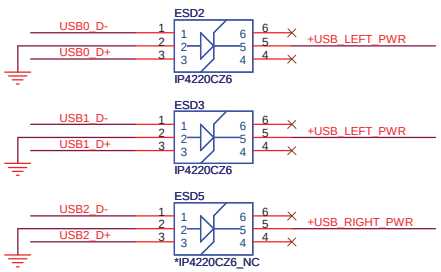

Title	USBx2 & eSATA
Size	Document Number: Dell/FLEX Confidential
Rev	A00
Date: Monday, March 09, 2009	Sheet 28 of 61

WWW.AliSaler.Com

WWW.AliSaler.Com

SATA Connector

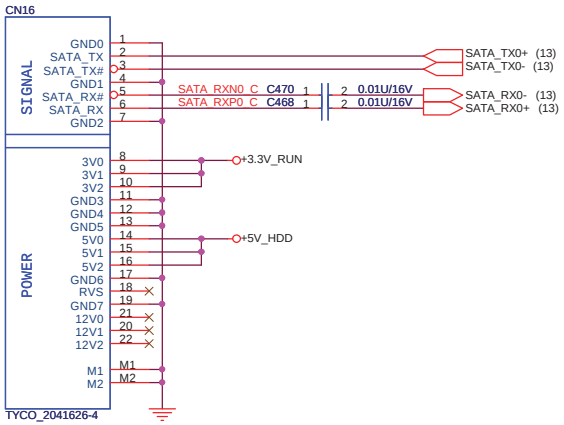

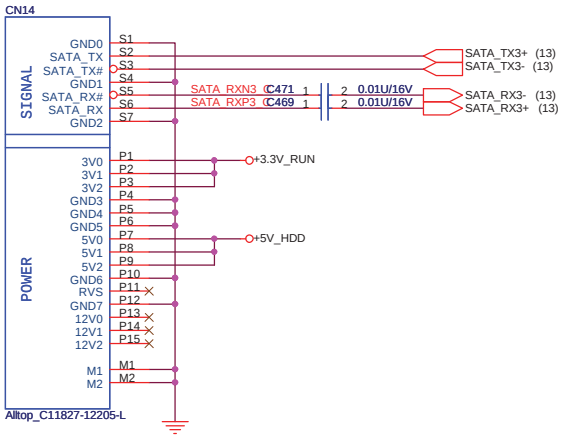

ODD Connector

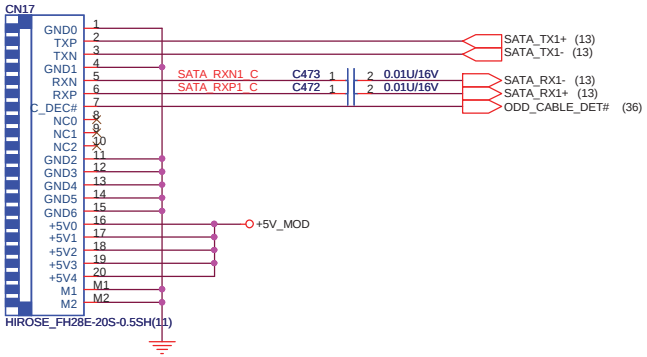

Master HDD Conn

Slave HDD Conn

ODD Conn

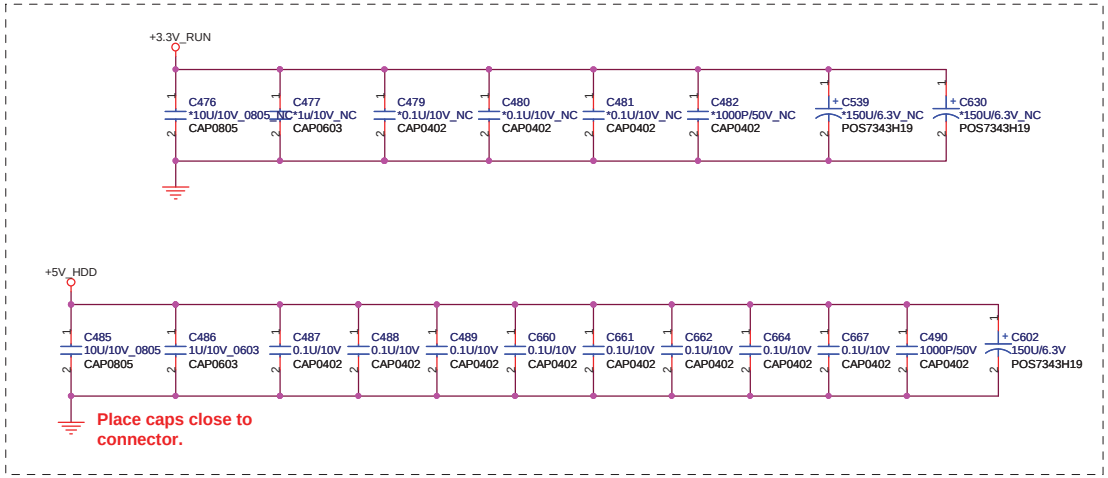

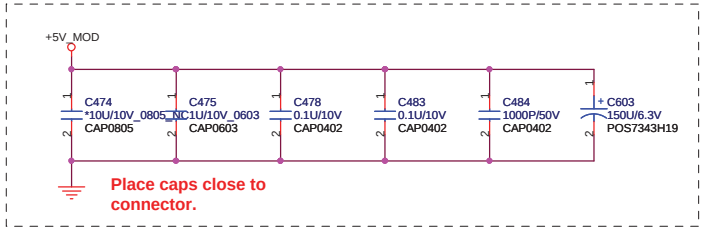

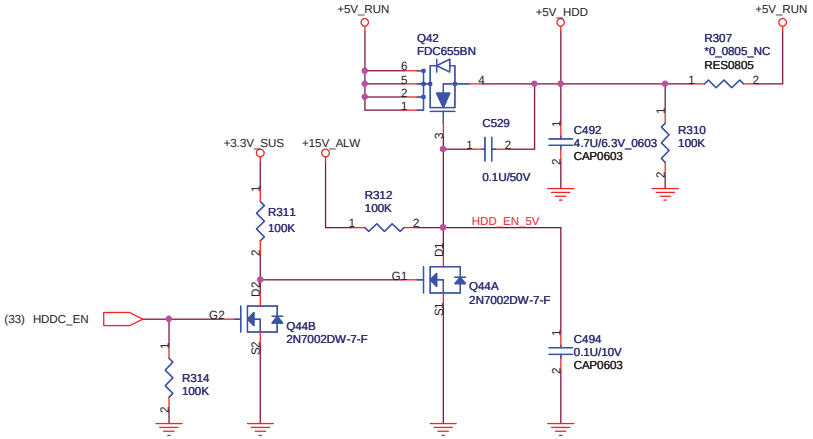

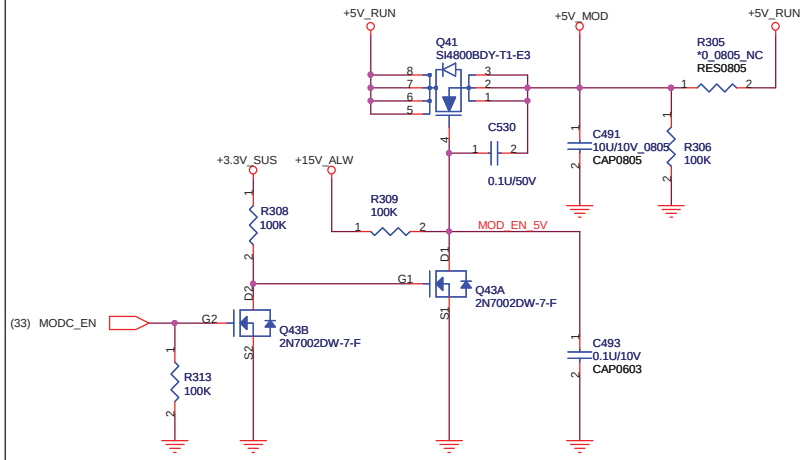

Title	HDDx2 & CD ROM
Size	Document Number: Dell/FLEX Confidential
Rev	A00
Date: Monday, March 09, 2009	Sheet 29 of 61

WWW.AliSaler.Com

WWW.AliSaler.Com

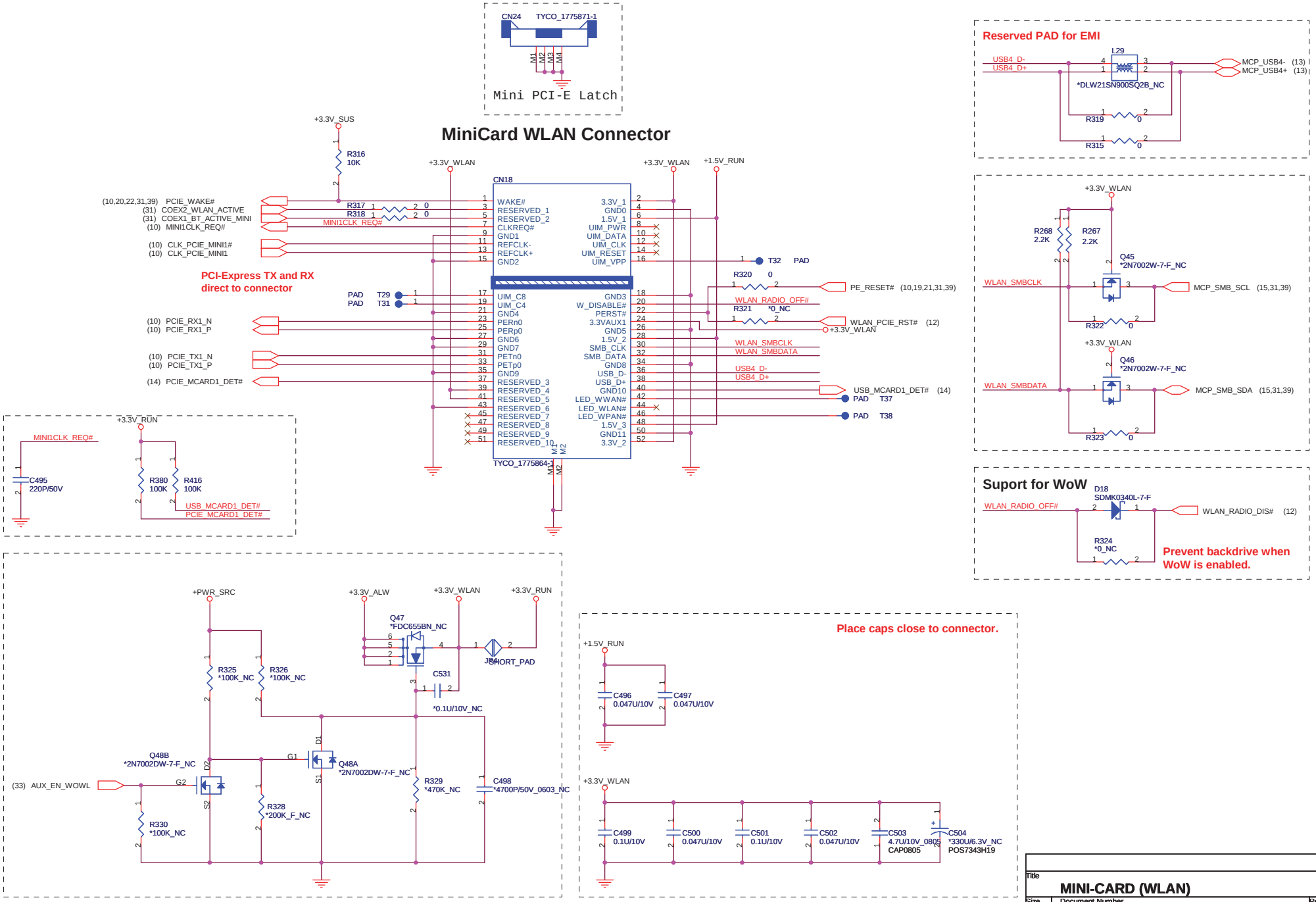

Title: MINI-CARD (WLAN)

Size | Document Number: Dell/FLEX Confidential | Rev A00

Date: Monday, March 09, 2009 | Sheet 30 of 61

WWW.AliSaler.Com

WWW.AliSaler.Com

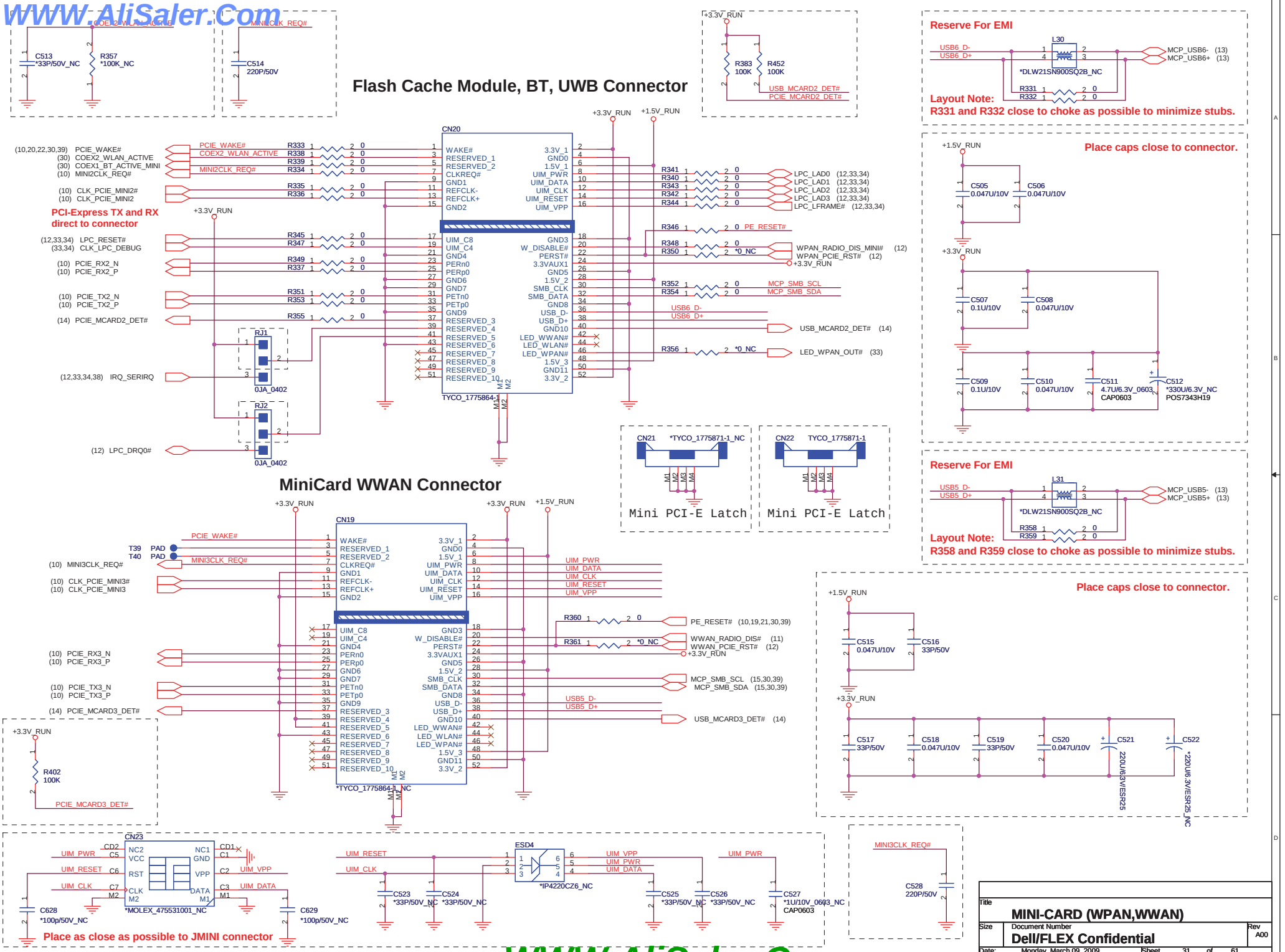

WWW.AliSaler.Com

WWW.AliSaler.Com

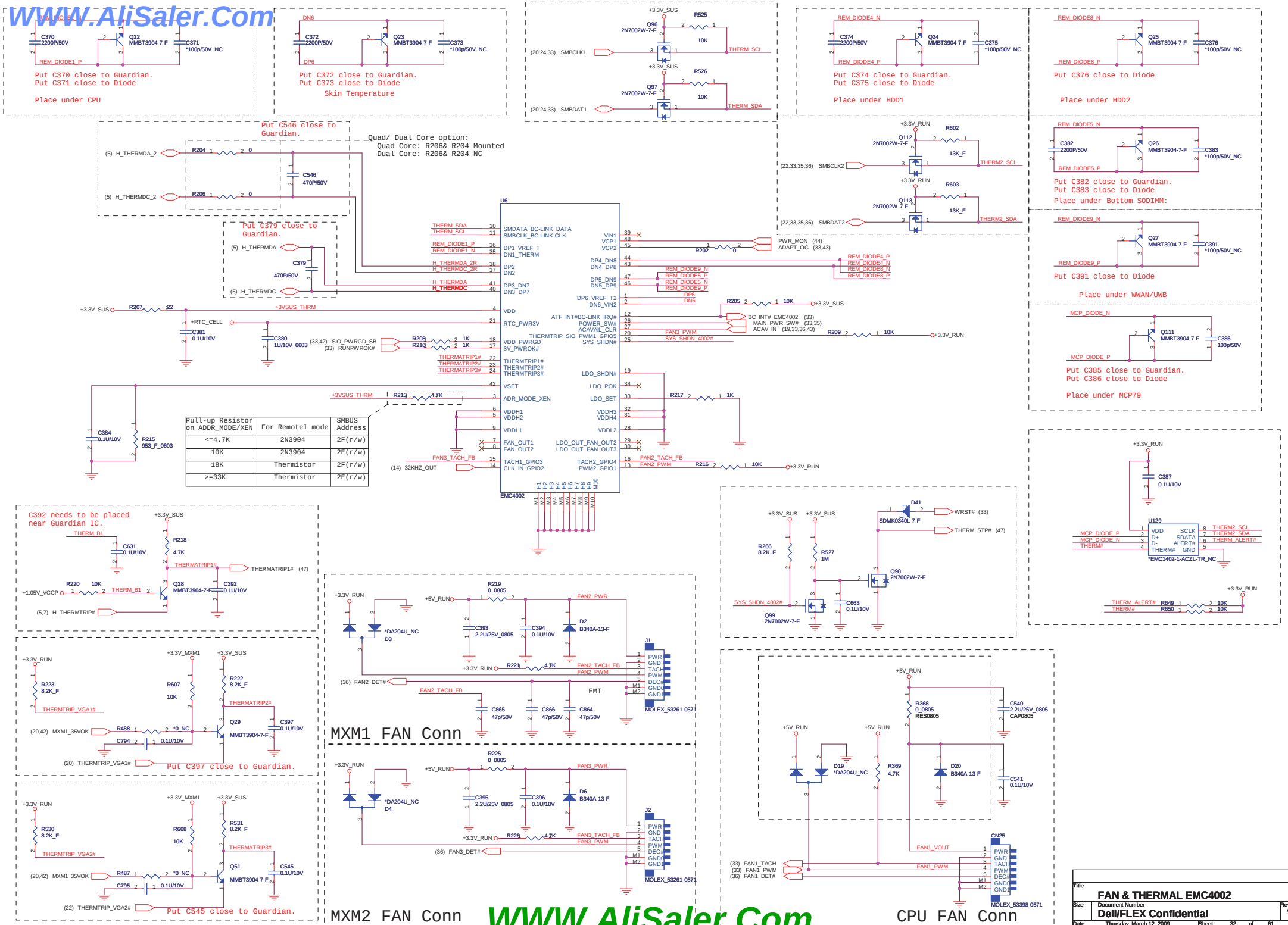

Pull-up Resistor on ADDR_MODE/XEN	For Remotel mode	SMBUS Address
<=4.7K	2N3904	2F(r/w)
10K	2N3904	2E(r/w)
18K	Thermistor	2F(r/w)
>=33K	Thermistor	2E(r/w)

Title: FAN & THERMAL EMC4002

Size | Document Number: Dell/FLEX Confidential | Rev A00

Date: Thursday, March 12, 2009 | Sheet 32 of 61

WWW.AliSaler.Com

WWW.AliSaler.Com

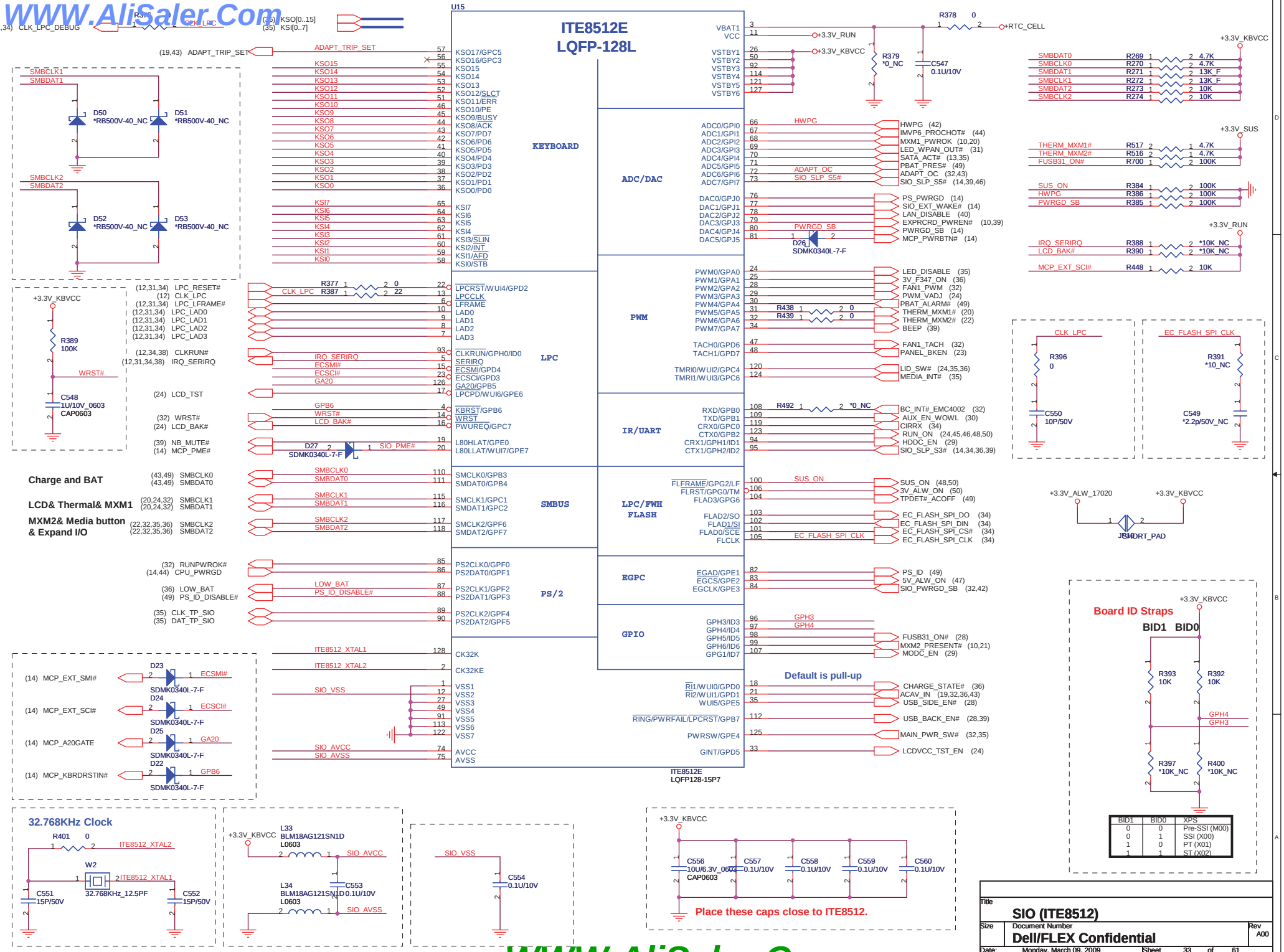

BID1	BID0	XPS
0	0	Pre-SSI (M00)
0	1	SSI (X00)
1	0	PT (X01)
1	1	ST (X02)

Title: SIO (ITE8512)

Size: | Document Number: Dell/FLEX Confidential | Rev: A00

Date: Monday, March 09, 2009 | Sheet 33 of 61

WWW.AliSaler.Com

WWW.AliSaler.Com

16Mbit (2M Byte), SPI

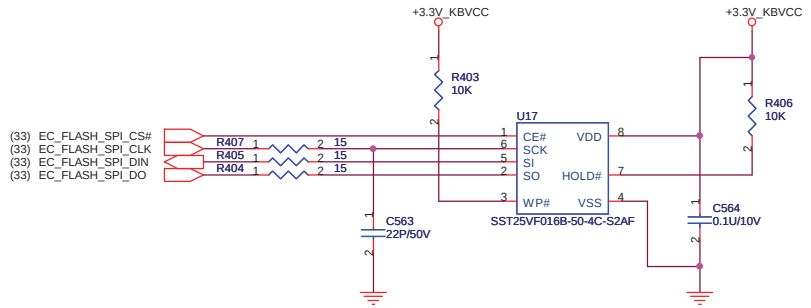

RTC BATTERY

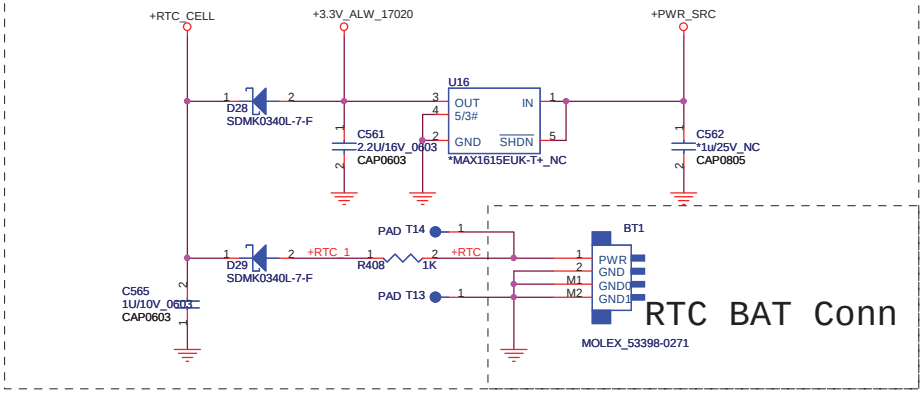

to Consumer IR

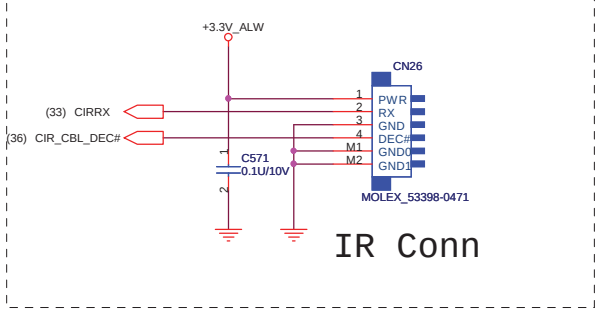

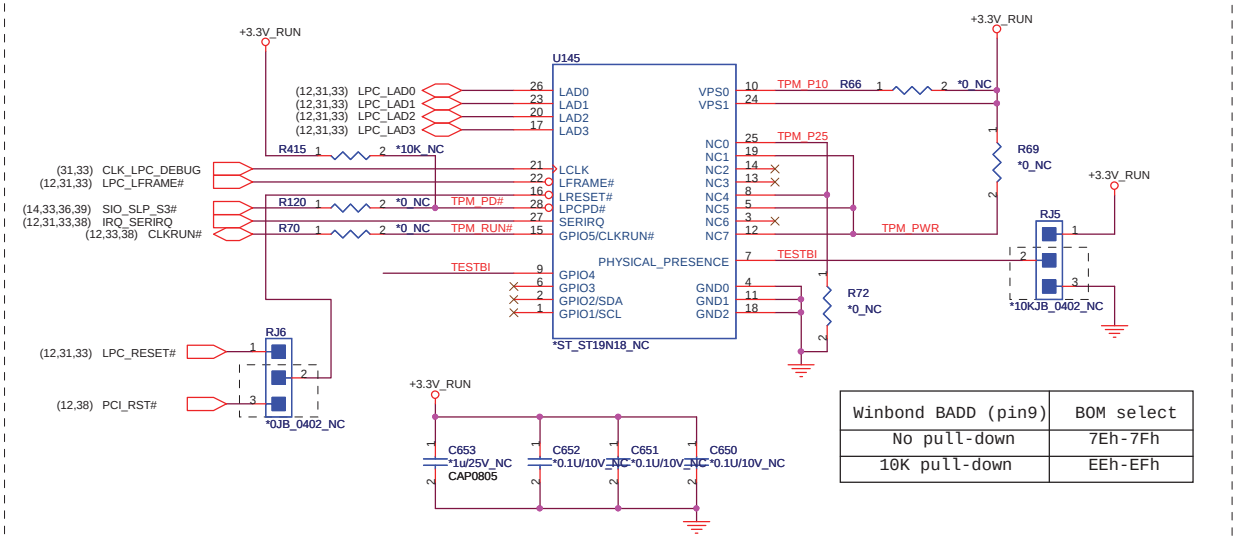

Winbond BADD (pin9)	BOM select
No pull-down	7Eh-7Fh
10K pull-down	EEh-EFh

TPM Vendor	BOM select
ST	Mounted: R66 NA: R69, R70, R72, C647, C648
Winbond	NA: R66 Mounted: R69, R70, R72, C647, C648

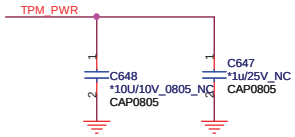

Title	FLASH/ RTC/ CIR
Size	
Document Number	Dell/FLEX Confidential
Rev	A00
Date:	Monday, March 09, 2009
Sheet	34 of 61

WWW.AliSaler.Com

WWW.AliSaler.Com

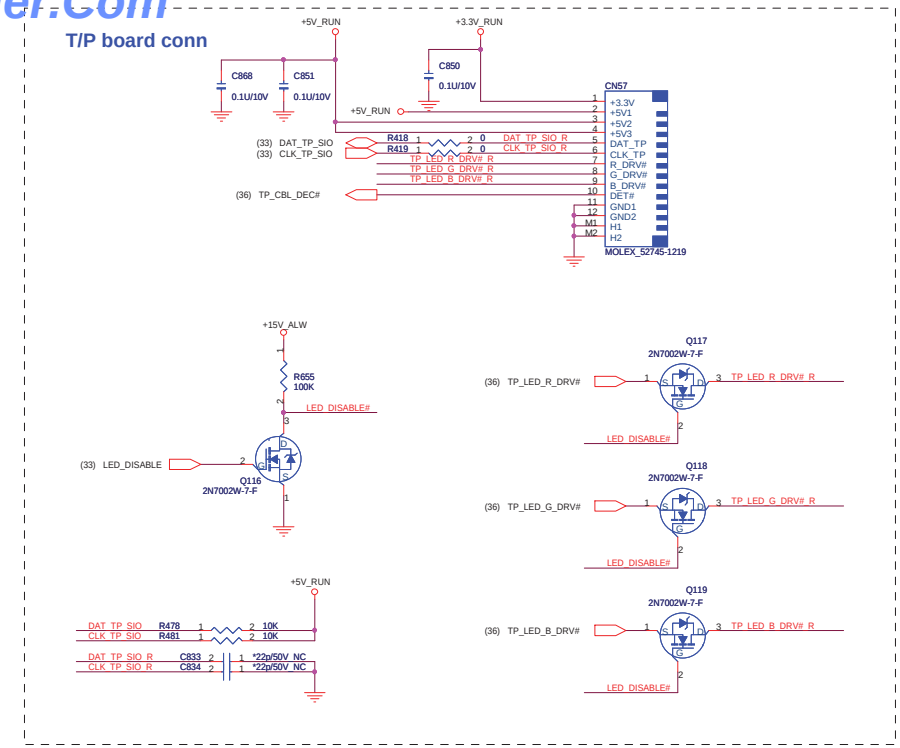

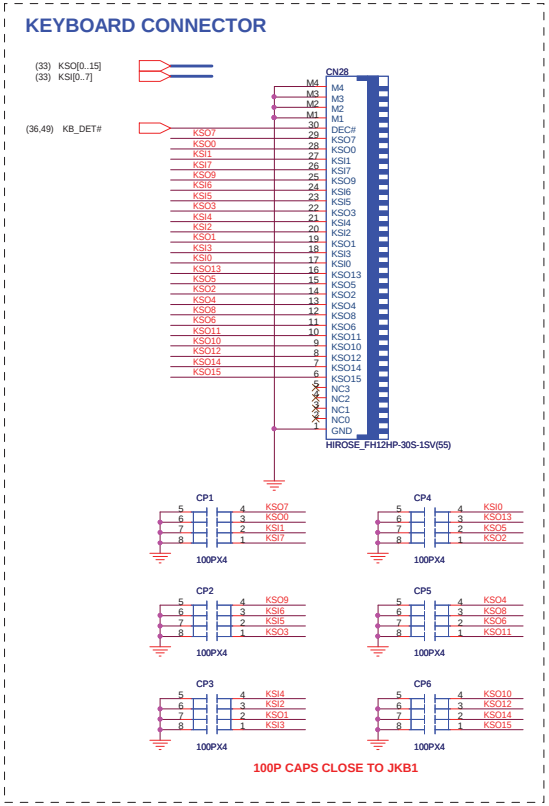

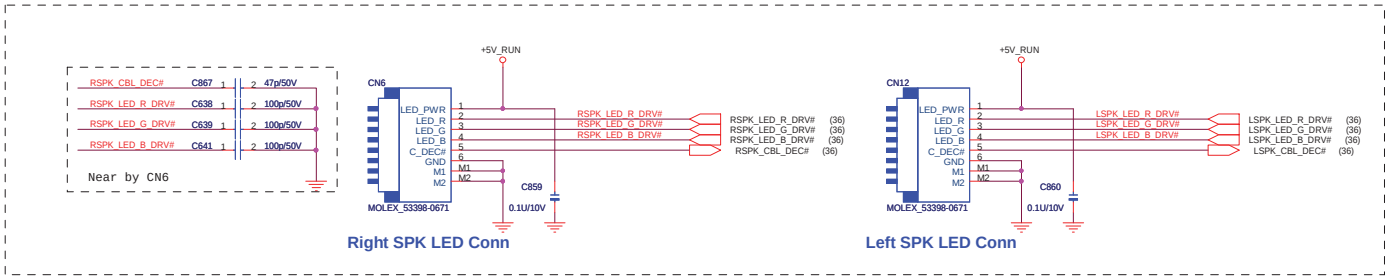

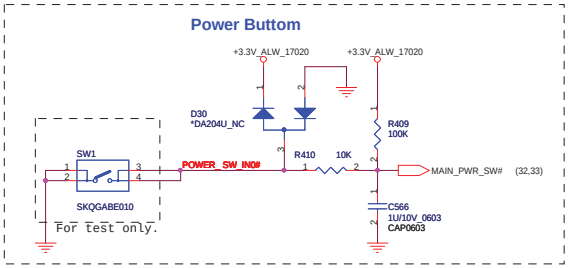

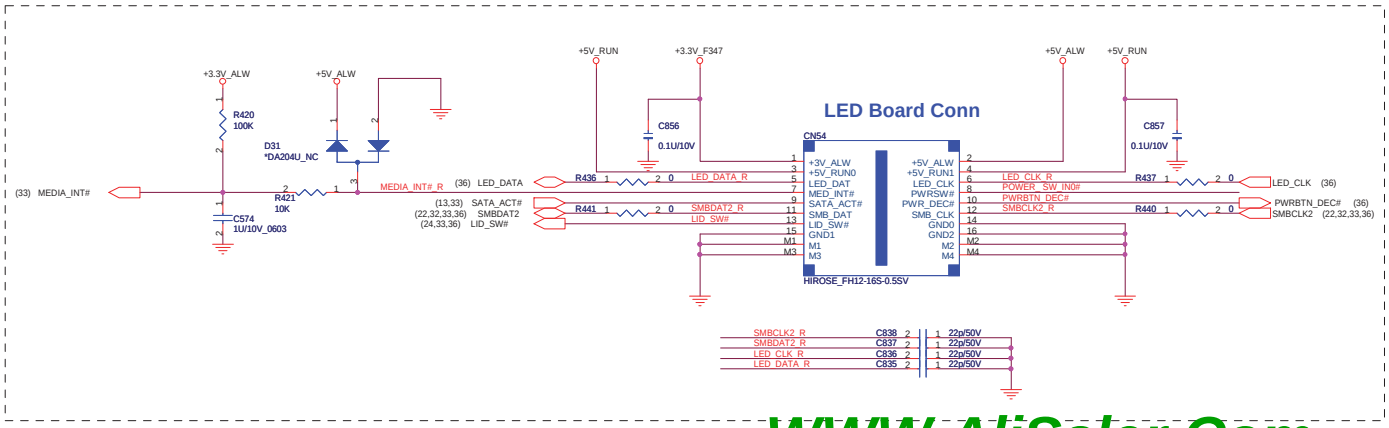

Title	KB/ DAUGHTER BOARD CONN	
Size	Document Number: Dell/FLEX Confidential	Rev A00
Date: Monday, March 09, 2009	Sheet 35 of 61	

WWW.AliSaler.Com

WWW.AliSaler.Com

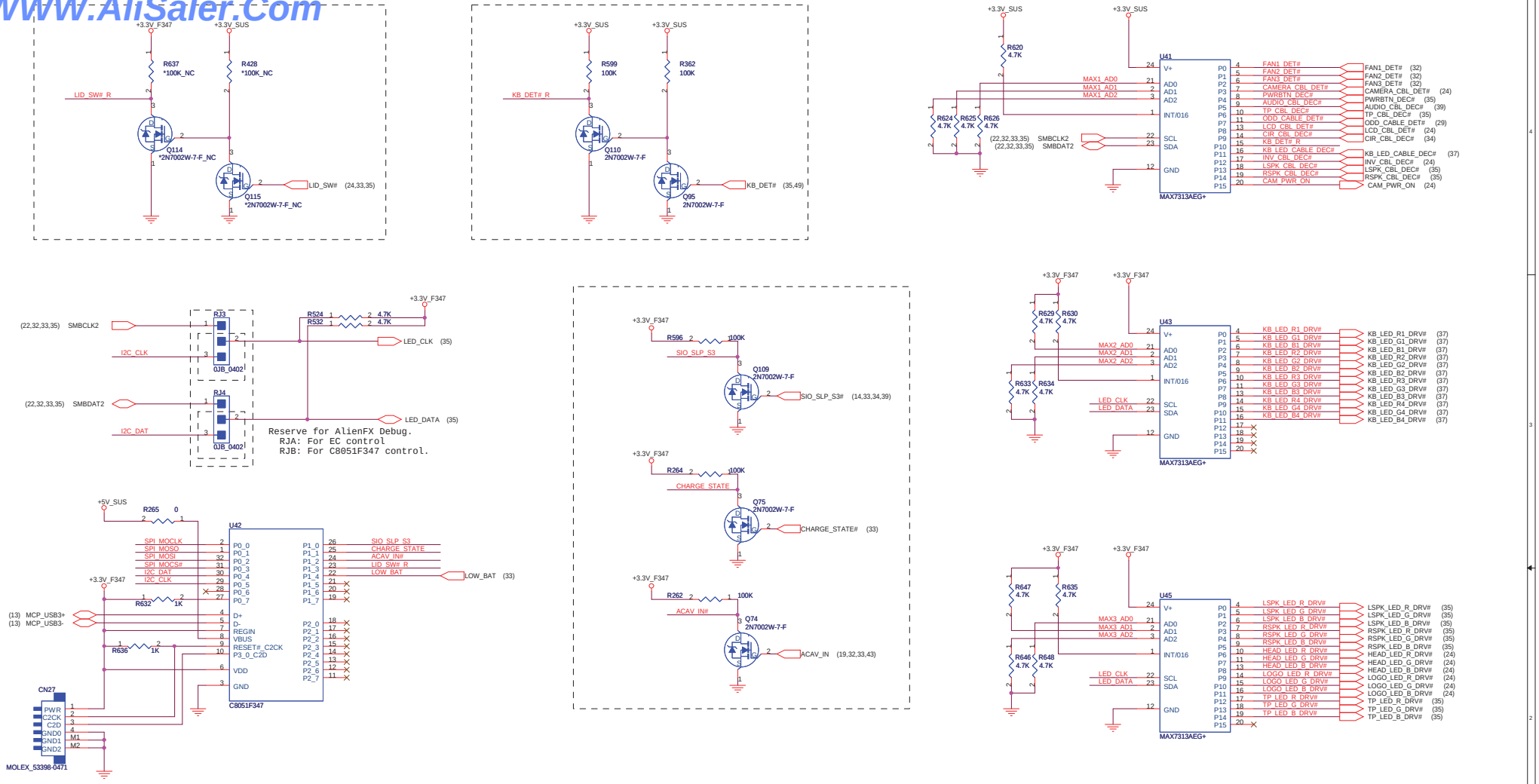

WWW.AliSaler.Com

WWW.AliSaler.Com

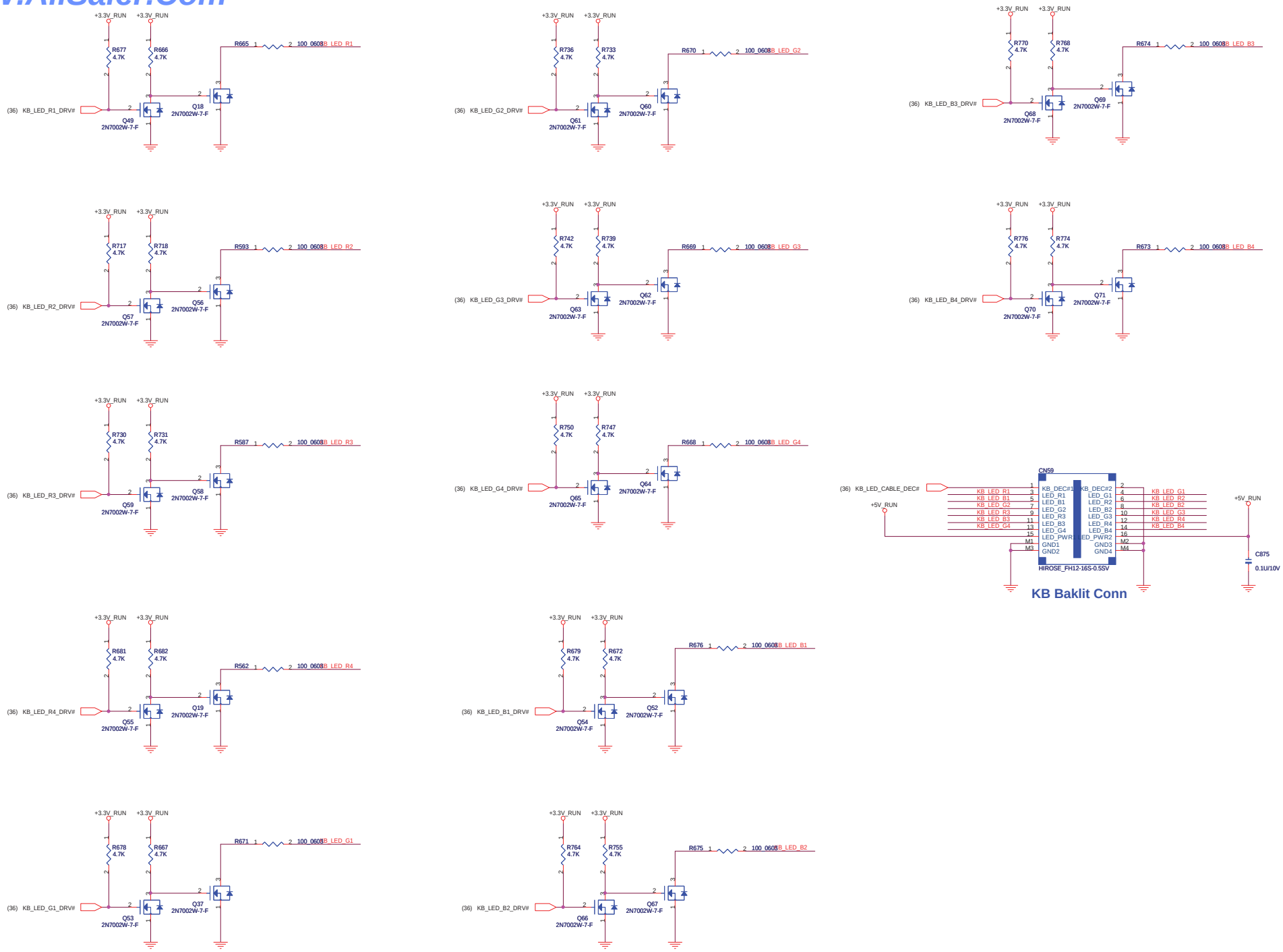

Title	LIGHT FX-2/ LID	
Size	Document Number: Dell/FLEX Confidential	Rev A00
Date: Monday, March 09, 2009	Sheet 37 of 61	

WWW.AliSaler.Com

WWW.AliSaler.Com

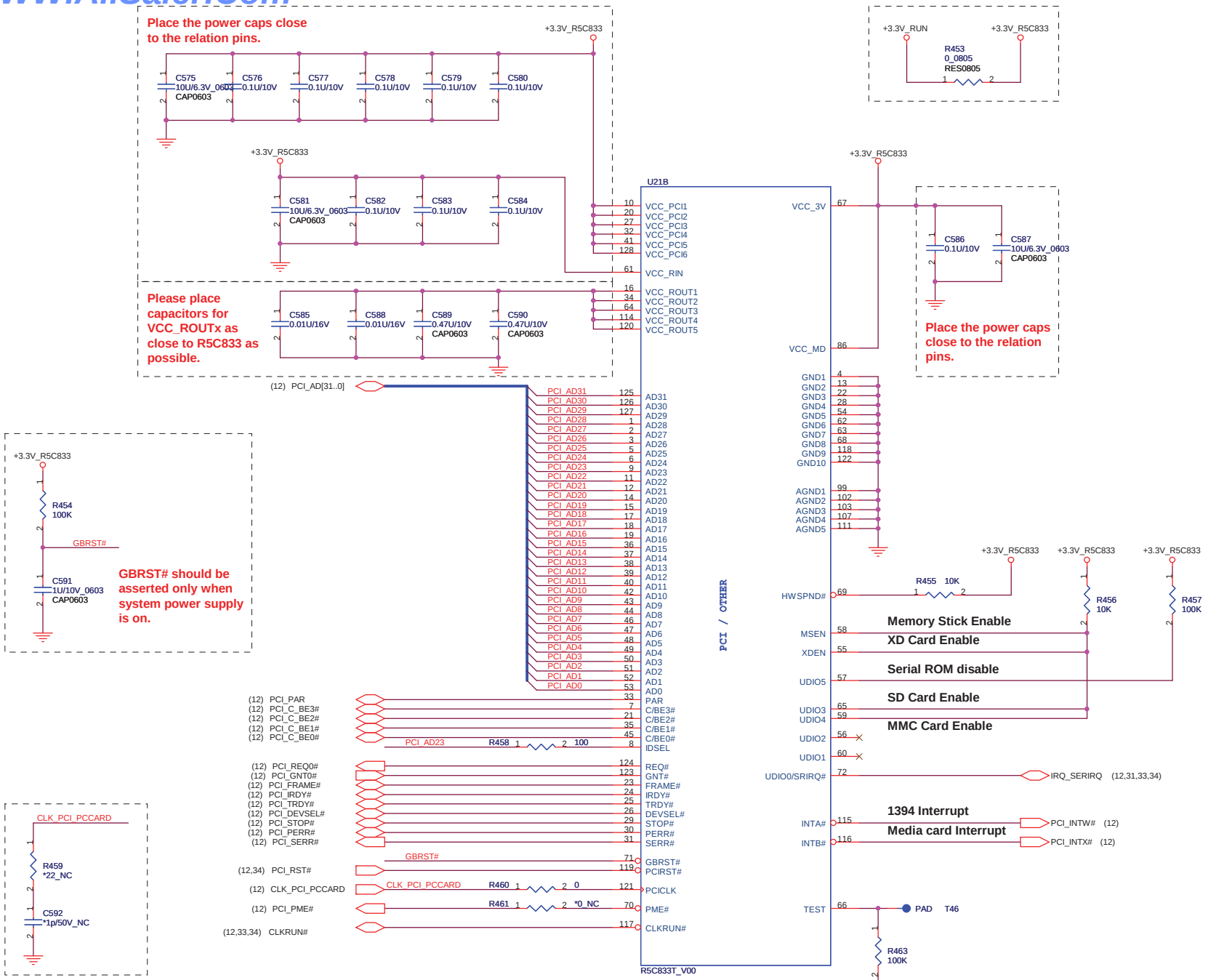

Title	CardReader (5C833)	
Size	Document Number: Dell/FLEX Confidential	Rev A00
Date: Thursday, March 12, 2009	Sheet 38 of 61	

WWW.AliSaler.Com

WWW.AliSaler.Com

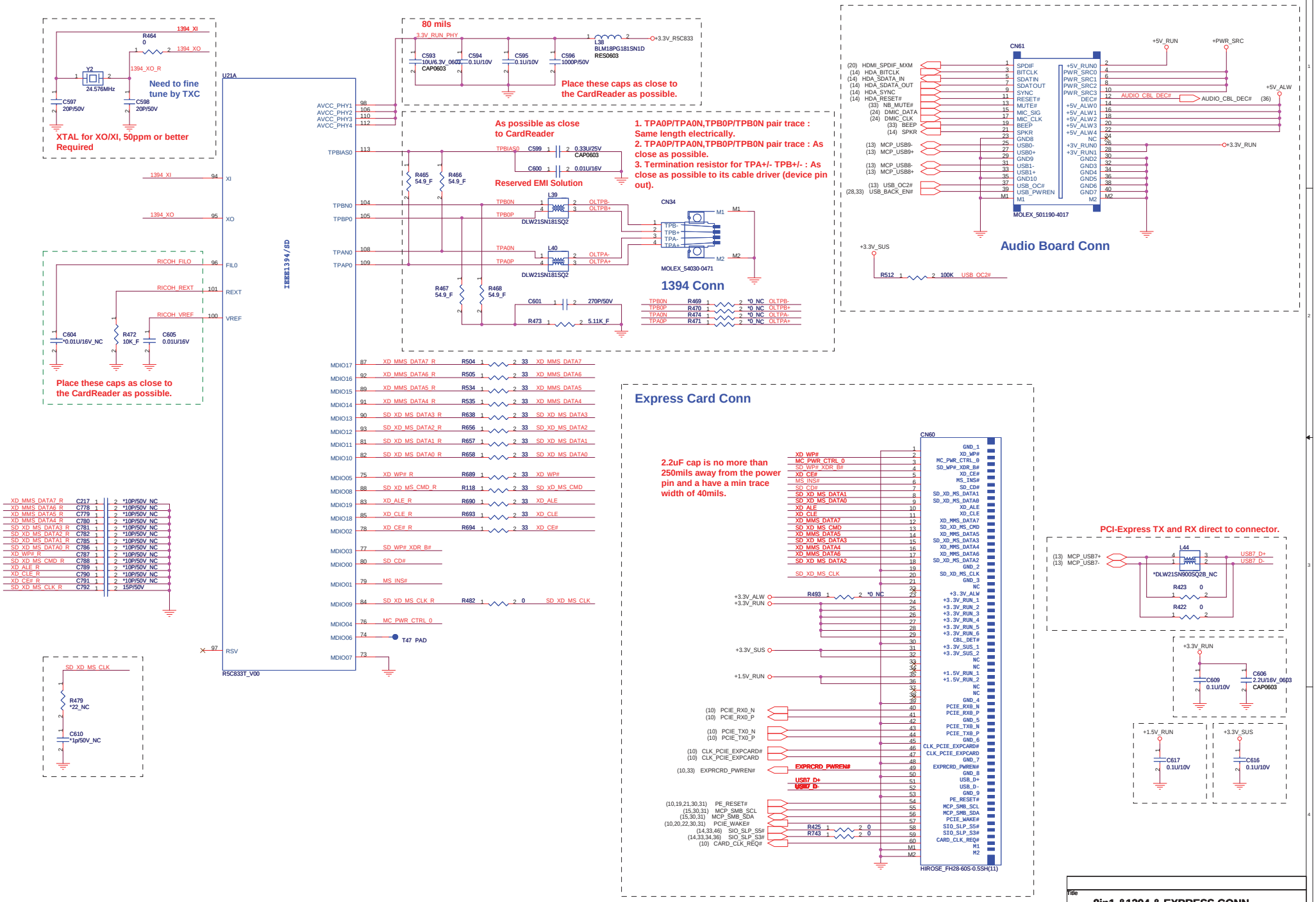

Title	8in1 &1394 & EXPRESS CONN	
Size	Document Number: Dell/FLEX Confidential	Rev A00
Date: Monday, March 09, 2009	Sheet 39 of 61	

WWW.AliSaler.Com

WWW.AliSaler.Com

Layout Note:
1.Use 50 ohm impedance for all trace.
2. Trace length matched to a tolerance of 9.8mm in order to keep the skew between signals less than 0.07ns.
3.The receive and transmit signals kept away from each other and other analog and clock signals to reduce crosstalk.

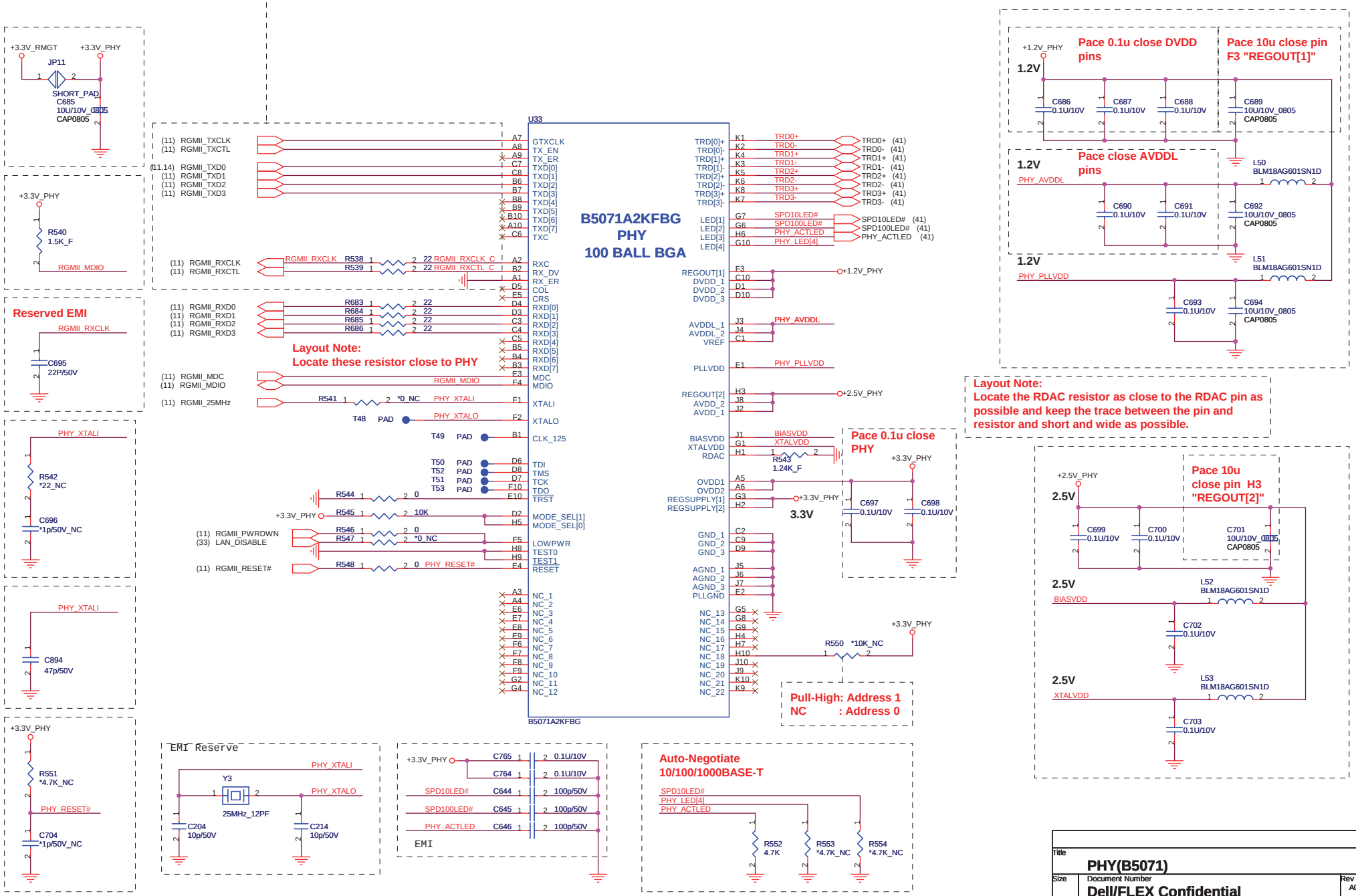

Title	PHY(B5071)	
Size	Document Number: Dell/FLEX Confidential	Rev A00
Date: Thursday, March 12, 2009	Sheet 40 of 61	

WWW.AliSaler.Com

WWW.AliSaler.Com

TRANSFORMER

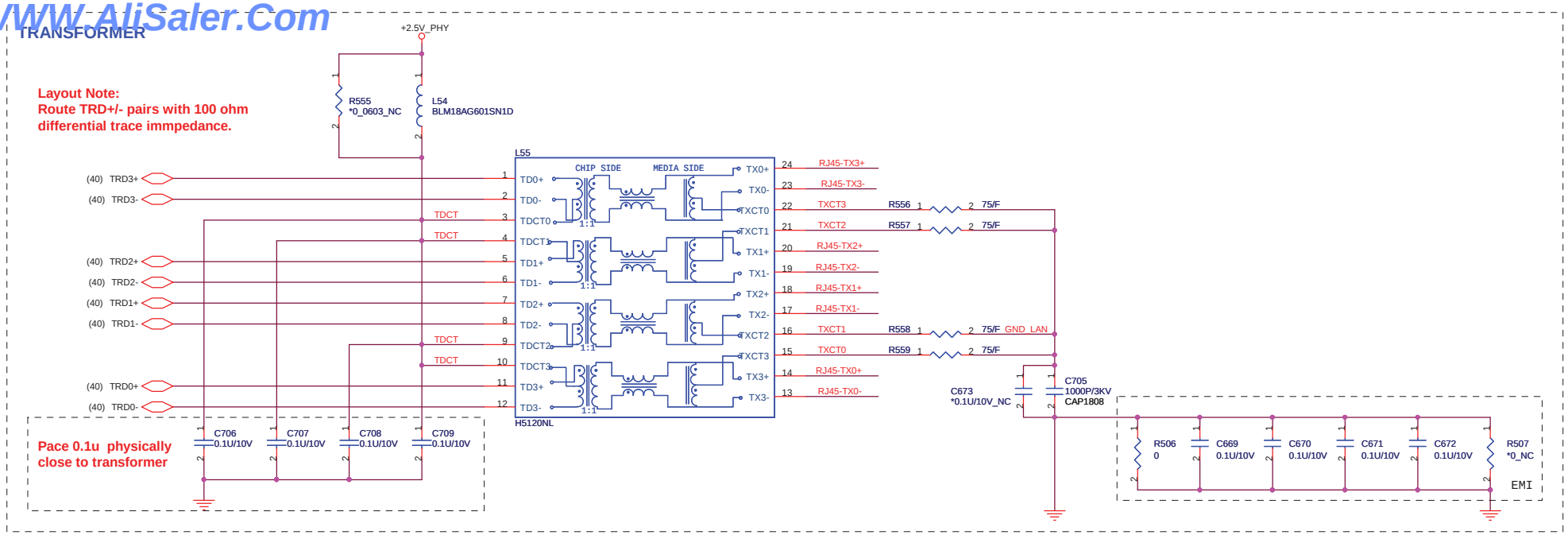

RJ-45 Connector

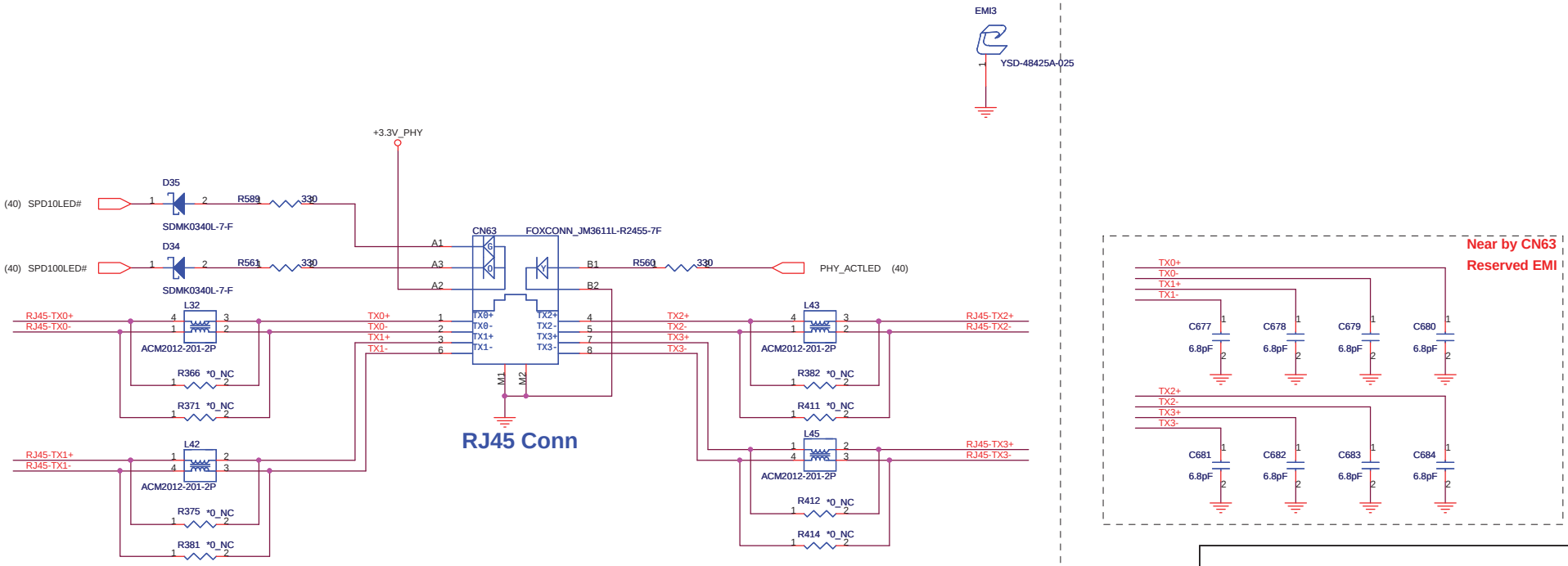

Title	RJ-45/TRANSFORM	
Size	Document Number: Dell/FLEX Confidential	Rev A00
Date: Thursday, March 12, 2009	Sheet 41 of 61	

WWW.AliSaler.Com

WWW.AliSaler.Com

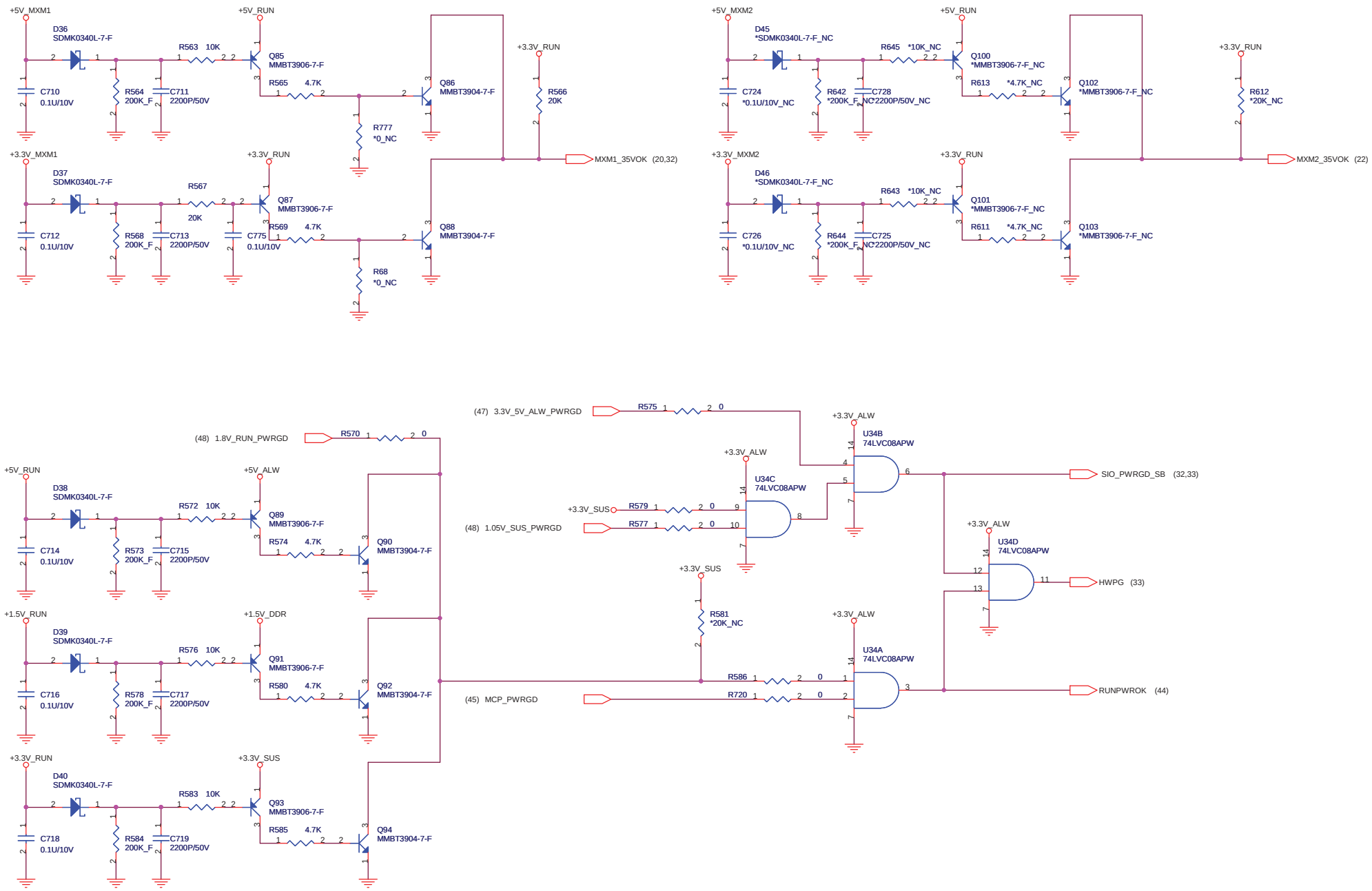

Title	System Reset Circuit	
Size	Document Number: Dell/FLEX Confidential	Rev A00
Date: Thursday, March 12, 2009	Sheet 42 of 61	

WWW.AliSaler.Com

WWW.AliSaler.Com

Note:
Component Values on Schematic are for MAX8731 only,
Please see table 1-3 for BQ24745 or ISL88731
component Values.

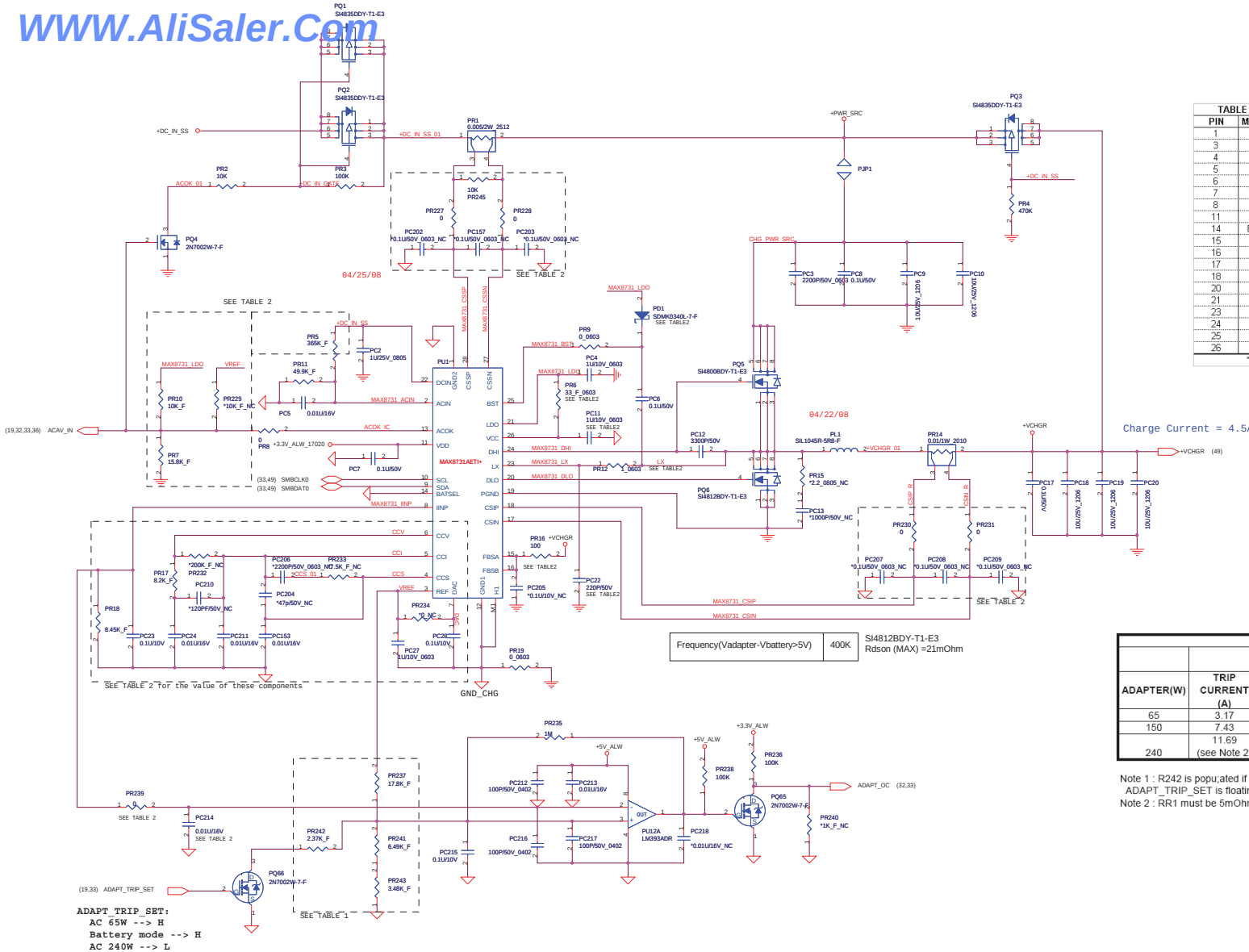

Frequency(Vadapter-Vbattery>5V)	400K

SI4812BDY-T1-E3
Rdson (MAX) =21mOhm

TABLE 3 , PIN NAME DIFFERENCES

PIN	MAX8731A	ISL88731	bq24745
1	GND	NC	ICREF
3	REF	VREF	VREF
4	CCS	ICOMP	EAO
5	CCI	NC	EAI
6	CCV	VCOMP	FBO
7	DAC	NC	CE
8	IINP	ICM	VICM
11	VDD	VDDSMB	VDDSMB
14	BATSEL	NC	NC
15	FBSA	VFB	VFB
16	FBSB	NC	NC
17	CSIN	CSON	CSON
18	CSIP	CSOP	CSOP
20	DLO	LAGTE	LAGTE
21	LDO	VDDP	VDDP
23	LX	PHASE	PHASE
24	DHI	UGATE	UGATE
25	BST	BOOT	BOOT
26	VCC	VCC	ICOUT

"NC" means no-connect

TABLE 2
BOM DIFFERENCES

REF DES	MAXIM	INTERSIL	TI
PR245	NO STUFF	10K , 0402 , 5%	NO STUFF
PR227	0 , 0402 , 5%	10 , 0402 , 5%	0 , 0402 , 5%
PR228	0 , 0402 , 5%	10 , 0402 , 5%	0 , 0402 , 5%
PC157	NO STUFF	0.1uF	0.1uF
PC202	NO STUFF	NO STUFF	0.1uF
PC203	NO STUFF	NO STUFF	NO STUFF
PR230	0 , 0402 , 5%	10 , 0402 , 5%	0 , 0402 , 5%
PR231	0 , 0402 , 5%	10 , 0402 , 5%	0 , 0402 , 5%
PC207	NO STUFF	NO STUFF	0.1uF
PC208	NO STUFF	0.1uF	0.1uF
PC209	NO STUFF	NO STUFF	NO STUFF
PR17	8.2K , 0402 , 5%	2.2K , 0402 , 5%	4.7K , 0402 , 5%
PR18	8.45K , 0402 , 1%	NO STUFF	NO STUFF
PR232	NO STUFF	NO STUFF	200K , 0402 , 5%
PR233	NO STUFF	NO STUFF	7.5K , 0402 , 5%
PR234	NO STUFF	NO STUFF	0 , 0402 , 5%
PC23	0.1uF , 0402 , 10V	NO STUFF	200pF , 0402 , 10V
PC24	0.01uF	0.01uF	NO STUFF
PC210	NO STUFF	NO STUFF	130pF , 0402 , 10V
PC211	0.01uF	NO STUFF	NO STUFF
PC153	0.01uF	0.01uF	NO STUFF
PC204	NO STUFF	NO STUFF	51pF , 0402 , 10V
PC206	NO STUFF	NO STUFF	2000pF , 0402 , 10V
PC27	1.0uF , 0603 , 10V	NO STUFF	1.0uF , 0603 , 10V
PC28	0.1uF , 0402 , 10V	NO STUFF	NO STUFF
PR10	10K , 0402 , 1%	10K , 0402 , 1%	NO STUFF
PR7	15.8K , 0402 , 1%	15.8K , 0402 , 1%	NO STUFF
PR229	NO STUFF	NO STUFF	10K , 0402 , 5%
PR5	365K , 0402 , 1%	215K , 0402 , 1%	309K , 0402 , 1%
PD1	CH501H-40PT	NO STUFF	CH501H-40PT
PR6	33 , 0603 , 1%	33 , 0603 , 1%	NO STUFF
PC11	1.0uF , 0603 , 10V	1.0uF , 0603 , 10V	NO STUFF
PR12	1 , 0603 , 1%	0 , 0603 , 5%	0 , 0603 , 5%
PR16	100 , 0402 , 5%	100 , 0402 , 5%	0 , 0402 , 5%
PC22	220pF , 0402 , 50V	NO STUFF	NO STUFF
PR239	0 , 0402 , 5%	8.45K , 0402 , 1%	8.45K , 0402 , 1%
PC214	0.01uF	0.1uF	0.1uF
PC12	3.3nF	NO STUFF	NO STUFF

TABLE 1

			MAX8731A/ISL88731			bq24745		
ADAPTER(W)	TRIP CURRENT (A)	R237	R241	R243	R242 (see Note 1)	R241	R243	R242 (see Note 1)
65	3.17	57.6K	13K	105	24.9K	12.4K	205	24.3K
150	7.43	30.9K	24.9K	499	10.7K	23.7K	499	10.5K
240	11.69 (see Note 2)	17.8K	6.49K	3.48K	2.37K	8.45K	1.18K	23.2K

Note 1 : R242 is popu;ated if ADAPT_TRIP_SET is used to program for the next lower adapter
ADAPT_TRIP_SET is floating for the higher adapter , grounded for the lower adapter
Note 2 : RR1 must be 5mOhms instead of 10mOhms for the 240W adapter

Title: Charger (MAX8731)
Size: Document Number: Dell/FLEX Confidential
Rev: A00
Date: Monday, March 09, 2009 Sheet 43 of 61

WWW.AliSaler.Com

WWW.AliSaler.Com

NOTE
Component Value for Schematic Purposes (MAX8786 only)

IMVP-6 solution for Penryn:
TDC: 55A
OCP: 76A

4/11 Andy: note modify

0715 Power

GND_VHCORE

BSC030N03MS
Rdson (MAX) =3.8mOhm

Title	CPU_CORE (MAX8786)
Size	
Document Number	Dell/FLEX Confidential
Rev	A00
Date:	Monday, March 09, 2009
Sheet	44 of 61

WWW.AliSaler.Com

WWW.AliSaler.Com

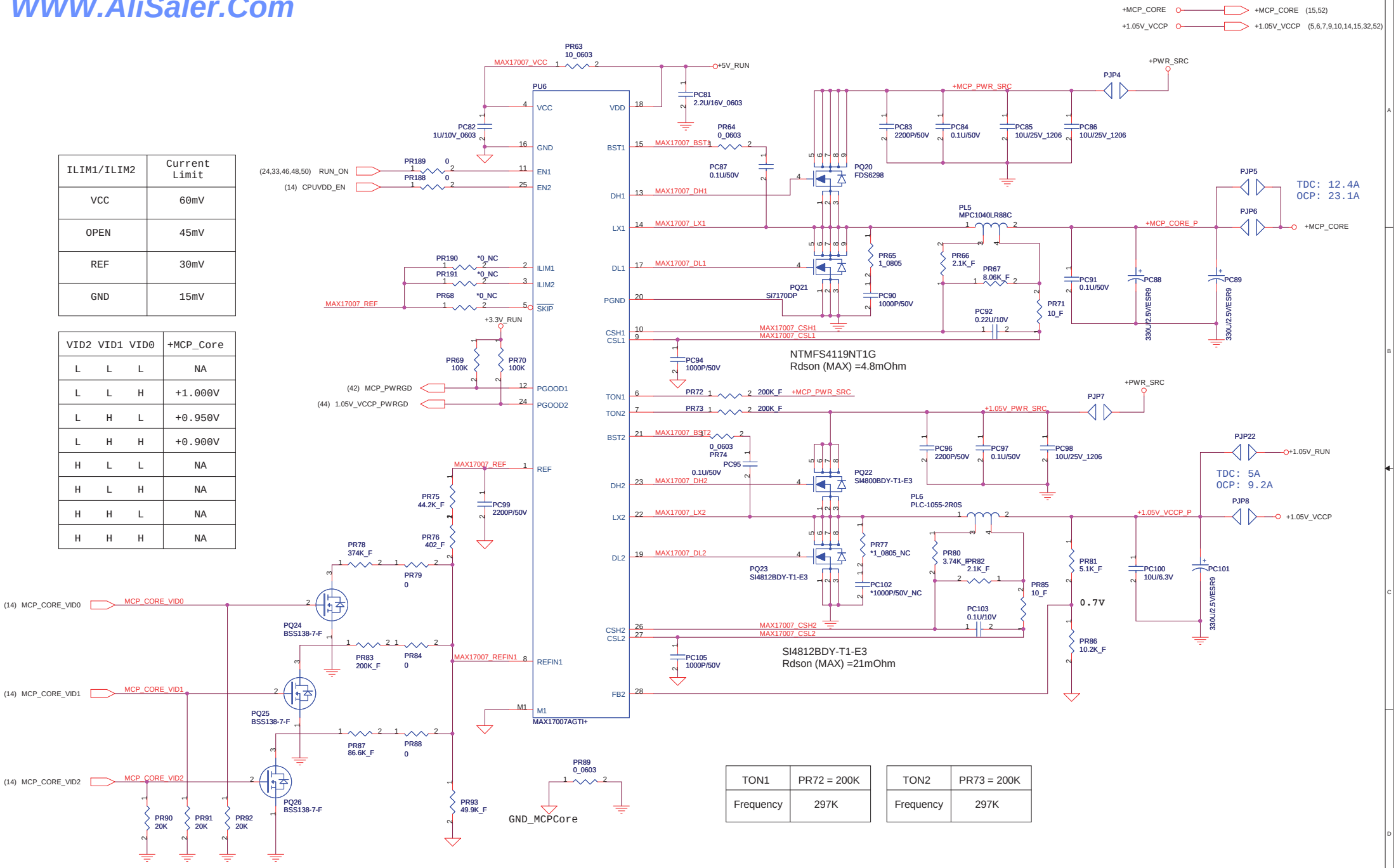

ILIM1/ILIM2	Current Limit
VCC	60mV
OPEN	45mV
REF	30mV
GND	15mV

VID2	VID1	VID0	+MCP_Core
L	L	L	NA
L	L	H	+1.000V
L	H	L	+0.950V
L	H	H	+0.900V
H	L	L	NA
H	L	H	NA
H	H	L	NA
H	H	H	NA

TON1	PR72 = 200K
Frequency	297K

TON2	PR73 = 200K
Frequency	297K

Title: MCP/1.05VCC (MAX17007)
Size: Document Number: Dell/FLEX Confidential
Rev: A00
Date: Thursday, March 12, 2009
Sheet 45 of 61

WWW.AliSaler.Com

WWW.AliSaler.Com

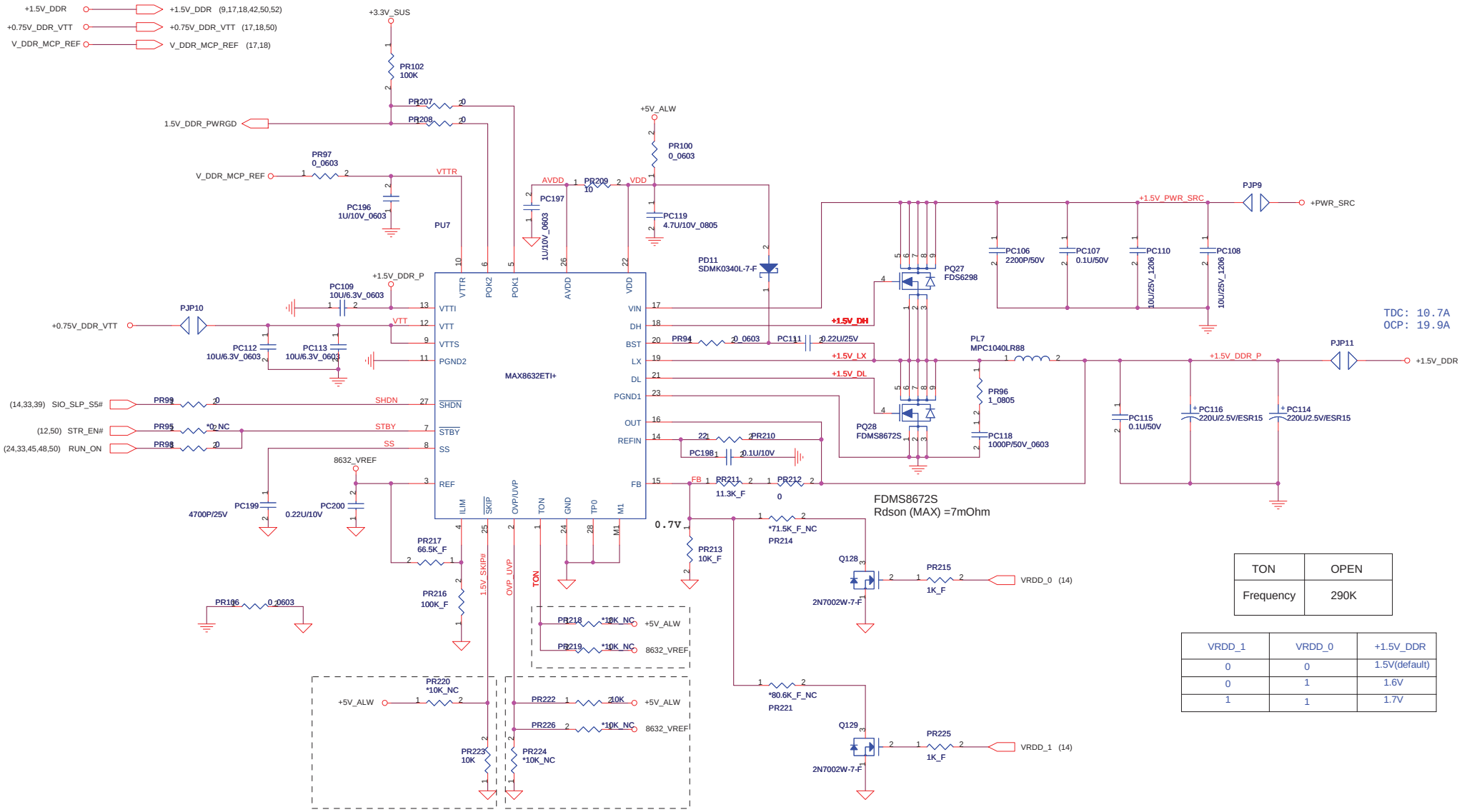

TON	OPEN
Frequency	290K

VRDD_1	VRDD_0	+1.5V_DDR
0	0	1.5V(default)
0	1	1.6V
1	1	1.7V

Title: DDR1.5/0.75(TPS51116)

Size | Document Number: Dell/FLEX Confidential | Rev: A00

Date: Monday, March 09, 2009 | Sheet 46 of 61

WWW.AliSaler.Com

WWW.AliSaler.Com

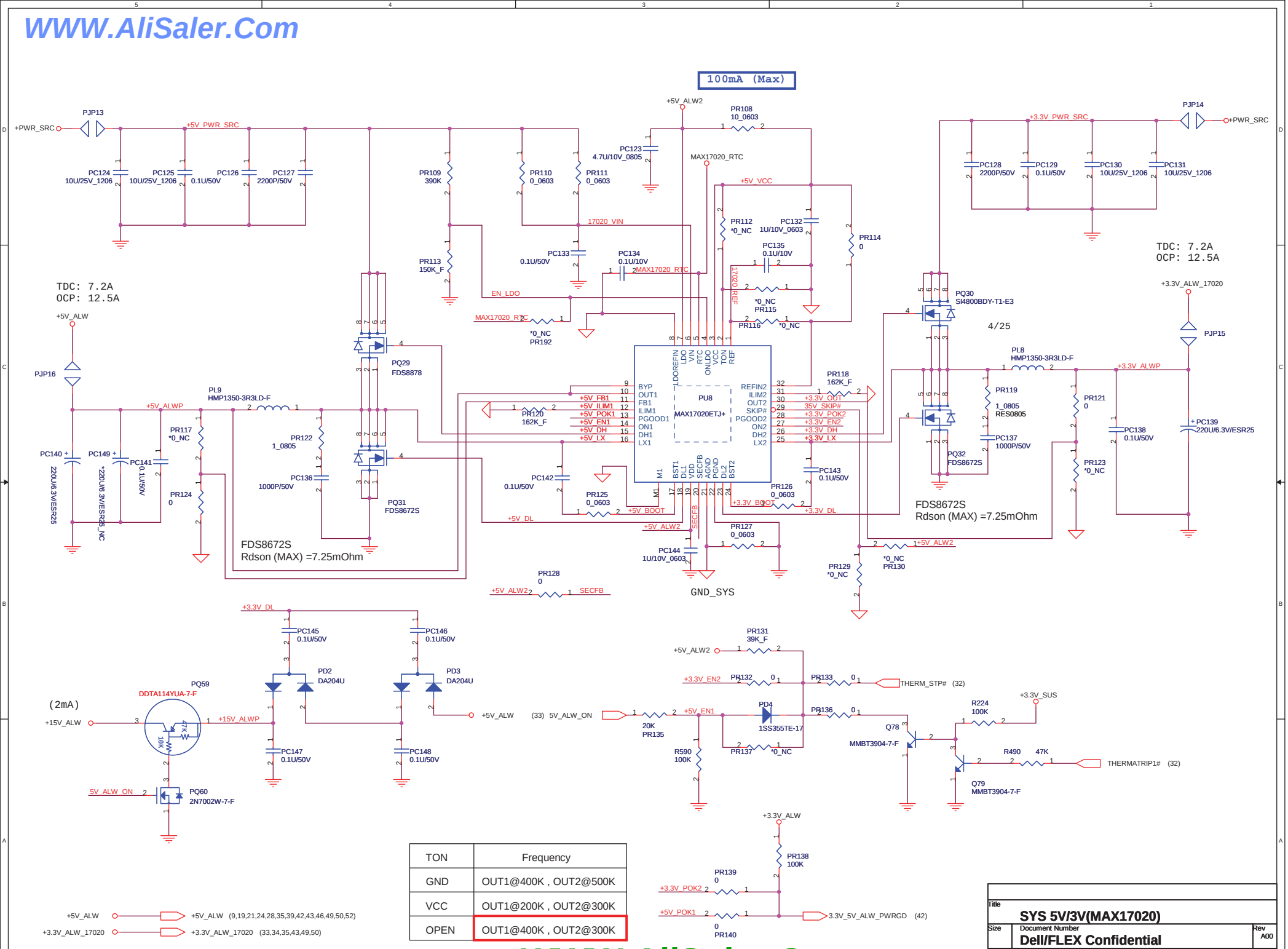

TON	Frequency
GND	OUT1@400K , OUT2@500K
VCC	OUT1@200K , OUT2@300K
OPEN	OUT1@400K , OUT2@300K

Title: SYS 5V/3V(MAX17020)

Size | Document Number: Dell/FLEX Confidential | Rev A00

Date: Thursday, March 12, 2009 | Sheet 47 of 61

WWW.AliSaler.Com

WWW.AliSaler.Com

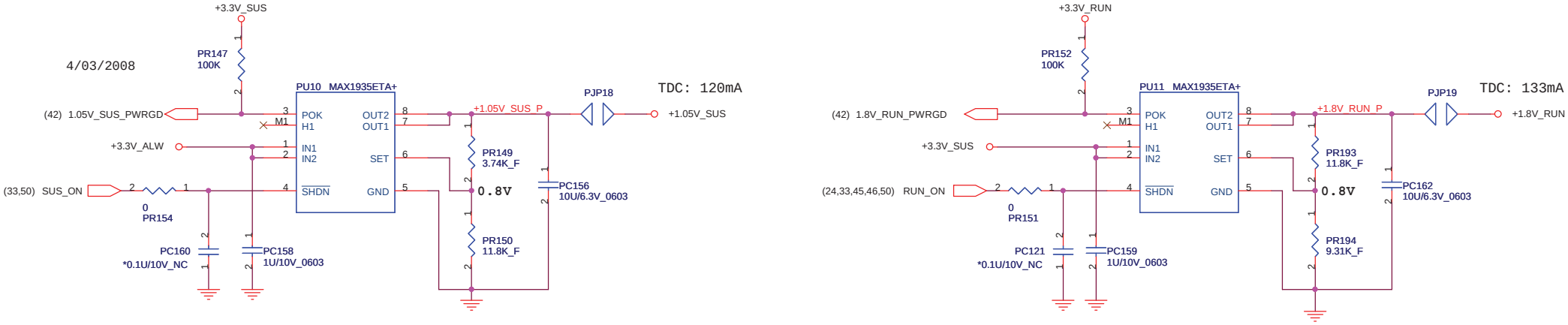

Title	1.1V_SUS/1.8V_RUN
Size	Document Number: Dell Confidential
Rev	A00
Date: Monday, March 09, 2009	Sheet 48 of 61

WWW.AliSaler.Com

WWW.AliSaler.Com

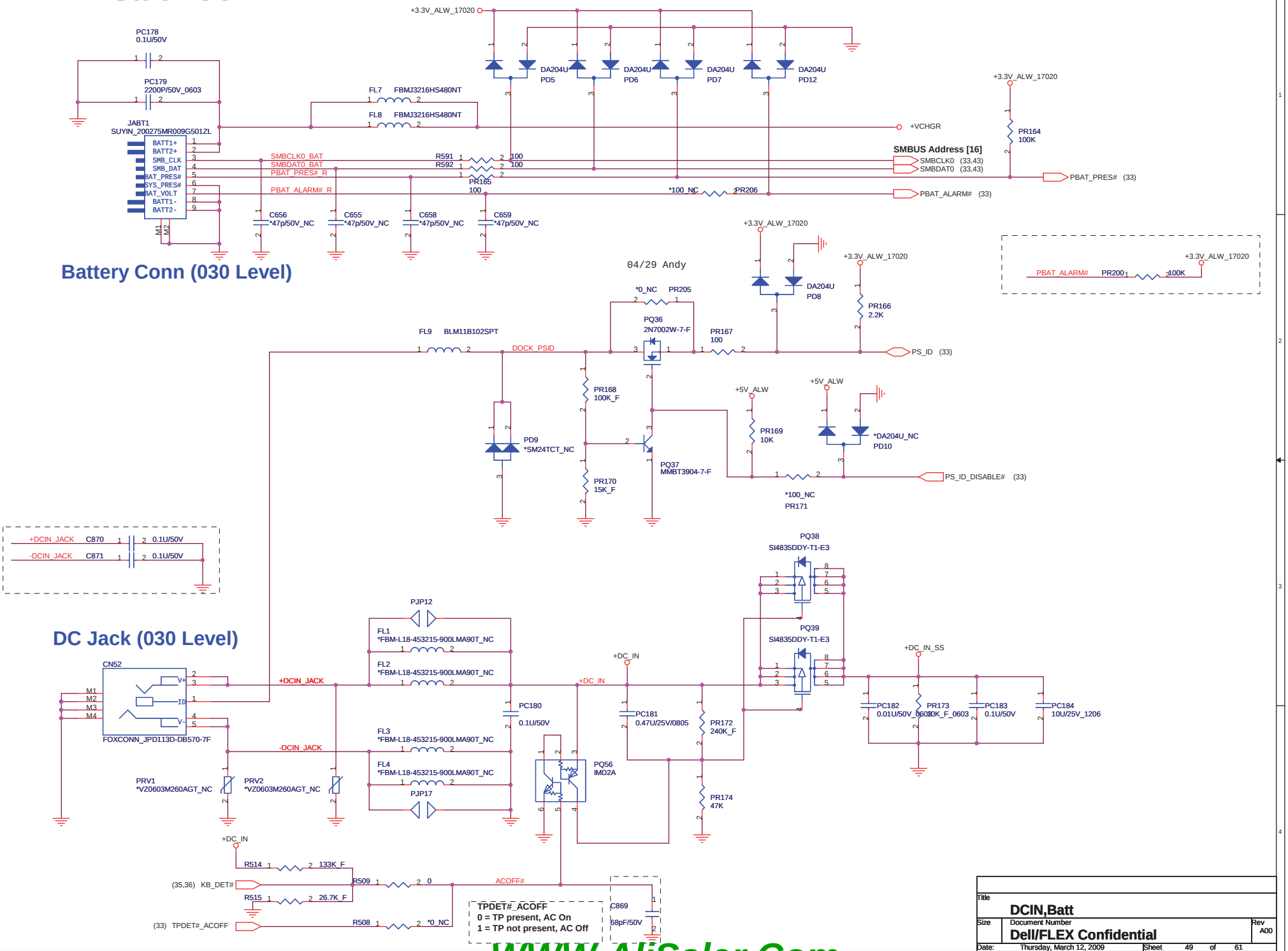

WWW.AliSaler.Com

WWW.AliSaler.Com

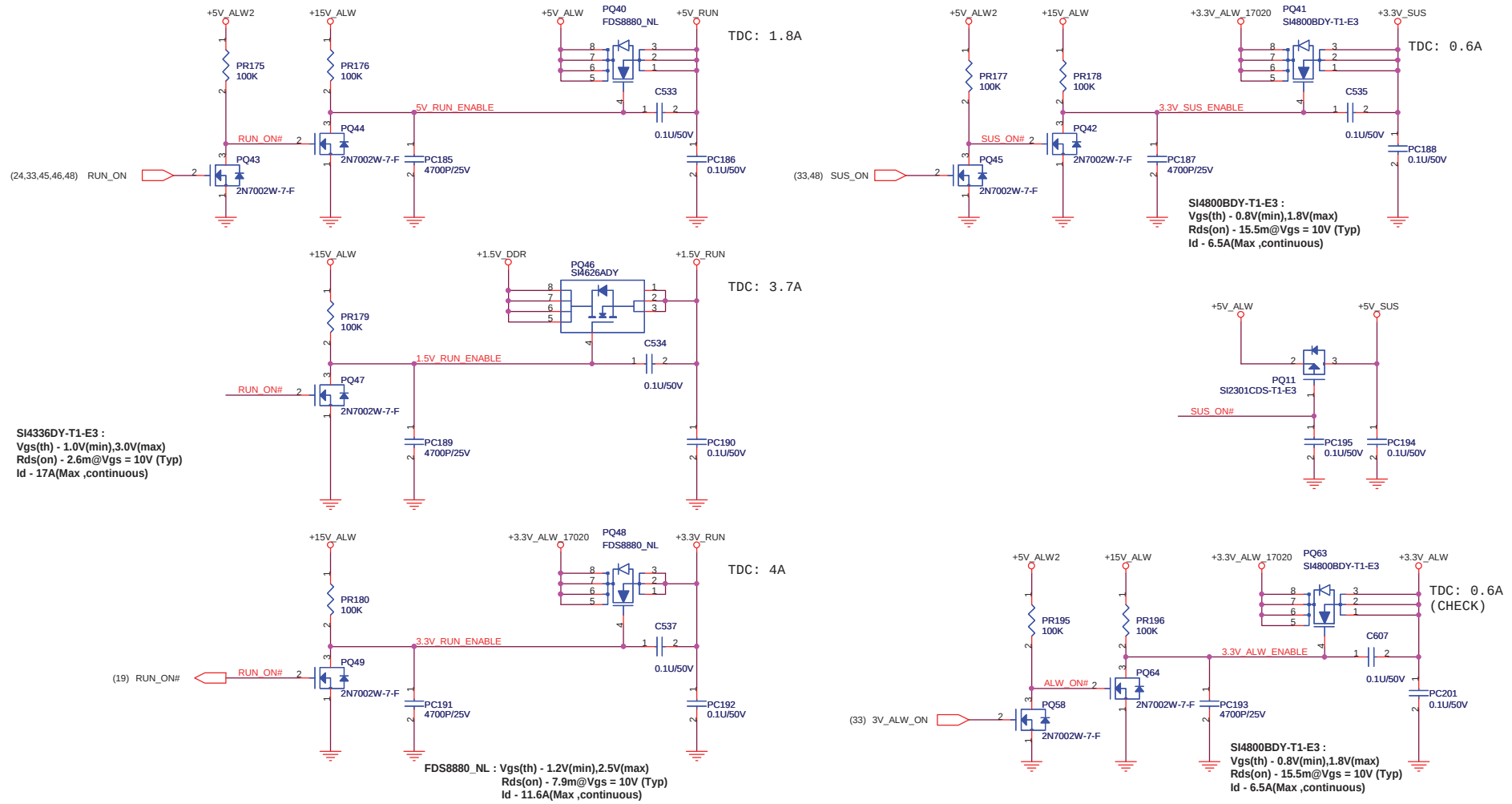

Title	RUN POWER SW	
Size	Document Number: Dell/FLEX Confidential	Rev A00
Date: Monday, March 09, 2009	Sheet 50 of 61	

WWW.AliSaler.Com

WWW.AliSaler.Com

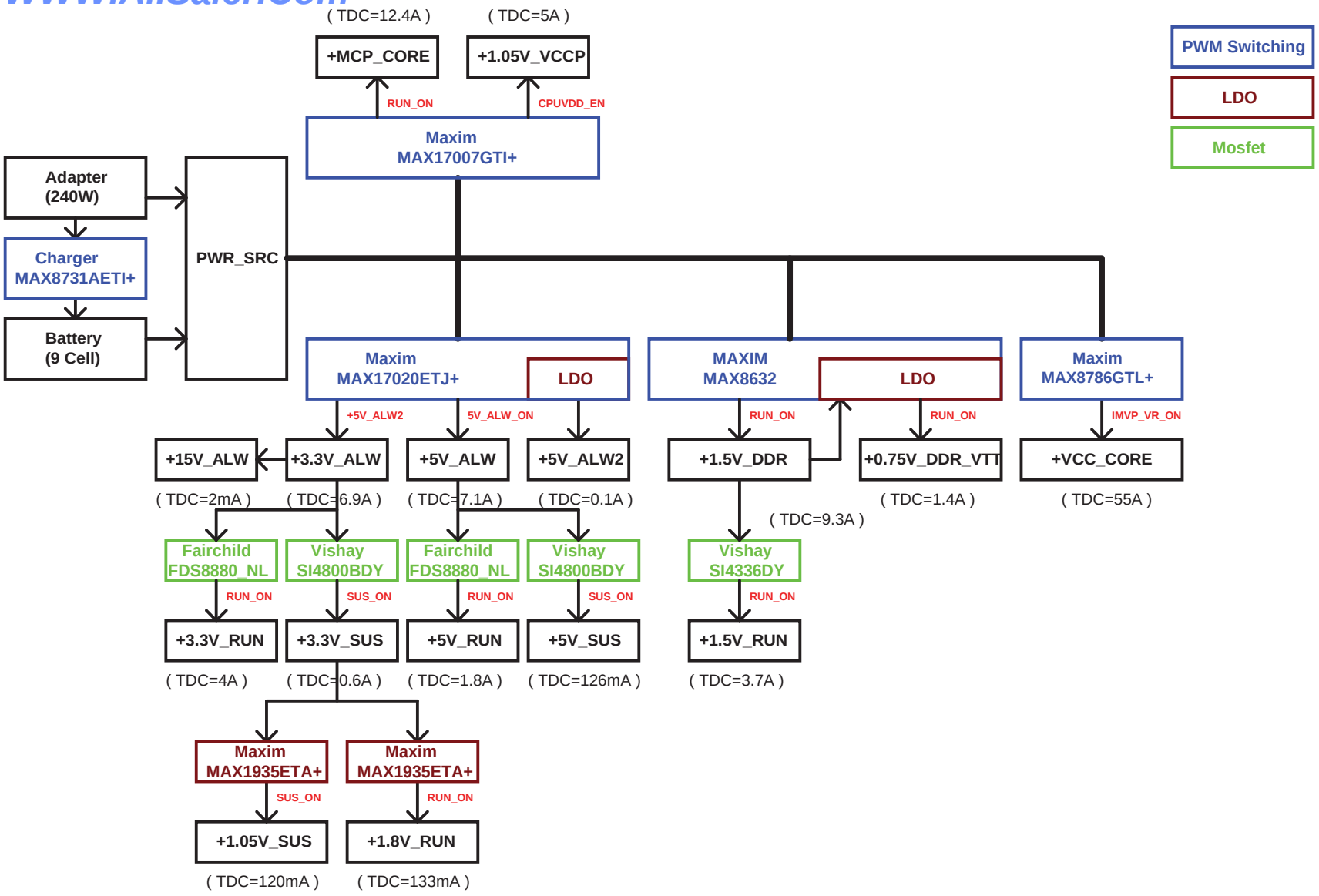

Title	Power Block Diagram	
Size	Document Number: Dell/FLEX Confidential	Rev A00
Date: Monday, March 09, 2009	Sheet 51 of 61	

WWW.AliSaler.Com

WWW.AliSaler.Com

Screw Hole

H1 NPTH7_2.8
H2 NPTH7_2.8
H3 NPTH7_2.8
H4 NPTH7_2.8
H5
H6 NPTH7_2.8
H7 NPTH7_2.8
H8 NPTH9B7_2.8
H9 NPTH9B7_2.8
H10 NPTH9B7_2.8
H11 PTH9B7_2.8
H12 NPTH9B7_2.8
H13 NPTH9B7_2.8
H14 PTH6B0_1.2
H15 PTH6B0_1.2
H16 PTH0B7_6
H17 PTH0B7_6
H18 PTH0B7_6
H19 PTH0B7_6

FID

FID1 NC, NO CONNECT TO ANY.
FID2 NC, NO CONNECT TO ANY.
FID3 NC, NO CONNECT TO ANY.
FID4 NC, NO CONNECT TO ANY.
FID5 NC, NO CONNECT TO ANY.
FID6 NC, NO CONNECT TO ANY.
FID7 NC, NO CONNECT TO ANY.
FID8 NC, NO CONNECT TO ANY.

Unused Gate

+3.3V_RUN U44C 74LVC08APW
+3.3V_RUN U44D 74LVC08APW
+5V_ALW PU12B LM393ADR

+PWR_SRC
C273 C385 C388 C445 C446 C448 0.1U/50V_0603

Moat Cap

+3.3V_RUN: C674 C675 C676 0.1U/10V; C892 C893 0.1U/10V
+5V_ALW
+MCP_CORE: C732 0.1U/10V
+1.05V_VCCP
+PWR_SRC: C389 0.1U/50V_0603
+MCP_CORE
+5V_RUN: C743 0.1U/10V
+3.3V_KBVCC
+3.3V_RUN: C243 C244 C245 0.1U/50V_0603
+PWR_SRC
+5V_RUN: C269 C272 0.1U/50V_0603
+PWR_SRC
+PWR_SRC_MXM1: C268 C271 C270 0.1U/50V_0603; C447 0.1U/50V_0603
+1.5V_DDR: C249 C264 C265 C266 C267 0.1U/50V_0603
+PWR_SRC
+1.05V_VCCP: C246 C247 C248 0.1U/50V_0603
+PWR_SRC
+5V_RUN: C744 C745 C746 C747 C757 0.1U/10V; C758 C759 C760 0.1U/10V; C767 C766 C768 C770 C769 C771 C773 C772 C774 0.1U/10V
+3.3V_RUN

+1.05V_VCCP: C721 C720 C722 C723 C727 C729 C730 C731 C752 C753 C754 C755 C756 0.1U/10V; C761 C762 2200P/50V; C889 C888 C891 C890 0.1U/10V
+3.3V_RUN
+MCP_CORE: C735 0.1U/10V
+1.5V_DDR
+1.5V_DDR: C733 C734 0.1U/10V; C748 C763 2200P/50V
+1.05V_VCCP
+1.5V_DDR: C736 C737 C738 C739 C740 0.1U/10V
+5V_ALW: C741 0.1U/10V; C749 C750 C751 0.1U/10V; C872 C873 C878 C879 C880 C887 0.1U/10V
+5V_RUN
+3.3V_RUN: C742 0.1U/10V
+3.3V_KBVCC
+5V_ALW: C240 C241 C242 0.1U/50V_0603
+PWR_SRC

Title	PAD & SCREW
Size	
Document Number	Dell/FLEX Confidential
Rev	A00
Date:	Monday, March 09, 2009
Sheet	52 of 61

WWW.AliSaler.Com

WWW.AliSaler.Com

RESET MAP

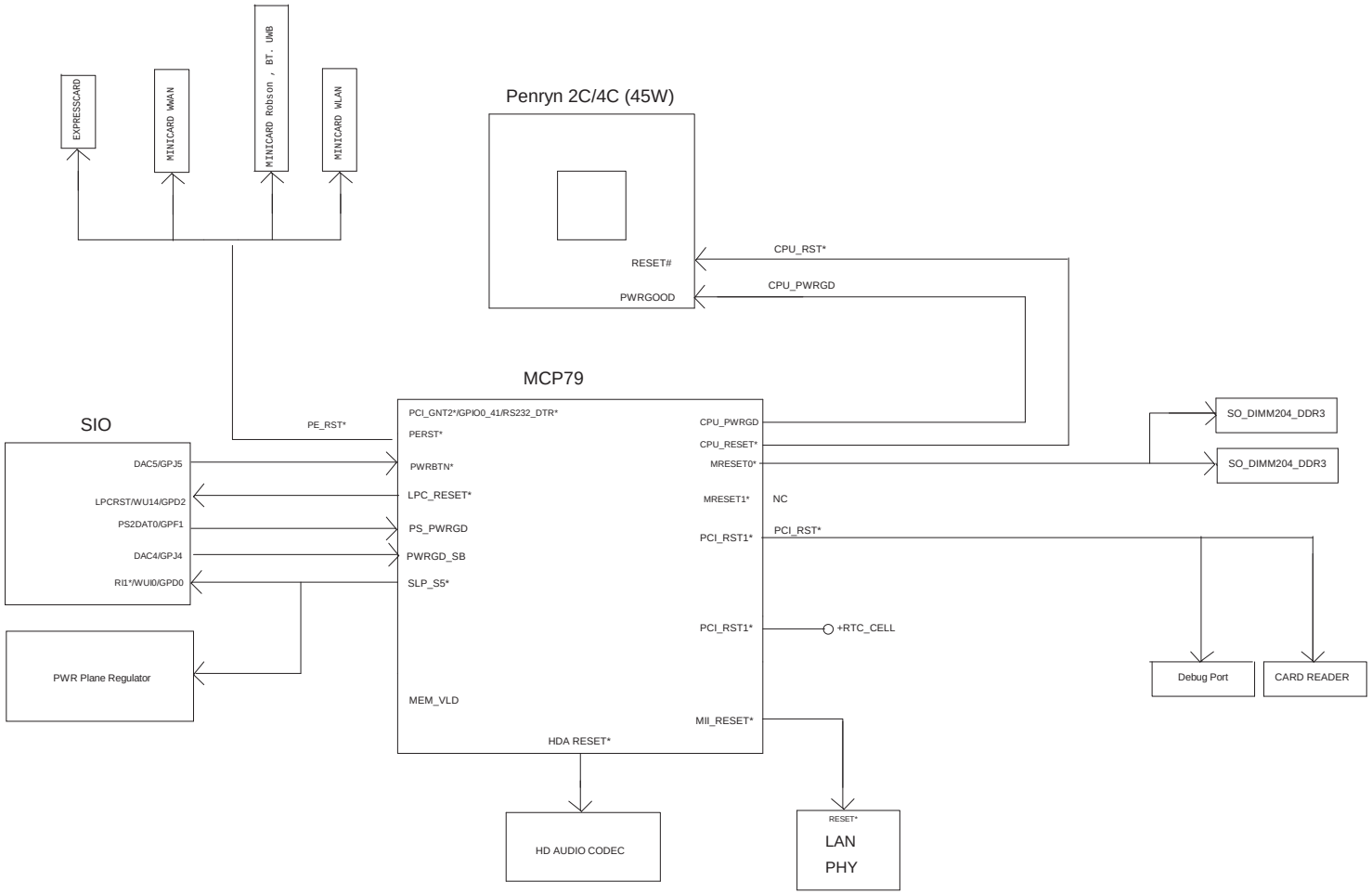

Title	PCI RESET MAP	
Size	Document Number: Dell/FLEX Confidential	Rev A00
Date: Monday, March 09, 2009	Sheet 53 of 61	

WWW.AliSaler.Com

WWW.AliSaler.Com

Media button board
1.Play/Pause
2. Stop
3. Skip Back
4. Skip Forward
5. Vol_DWN
6. Vol_UP
7. Wireless On/Off
8. AW Command
9. Stealth Mode
Total: 9 LED

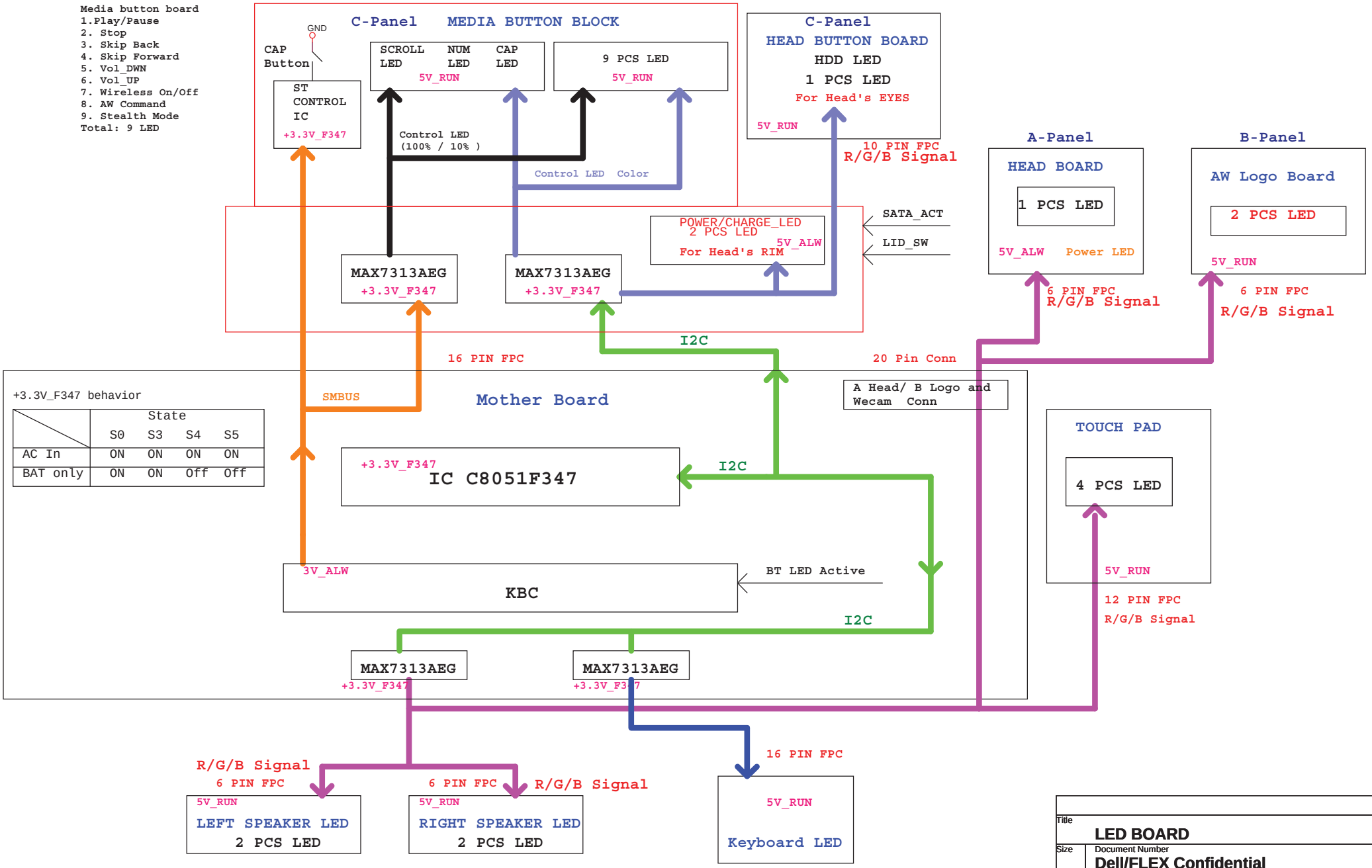

Title	LED BOARD	
Size	Document Number: Dell/FLEX Confidential	Rev A00
Date: Monday, March 09, 2009	Sheet 54 of 61	

WWW.AliSaler.Com

WWW.AliSaler.Com

Version Change List (E.E. List)

Item	Fixed Issue	Reason for Change	Rev	PG#	Modify List	B Ver#	Phast
1	EMI Modify Part of Bead		X00	44, 49	Modify Part of FL5, FL6, FL7, FL8 to BJ3216HS480NT.	X00	SSI
2	Modify Thermal sense Diode	To meet SMSC suggestion in Document AN1214.	X00	5, 6, 9, 32, 42, 49	Modify Q2, Q5, Q22, Q23, Q24, Q25, Q26, Q27, Q28, Q51, Q86, Q88, Q90, Q92, Q94, Q102, Q103, Q111, Q121, PQ37 to MMBT3904-7-F. (From MMST3904, also modify footprint)	X00	SSI
3	Modify ELC parts to NA.	To meet Dell circuit design requirment.	X00	36	1. Modify R637, R638, R639, R640, R641 to NA. 2. Modify Q50, R373, R372, R528, R529, C532, C542, C543, U118 to NA. 3. Modify U45 pin24, R635 pin2, R647 pin2 to +3.3V_ALW. 4. Modify U45 pin22 to LED_CLK, U45 pin23 to LED_DATA. 5. Add CN27 (4 pin debug header)	X00	SSI
4	Modify Footprint of Mini Card.	To separate Wini-lock& Connector	X00	30, 31	Del CN18(MiniCard WLAN Connector)& CN19(MiniCard WWAN, BT, UWB Connector)& CN20(Flash Cache Module Connector) Pin M3,M4,M5,M6.	X00	SSI
5	Move DP AUX pull-up& down resistor.	Modify by NV recommend.	X00	27	Move R191,R200 to CN10(DP conn) side.(NV recommend)	X00	SSI
6	Add LVDS DDC selection pull-up.	Add by NV recommend.	X00	26	Add R520 on U124 pin 1 and pull up to +3.3V_RUN	X00	SSI
7	Separte Head LED power	To meet Dell circuit design requirment.	X00	24	Modify CN62(CAM/ Head/ Logo Conn) pin11 to +5V_ALW& add C627 decoupling cap	X00	SSI
8	Fine tune MCP power trace.	To increase MCP power trace	X00	7, 9, 10, 13, 14, 15	1. Modify L1 pin1, L2 pin1, L3 pin2, L10 pin1 to +1.05V_VCCP. 2. DEL C427, C57, C62, C121, C122, C432, C174, C311, C217, C204, C214	X00	SSI
9	Modify ELC circuit design	To meet Dell circuit design requirment.	X00	36	1. Modify TP_LED_R_DRV#, TP_LED_G_DRV#, TP_LED_B_DRV# from U43 pin17, 18, 19 to U45 pin17, 18, 19. 2. Modify U51 pin 16 to +5V_ALW, U45 pin 1& 16 to +3.3V_ALW. 3. Modify U45 pin 22& 23 to LED_CLK& LED_DATA.	X00	SSI
10	Modify +1.5V_DDR power sequence	To meet NV power sequence recommend.	X00	46	1. Modify PR95& PR98 to connect "STBY". Also modify PR99 to "SHDN". 2. Modify PR100 to connect "+5V_ALW".	X00	SSI
11	Remove Hardware Total Power control	To solve CPU CLKSTP can't work issue.	X00	7	1. Remove R513 2. Add "H_CLKSTP" to connect MCP79& CPU directly.	X00	SSI
12	Modify Gating parts to NA.	Didn't use these Gating circuit but reserve all of these parts for MXM power gating.	X00	19, 21	Modify Q13, Q15, Q16, Q17, Q36, Q38, Q39, Q40, R189, R190, R248, R249, C310, C312, C313, C324, C326, C333, C334, C365, C366, C367, C368 and C369 to NA.	X00	SSI
13	Update all of connector lists	Update all of connector modification by M.E..	X00	24, 25, 29, 31, 35, 49	Modify footprint of CN7, CN8, CN14, CN16, CN17, CN23, CN52, CN57 and CN62.	X00	SSI
14	Add Moat capacity	Add Moat capacity by EMI request	X00	52	Add C761, C762& C763 Moat capacity by EMI request.	X00	SSI
15	Backlite final-tune.	Add reserve resistor for backlite final-tune.	X00	24	Add R520& R631 (0ohm_0603) for Backlite final-tune.	X00	SSI
16	WebCam DGND	WebCam DGND connect GND directly.	X00	24	Delete C673 to connect GND directly.	X00	SSI
17	Verify BIOS debug pin	Add test pad on Mini card pin 16, 17, 19.	X00	30	Add T29, T31, T32 on CN18 pin 16, 17, 19.	X00	SSI

WWW.AliSaler.Com

WWW.AliSaler.Com

Version change list (P.E.P. List)

Item	Fixed Issue	Reason for Change	Rev	PG#	Modify List	B Ver#	Phast
18	Add 100pF cap near by SIM con.	Verify SIM card DATA& Reset lines.	X00	31	Add C628& C629 to NA and near by CN23.	X00	SSI
19	Connect +V_TV_DAC to GND	Follow NV design guideline	X00	11	Delete R452 and connect it directly to GND.	X00	SSI
20	Modify ELC circuit	To meet Dell circuit design requirment.	X00	36	U42 changes: 1. Change VBUS(pin 8) power to +5V_SUS 2. Change REGIN(pin 7), R632 and R636 pullup to +3.3V_F347. You could use the Q50 circuit for this. 3. Generate +3.3V_F347 from +3V_ALW and control the power state by SUS_ON and ACIN. We need this power to be ON during S0/S3/S4/S5 when on AC. On Battery this power is available only in S3. 4. Connect U40 power to +3.3V_F347 power. 5. Remove all the RGB_OVERRIDE# circuit. 6. Connect LID_SW# to U42 (similar to KB_DET#_R FET circuit) 7. Connect a new GPIO LOW_BATTERY from EC to U42 GPIO. U51: Remove I2C/SMBDAT2 MUX switch. Not required as per new requirement from AlienFX. U43: Change the power to this part to +3.3V_F347 U45 Changes: 1. Change the power to this part to +3.3V_F347 2. Change SCL and SDA connection to I2C_CLK_R, I2C_DAT_R. Change R264, R262, R596 power to +3.3V_F347. Add LID_SW# circuit.	X00	SSI
21	Modify ELC circuit	To meet Dell circuit design requirment.	X00	35	Add R655, Q116, Q117, Q118, Q119 for TP_LED_DRV disable.	X00	SSI
22	Add HDD Power Bulk Capacity	To meet Dell circuit design requirment.	X00	35	Add C630 for HDD 3V power Bulk cap	X00	SSI
23	Improve thermal trip sequence	EMC4002 thermal trip sequence	X00	32	Add C631 for EMC4002 thermal trip sequence.	X00	SSI
24	Add Jumper near by DC Jack	Add Jumper for EMI parts reserve	X00	49	Add PJP12& PJP17 for EMI parts reserve.	X00	SSI
25	Delete S5, S3 pull-high resistor.	Delete EC S5, S3 PH resistor by NV recommend.	X00	33	Delete R380& R383 by NV recommend	X00	SSI
26	Add +5V_SUS gating circuit.	Add +5V_SUS gating circuit for ELC circuit	X00	50	Add PQ11, PC194, PC195 for ELC circuit.	X00	SSI
27	Remove power source cap	Remove it due to space issue.	X00	44	Remove PC31 due to space issue.	X00	SSI
28	Add EMI's modification.	Add EMI's modification.	X00	44	Page11: 1. R75 change from 0ohm to 22ohm. 2. Add 22ohm resistor*4pcs to Net RGMII_TXD0 ,RGMII_TXD1, RGMII_TXD2,RGMII_TXD3(close to MCP79SLI). Page 14: 1. C177,C173 change from 10pf to 22pf 2. R126,R257 change 0ohm to 22ohm Page24: 1. Mount C568,C569. 2. Modify R415,R416 to L63, L64. 3. Add 0.1uf caps between +5V_RUN and Gnd(close to CN7) for 1 EA (C633) 4. Add 0.1uf caps between +GFX_PWR_SRC and Gnd (close to CN7) for 2 EA (C635, C636) Page28: 1. Mount L27, L28, L46 and leave R300, R301, R302, R304, R394, R395 empty 2. Mount ESD2,ESD3,ESD5. Page 35: 1. Mount CP1,CP2,CP3,CP4,CP5,CP6.	X00	SSI

2. Add 100pf caps*3pcs to Net RSPK_LED_B_DRV# ,RSPK_LED_G_DRV#, RSPK_LED_R_DRV# to GND (close to CN6). (C638, C639, C641)
Page 40: 1. Resved a Crystal 25MHz to Lan chip(close to U33) (Y3, C204, C214)
2. C136, C695 change from N/A to 22pf
3. R538, R541 change from 0ohm to 22ohm
4. Add 100pf caps* 3pcs to Net SPD10LDE, SPD100LED, PHY-ACTLED to GND. (C644, C645, C646)
5. Add 0.1uf caps between +3.3PHY and GND for 2 EA. (C764, C765)
Page44: Mount PC67, PC76, PC60, R61,PR155,PR156 also change to 0 ohm.
Page52: Add 0.1uf caps between 3.3V_RUN and GND for 9 EA. (C766, C767, C768, C769, C770, C771, C772 , C773, C774)

Title	History - 2	
Size	Document Number Dell/FLEX Confidential	Rev A00
Date: Monday, March 09, 2009	Sheet 56 of 61	

WWW.AliSaler.Com

WWW.AliSaler.Com

Version change list (P.E.P. List)

Item	Fixed Issue	Reason for Change	Rev	PG#	Modify List	B Ver#	Phast
29	Modify 0603 resistor to JP	Mini-card power consumption more than R327 absorb.	X00	30	Delete R327 and Add JP4 to instead.	X00	SSI
30	Add 3 caps near by Vcore choke	To reduce AC droop	X00	44	Add PC155, PC161, PC163 parallel with PC78, PC65, PC61.	X00	SSI
31	Leave Power resisotr empty	Leave PR41 empty for line load modify	X00	44	Leave PR41 to empty.	X00	SSI
32	Add dampping resistor	Add dampping resistor by Ricoh recommend to final-tune media card signal.	X00	39	Add R504, R505, R534, R535, R638, R656, R657 ,R658 to final-tune Media card signal.	X00	SSI
33	Add PH resistor on display MUX	Add Pull-high resistor by TI recommend.	X00	39	Add R659, R155, R660, R56, R661, R662 pull-high resisotr by TI recommend.	X00	SSI
34	Add TPM circuit	Add TPM circuit by Dell requirement	X00	34	Add U145, R66, R69, R70, R72, R120, R415, RJ5, RJ6, C647, C648, C650, C650, C652, C653 for TPM circuit	X00	SSI
35	Change the MUX source for support Hybrid function	SN74LVC1G3157DCKR repair easier & lower cost than FUSB20.	X00	26	Change MUX source from FUSB20 (10pins) to SN74LVC1G3157DCKR(6pins). The SN74LVC1G3157DCKR amount need double. U120=> U120 & U132 (MXM/MCP LVDS DDC MUX) U121=> U121 & U134 (MXM/MCP VGA DDC MUX) U122=> U122 & U136 (MCP AUX/DDC MUX) U123=> U123 & U138 (MXM/MCP DP AUX MUX) U119=> U119 & U144 (MXM DP AUX/DDC MUX) U126=> U126 & U143 (MXM/MCP HDMI DDC MUX) U124=> U124 & U140 (MCP MEM& LVDS SMBus MUX)	X00	SSI
36	Add test-PAD	Add test-PAD for NV software debug.	X00	12	Add test-PAD on "PCI_REQ2, MXM1_PWR_EN, WLAN_RADIO_DIS#, WLAN_PCIE_RST#, WPAN_PCIE_RST#, WWAN_PCIE_RST#".	X00	SSI
37	Update EMI solution	Update EMI solution	X00	12	Page 29: Add 0.1uF cap between +5V_HDD& GND for 5 EA. (C660, C661, C662, C664, C667). Page 33: 1. R387 change from 0ohm to 22ohm 2. R396 change from N/A to 0ohm 3. C550 change from N/A to 10pf Page 41: Add 0.1uF between GND_LAN& GND and leave empty.	X00	SSI
38	Add Jumpper& Modify power plante	Add Jumpper& Modify power plante for MXM1 power measurement.	X00	19, 52	1. Add JP20& create +PWR_SRC_MXM1 power. 2. Modify power plante of C315, C316, C317, C318, C319, C320, C268, C270, C271, C447 to +PWR_SRC_MXM1.	X00	SSI
39	Add +5V_RUN_BLOGO power gating	Add +5V_RUN_BLOGO power gating by Dell ELC request.	X00	24	Add Q72, Q123, R96, R327 to gating +5V_RUN and create +5V_RUN_BLOGO power.	X00	SSI
40	Add stitch cap	Add stitch cap between +1.05V_VCCP& GND	X00	10	Add C121, C122 stitch cap fbetween +1.05V_VCCP and GND.	X00	SSI
41	Modify resistor value. (BOM)	Modify the value to meet PCI-E high swing function.	X01	20, 22	Modify R518& R600 to 0 ohm to meet PCI-E high swing function. (MXM card internal pull-high for 10Kohm)	X01	PT
42	eSATA re-drive IC setting	Add components for eSATA re-drive setting	X01	28	Add R663& R664 for eSATA future setting use	X01	PT
43	Revise EC control pin	Remove reserve circuit after double confirm with intel.	X01	5, 6	Page5: Remove R87, Page 6: Remove R689, R690, C798, Q120& Q121 to remove Quad core detect circuit. Page 33: Modify U15 pin 98 to "FUSB31_ON#"& pin 99 to "MXM2_PRESENT#".	X01	PT

WWW.AliSaler.Com

WWW.AliSaler.Com

Version change list (P.E.P. List)

Item	Fixed Issue	Reason for Change	Rev	PG#	Modify List	B Ver#	Phast
44	Fine tune 1394 signal (BOM)	Fine tune 1394 signal	X01	39	Modify R465, R466, R467& R468 to 54.9ohm.	X01	PT
45	Add Mini-Card card detect resistor	Add pull-high restor for Mini-Card detect	X01	30, 31	Add R380, R383, R402, R416& R452 for Mini-card detect level.	X01	PT
46	Add CAM power control circuit	Driver of CAM can't shut power down	X01	24, 36	Page 24: Add Q73, C668, C311. Page 30: Add R687 pull-high resistor& U41 pin20 for "CAM_PWR_ON"	X01	PT
47	Modify Media Card signal dampping resistor. (BOM)	Modify Media Card signal dampping resistor for EMI signal fine-tune	X01	39	Modify R504, R505, R534, R535, R638, R656, R657, R658& R482 to 27ohm for EMI signal fine-tune.	X01	PT
48	Imporve X'tal timing. (BOM)	To improve X'tal timing by Vendor suggestion.	X01	14, 33, 34	Modify C185, C186, C551& C552 to 15pF and modify C597& C598 to 20pF	X01	PT
49	Fine tune MXM sequence (BOM)	Fine tune MXM power sequence for reliability	X01	32, 42	P32: Delete R223, R224, R530& R374 and Add R607, R608, R487, R488, C794& C795 then connect to "MXM1_35VOK" P42: Modify R567 to 20Kohm and add C775 to GND.	X01	PT
50	Fine tune Media Card signal	Fine tune Media Card signal for EMI& reliability	X01	39	Add R689, R690, R693& R694 (27ohm) for Media Card signal fine tune.	X01	PT
51	For "PE0_PRSNT16#" It need a SW control (MXM_ON#).	When "Hybrid" enabled and MXM_ON# assert to low, 2 of MXM cards PCIECLK will be active.(NV suggest)	X01	10	Stuff R78 and Unstuff R67& R424	X01	PT
52	For GPIO_47 it need to connect "MXM1_PRESENT#"	SBIOS used GPIO_47 to do a judgment whether MXM cards on board.(NV suggestion)	X01	10	Add R141	X01	PT
53	Unstuff DP HPD 100K pull low resistors.	MXM card has internal pull low.Follow MXM3.0 Design guideline.	X01	10, 27	Unstuff R503& R513	X01	PT
54	V_RGB_DAC can be shorted to GND if RGB interface is not used.	Follow MCP79 checklist v08	X01	11	Unstuff L6, C138& C139. Del C137 and Add R87	X01	PT
55	Follow MXM design guideline seqence	Follow MXM design guideline seqence.	X01	19, 21	Modify CN4& CN5 pin278, 280 to +3.3V_RUN. Change C327, C328, C329& C359 pin1 from +3.3V_MXM1(+3.3V_MXM2) to +3.3V_RUN. Modify CN4& CN5 pin1, 3, 5, 7, 9 to +5V_RUN. Change C829, C321, C322, C855, C325, C323, C830, C665, C654, C858, C666& C657 pin1 from +5V_MXM1(+5V_MXM2) to +5V_RUN. Add JP22 to connect +3.3V_MXM1& +3.3V_MXM2.	X01	PT
56	Fix MXM card leakage issue	Add gating circuit to fix leakage issue	X01	19, 20, 22	DEL +3.3V_RUN _HYBRID circuit.(R214,Q78,Q80,R402,C613,Q79,C614,C377) Change +3.3V_RUN _HYBRID power to +3.3V_MXM1(+3.3V_MXM2) . Stuff Q12, R185, Q14, R186, Q104, R500, Q105& R501 Unstuff R201, R582, R639& R640 Stuff Q81, R498, Q82, R499, Q20, R196, Q21& R197 Add D56& D57 Unstuff R641, R652, R653& R654	X01	PT
57	Reserve cap to fine tune sequence	Reserve cap to fine tune PWR_EN sequence	X01	20, 22	Reserve 0.1uf (Unstuff) C766& C777	X01	PT
58	Fix TMDS251 leakage issue	Plug external HDMI device will cause system leakage from TMDS251 vcc pin.	X01	19, 23	Add Q76,C377,C614,C613,C377 and Add net +3.3V_MXM1_HDMI.	X01	PT
59	Update EMI solution of X01 (BOM)	Update EMI solution of X01	X01	40	Modify R683, R684, R685, R686 to 22ohm.	X01	PT

WWW.AliSaler.Com

WWW.AliSaler.Com

Version Change List (F.A.B List)

Item	Fixed Issue	Reason for Change	Rev	PG#	Modify List	B Ver#	Phast
60	Let KBC can judge 2'nd MXM card plug in.	Connect MXM2_PRESENT2# to KBC.Let KBC can judge 2'nd MXM card plug in.	X01	33	MXM2_PRESENT2# connect to U15 pin 99.	X01	PT
61	Fix press 4 second shutdown leakage issue.	Crt_Ddc_Sel (GPIO36), Dp_Sel(GPIO4), Lvds_Sel(GPIO 20), Lvds_Ddc_Sel(GPIO 21), Lvds_Mem_Ddc_Sel (GPIO6), HDMI_DDC_Sel(GPIO5) active high after press 4 second shutdown then cause leakage to +3V_RUN.	X01	23, 26	Add pull high resistors & diodes. R695, R696, R697, R698, R699, D44, D47, D48, D54, D49& D55	X01	PT
62	Delay MXM1_35VOK sequence (BOM)	Delay MXM1_35VOK sequence to control MXM thermaltrip gating.	X01	42	Add C775 Change R567 to 20K	X01	PT
63	Delete HDMI pass resistor	Remove them to improve HDMI signal	X01	23	Remove R485, R486, R487, R488, R489, R490, R491, R492, R493, R607& R608.	X01	PT
64	Add cap near by Media card controller	Add cap to improve Media card signal	X01	39	Add C217, C778, C779, C780, C781, C782, C785, C786, C787, C788, C789, C790, C791& C792	X01	PT
65	Meet SMSC EMC4002 circuit design (BOM)	Add circuit to meet SMSC suggest, also keep Dell request.	X01	32, 47	Modify R218 to 4.7K ohm and pull-high power to +3.3V_SUS Add Q78, Q79, R224& R490.	X01	PT
66	Add Dampping resistor	Add 22 ohm resistor to improve CRT signal	X01	25	Add R374& R485	X01	PT
67	Fix Keyboard LED wrong color	In order to correct keyboard LED display	X01	37	Swap CN57 pin 3, 4 pin define from R to G& G to R.	X01	PT
68	Follow NV designguide (BOM)	Modify schematic to meet NV design guideline	X01	9, 10, 11, 13, 14, 15	Modify C115, C123, C131, C161, C164, C191, C196& C198 to 2.2uF. Unstuff R100 Modify R145, R146, R211& R244 to 2.2Kohm. Modify C116 to 2.2uF. Add C65, C174& C793	X01	PT
69	Update EMI solution of X01	Update EMI solution of X01	X01	11, 19, 24, 28, 32, 35, 39, 40, 47, 49, 52	Unstuff R82, R469, R470, R471, R474, R541& C136 Stuff C204, C214, C835, C836, C837, C838, L39, L40& Y3. Add C796, C797, C798, C799, C800, C801, C802, C803, C804, C805, C806, C807, C824, C825, C864, C865, C866, C867, C869, C870, C871, C872, C873, C874, C878, C879, C880, C887, C888, C889, C890, C891, C892, C893. Move C677, C678, C679, C680, C681, C682, C683& C684 to near by CN63. Delete R549 and Add C894.	X01	PT
71	Power VDS derating modify	To meet Power VDS derating specification	X01	45, 46, 47	Stuff PR65, PR96, PR119, PR122& PC90. Stuff PC118, PC136& PC137 and modify them to 1000pF	X01	PT
72	Improve AC-in Detect function	Due to MXM had internal pull-hign at AC-in signal cause AC-in detection fail	X01	19	Add R491& Q120 and R502 to 100Kohm	X01	PT
73	Update eSATA re-drive& FSUSB31K8X IC setting (BOM)	Due to eSATA re-drive IC set to increase signal stress cause signal failure and FSUSB31K8X setting.	X01	28	Stuff R663& R664 and Unstuff R618& R619 for eSATA re-drive IC. Stuff R489 for FSUSB31K8X.	X01	PT
74	Reserve SIM card connector and stuff components to test FCM mini card connector (BOM)	In order to prepare reserve CN19 so stuff all of components for FCM and reserve SIM card connector	X01	31	Unstuff CN23, C523, C524, C525, C526, C527& ESD4. Stuff R333, R334, R335, R336, R337 R338, R339, R349, R351, R353& R355.	X01	PT

Title	History - 5	
Size	Document Number Dell/FLEX Confidential	Rev A00
Date: Monday, March 09, 2009	Sheet 59 of 61	

WWW.AliSaler.Com

WWW.AliSaler.Com

Version change list (P.E.P. List)

Item	Fixed Issue	Reason for Change	Rev	PG#	Modify List	B Ver#	Phast
75	Fine tune PCI clock (BOM)	Due to PCI clock fail of EA test report.	X01	12	Stuff C151 and modify to 15pF	X01	PT
76	Reserve unused MXM2 power sequence control circuit (BOM)	Reserve unused MXM2 power sequence control circuit	X01	42	Unstuff C724, C725, C726, C728, D45, D46, R611, R612, R613, R642, R643, R644, R645, Q100, Q101, Q102& Q103.	X01	PT
77	CRT signal improvement (BOM)	To improve CRT signal	X01	25	Modify L56, L57& L58 to BLM18BB750SN1D	X01	PT
78	Turn off SUS power in DC mode	Turn off SUS power in DC mode to prevent leackage current	X01	32, 33, 42	Modify R205 pin 1 to +3.3V_SUS. Add R492 and unstuff. Modify U15 pin 85 to "RUNPWROK#" and delete R590& Q77.	X01	PT
79	MCP79 Vcore table modify	To meet NV MCP79 designguide - DG-03328-001_v12	X01	45	Modify PR83 to 200Kohm_F. Also modify MCP79 Vcore table.	X01	PT
80	DP HPD floating (BOM)	R513 avoid DP HPD floating	X02	27	Mount R513	X02	ST
81	DP power drop too big (BOM also)	Avoid DP power drop cause by D17.	X02	27	Add R549 (0ohm_0603) and leave D17 NC.	X02	ST
82	DP leackage current issue (BOM)	Avoid DP leackage current	X02	27	Modify D33 from BAV99-7-F to RB500V-40.	X02	ST
83	HDMI TV leackage issue	Fix HDMI TV plug -in leackage from TMDS251 to system.	X02	19	Add Q77 (2N7002) for dis-charge.	X02	ST
84	Meet new inductor's droop voltage (BOM)	Meet new inductor's droop voltage	X02	44	Modify PL2, PL3, PL4 to ETQP4LR36WFC. Modify PR40& PR59 to 5.63Kohm & 316Kohm.	X02	ST
85	Media Board sometimes fail (BOM)	Improve SM bus fan-out ability for Media baord	X02	22, 33	Modify R196, R197, R273, R274 to 13Kohm	X02	ST
86	EMI solution in ST phase - 1. (BOM)	Add EMI solution	X02	28, 41	Add EMI2& EMI3. Mounted L32, L42, L43& L45 and remove R366, R371, R375, R381, R382, R411, R412& R414 by BOM change.	X02	ST
87	AMD MXM leackage current issue	Avoid AMD MXM leackage current	X02	20, 22	Add D60& D61 and Delete R640& R652.	X02	ST
88	SM bus equivalent parallel resistance low (BOM)	SM bus equivalent parallel resistance too low so increase the value of resistor	X02	23, 26	Modify R494, R495, R496, R497, R601& R604 to 10Kohm in page 23. Modify R147, R155, R156, R609, R610, R627, R659, R660, R661& R662 to 10Kohm in page 26.	X02	ST
89	eSATA output driving strength (BOM)	Improve eSATA output driving strength	X02	28	R618, R619 Mount and R663, R664 NA.	X02	ST
90	Fine tune +3.3V_MXM1 power sequence (BOM)	Fine tune +3.3V_MXM1 power sequence to close 3V of MXM card's power sequence	X02	28	C310,C312,C614 change to NA	X02	ST
91	Fine tune MXM card power enable sequence (BOM)	Fine tune MXM card power enable sequence make sure +3.3V_MXM1 power sequence to close 3V of MXM card's power sequence	X02	20, 22	R192,R256 change to 10Kohm C776,C777 Mount.	X02	ST
92	Follow TI vendor suggestion	To make sure the TMDS 251 power stable	X02	23	Add 10UF on +3.3V_MXM1_HDMI	X02	ST
93	Reserve unused power (Audio board)	Reserve unused power for Media card of Audio board	X02	39	Add 0ohm and leave empty.	X02	ST

WWW.AliSaler.Com

WWW.AliSaler.Com

Version change list (P.B. List)

Item	Fixed Issue	Reason for Change	Rev	PG#	Modify List	B Ver#	Phast
94	Fine tune +3.3V_MXM1& +5V_MXM1 power sequence (BOM)	Fine tune +3.3V_MXM1& +5V_MXM1 power sequence .	X02	19	Stuff R176& Unstuff R486	X02	ST
95	USB waveform fail	Improve USB waveform	X02	28	Stuff R394, R395& Unstuff L46, ESD5	X02	ST
96	VGA ACAVIN control (BOM)	Add VGA ACAVIN	X02	19	Add Q80 and connect to ADAPT_TRIP_SET. Modify R502 to 4.7Kohm.	X02	ST
97	3.3V OCP keeping re-try (BOM)	Make sure signal won't floating and keep original request	X02	47	Modify PR135 to 20K Add R590	X02	ST
98	EMI solution in ST phase - 2. (BOM)	Add EMI solution	X02	39	C792 change from 10pf to 15pf R482 change from 27ohm to 0ohm	X02	ST
99	Media Card signal waveform improve	Media Card signal waveform improve	X02	39	R118, R504, R505, R534, R535, R638, R656, R657, R658, R689, R690, R693& R694 change from 27ohm to 33ohm Unmoute C217, C778, C779, C780, C781, C782, C785, C786, C787, C788, C789, C790, C791& C792.	X02	ST
100	1.5V power regulator level modify (BOM)	Modify 1.5V power regulator level	A00	46	Modify PR221 to 80.6Kohm	A00	MP
101	Fix 1.5V power non-modification (BOM)	Fix 1.5V power non-modification	A00	46	PR214& PR221 un-stuff	A00	MP
102	Fine tune +3.3V_MXM1& +5V_MXM1 power sequence (BOM)	Fine tune +3.3V_MXM1& +5V_MXM1 power sequence .	A00	19	Unstuff R176& stuff R486	A00	MP
103	Fine tune MXM card power enable sequence (BOM)	Fine tune MXM card power enable sequence make sure +3.3V_MXM1 power sequence to close 3V of MXM card's power sequence	A00	20, 22	R192,R256 change to 0ohm C776,C777 Unstuff.	A00	MP
104	Modify Display Port HPD vlotage sense.	Modify Display Port HPD vlotage sense to meet NV checklist	A00	27	Modify R65 to 1Kohm	A00	MP

Title: History - 7

Size | Document Number: Dell/FLEX Confidential | Rev: A00

Date: Monday, March 09, 2009 | Sheet 61 of 61

WWW.AliSaler.Com