WWW.AliSaler.Com

ASPEN

UMA MV - BUILD

FINAL BUILD 2004.12.13

DATE	CHANGE NO.	REV

	EE	DATE	POWER	DATE
DRAWER				
DESIGN				
CHECK				
RESPONSIBLE				

SIZE = 3 VER :

FILE NAME : XXXX-XXXXXX-XX

P/N XXXXXXXXXXXX

INVENTEC

TITLE ASPEN-UMA

SIZE	CODE	DOC. NUMBER	REV
A3	CS		

SHEET OF

WWW.AliSaler.Com

TABLE OF CONTENTS

PAGE

5- DC& BATTERY CHANGER

6- SELECT & BATTERY CONN
7- SYSTEM POWER(3V/5V/12V)
8- SYSTEM POWER(V1.2L/V2.5S)
9- SYSTEM POWER(VGAVCC/V1.5A)

10- D/B SYSTEM POWER(V1.8/VCCP)
11- CPU POWER(VCC_CORE)
12- SYSTEM POWER (V0.9)
13- POWER(SLEEP)
14- POWER(SEQUENCE)
15- CLOCK_GENERATOR
16- DOTHAN-1
17- DOTHAN-2
18- DOTHAN-3
19- DOTHAN-4
20- THERMAL&FAN CONTROLLER
21- ALVISO-1
22- ALVISO-2
23- ALVISO-3
24- ALVISO-4
25- ALVISO-5
26- DDR2-DIMM0
27- DDR2-DIMM1
28- DDR2-DAMPING

PAGE

29- DVI-CONTROLLER
30- BLANK
31- BLANK
32- BLANK
33- BLANK
34- BLANK
35- CRT& SVEDIO CONN
36- LCD CONN
37- ICH6-1
38- ICH6-2
39- ICH6-3
40- ICH6-4
41- ICH6-5
42- KBC
43- FWH

44- INT.KBC/POINT DEVICES
45- SUPER I/O
46- SERIAL PORT
(SERIAL DAUGHTER BOARD)
47- BLANK
48- AC97 CODEC

49- EQ&MIC JACK
(USB DAUGHTER BOARD)
50- AUDIO AMP&HP JACK

PAGE

51- HDD CONN
52- MULTIBAY CONN
53- USB&IR CONN
(USB DAUGHTER BOARD)
54- CARDBUS CONTROLL
55- PC CARD SLOT
56- SD CARD CONN
57- BLANK

58- MINIPCI CONN
59- LAN INTERFACE-1
60- LAN RJ45 CONN
61- DOCKING CONN
62- SCREW
63- MDC CONN

64- TCPA CONN

65- BLUETOOTH
66- LED / LID_SWITCH
67- LED BOARD / CNN
(LED DAUGHTER BOARD)

WWW.AliSaler.Com

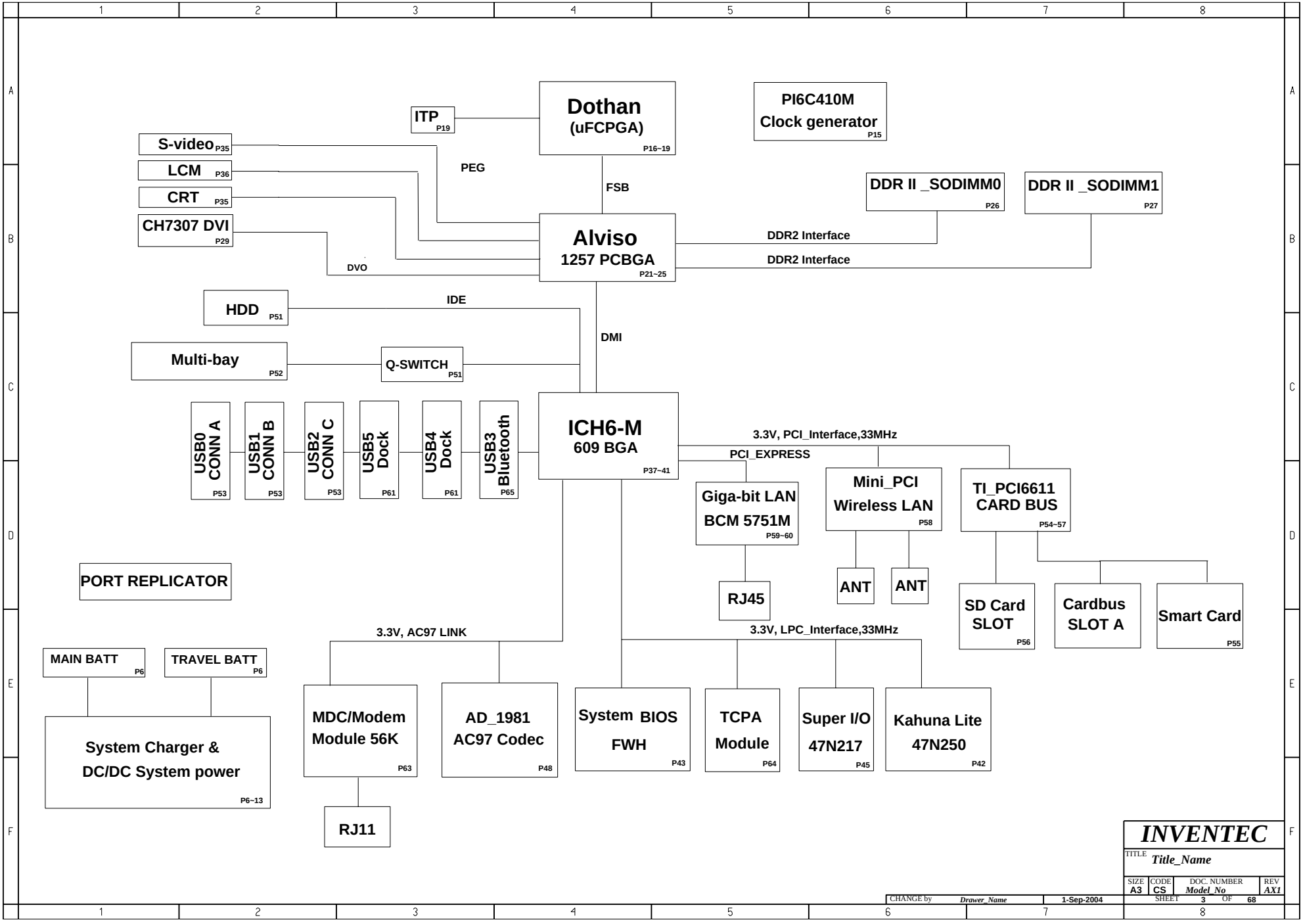

WWW.AliSaler.Com

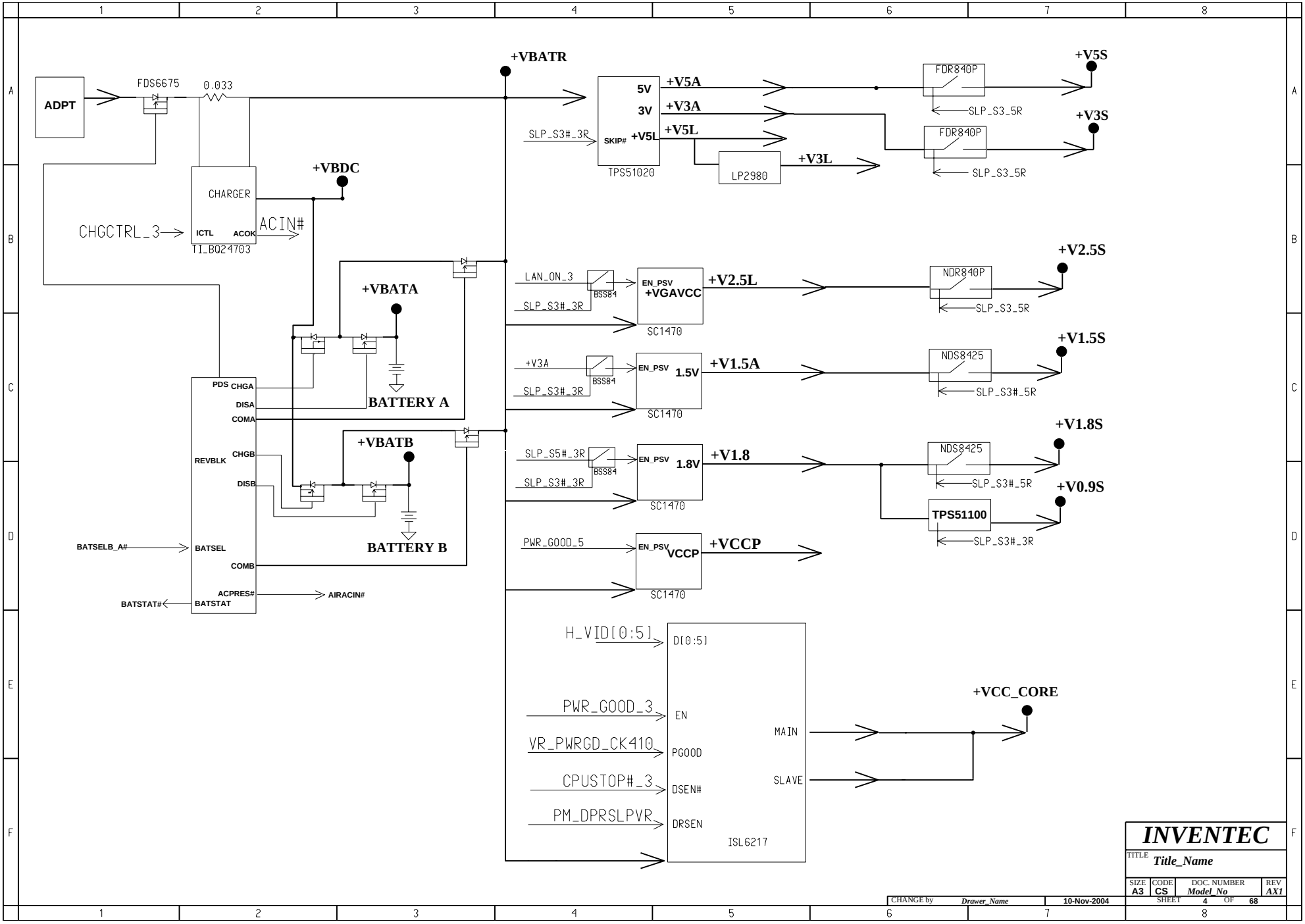

INVENTEC

TITLE Title_Name

SIZE	CODE	DOC. NUMBER	REV
A3	CS	Model_No	AX1

CHANGE by Drawer_Name 10-Nov-2004 SHEET 4 OF 68

WWW.AliSaler.Com

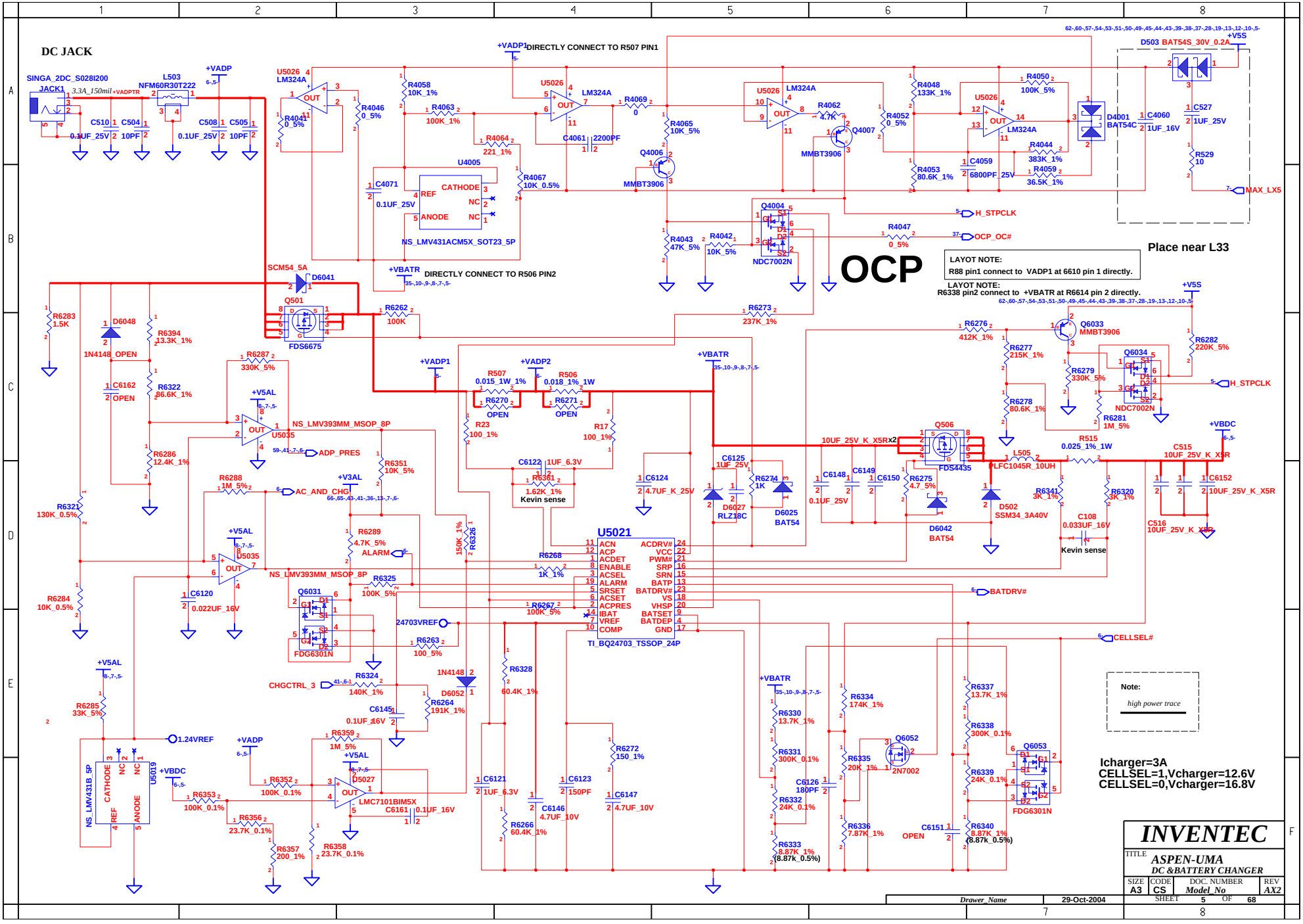

WWW.AliSaler.Com

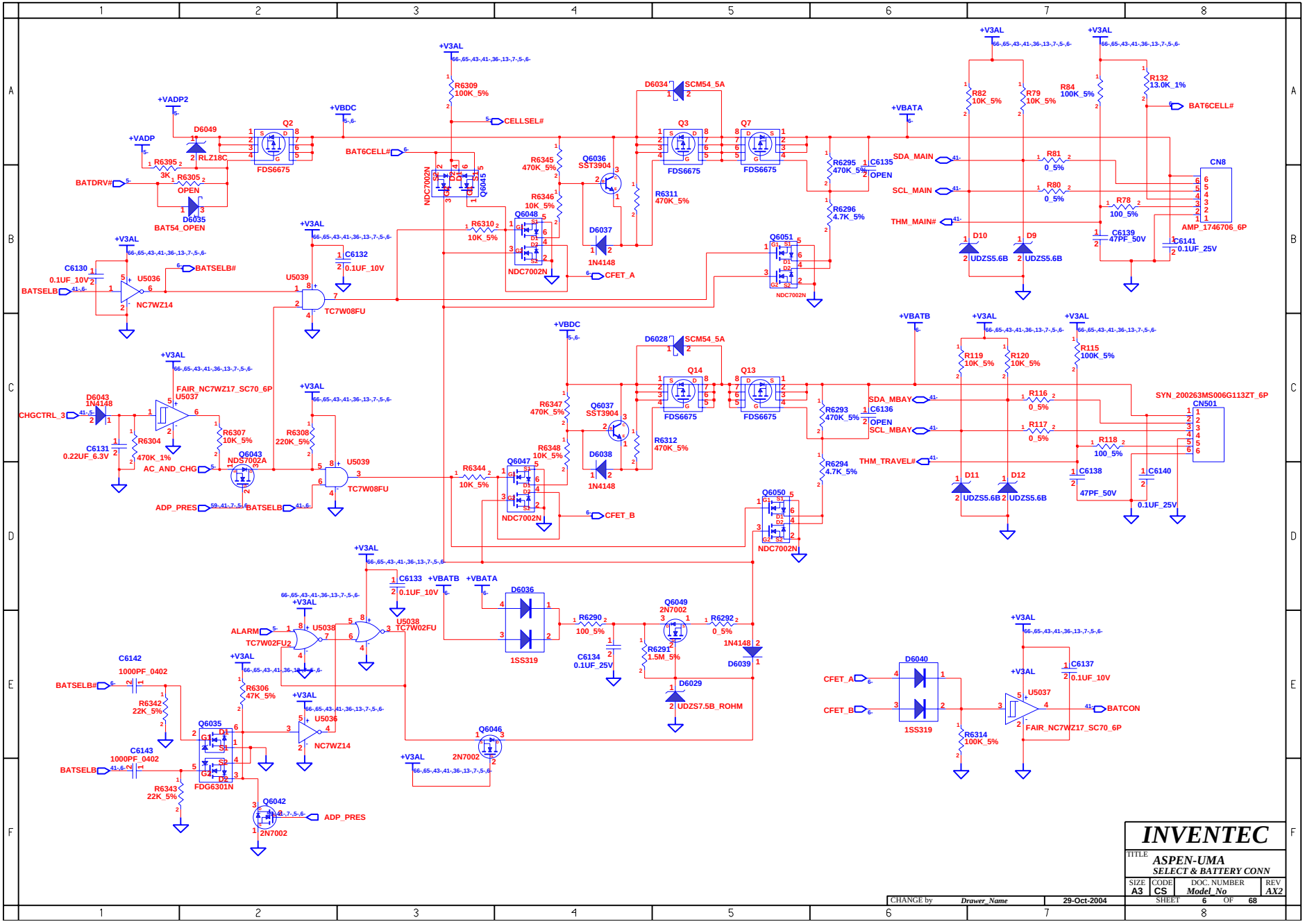

INVENTEC

TITLE **ASPEN-UMA**
SELECT & BATTERY CONN

SIZE	CODE	DOC. NUMBER	REV
A3	CS	Model_No	AX2

CHANGE by	Drawer_Name	29-Oct-2004	SHEET 6 OF 68

WWW.AliSaler.Com

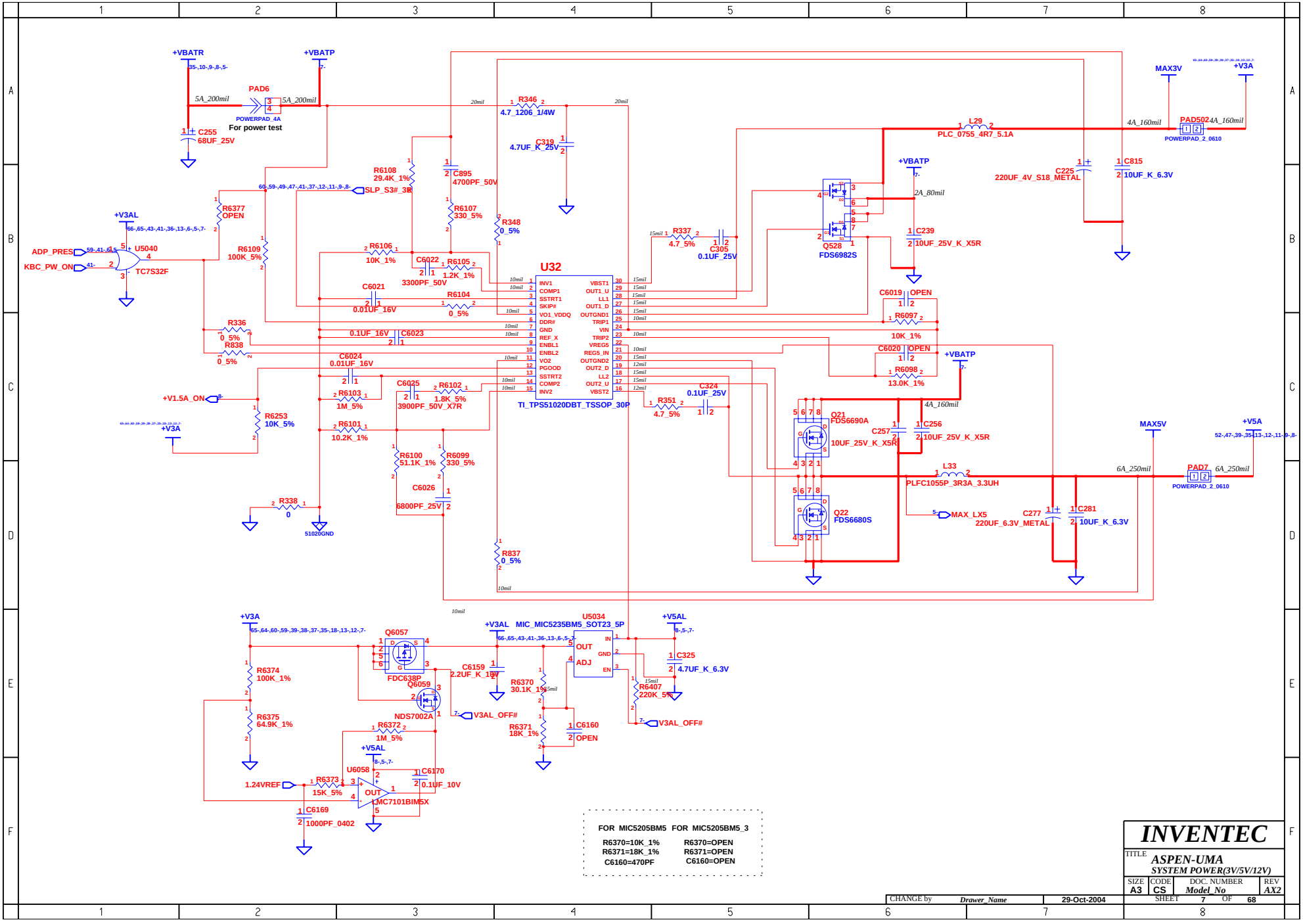

WWW.AliSaler.Com

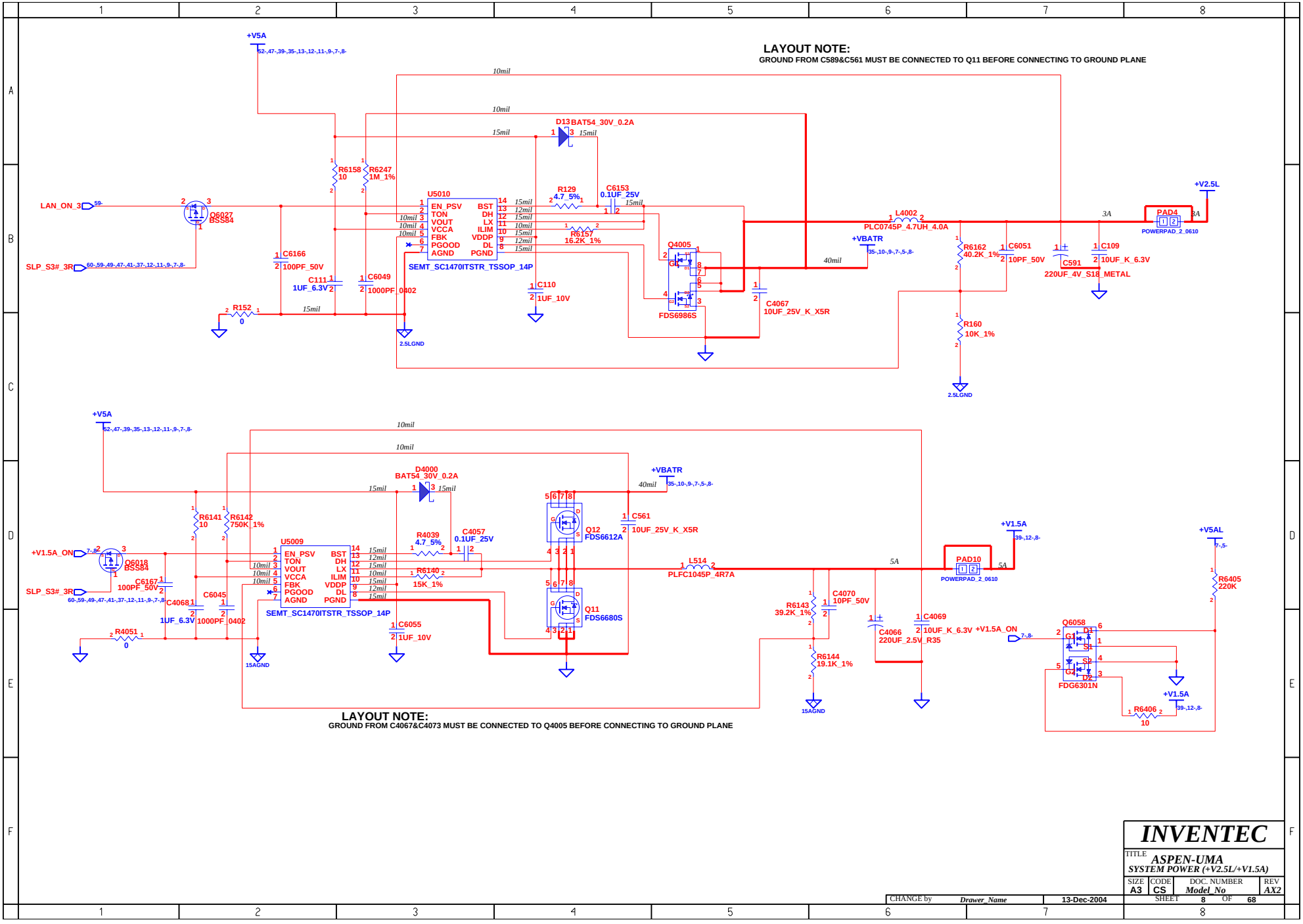

WWW.AliSaler.Com

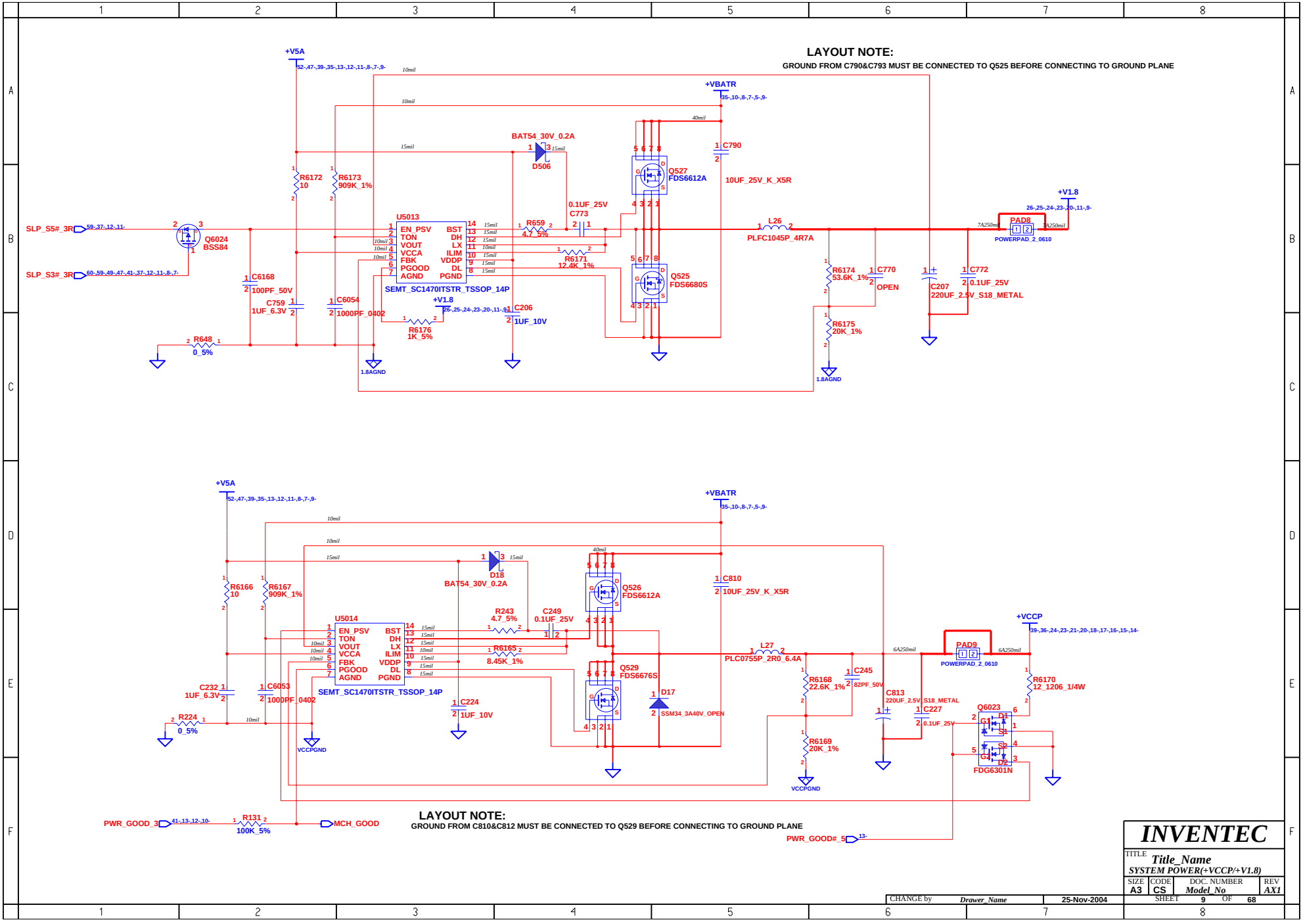

WWW.AliSaler.Com

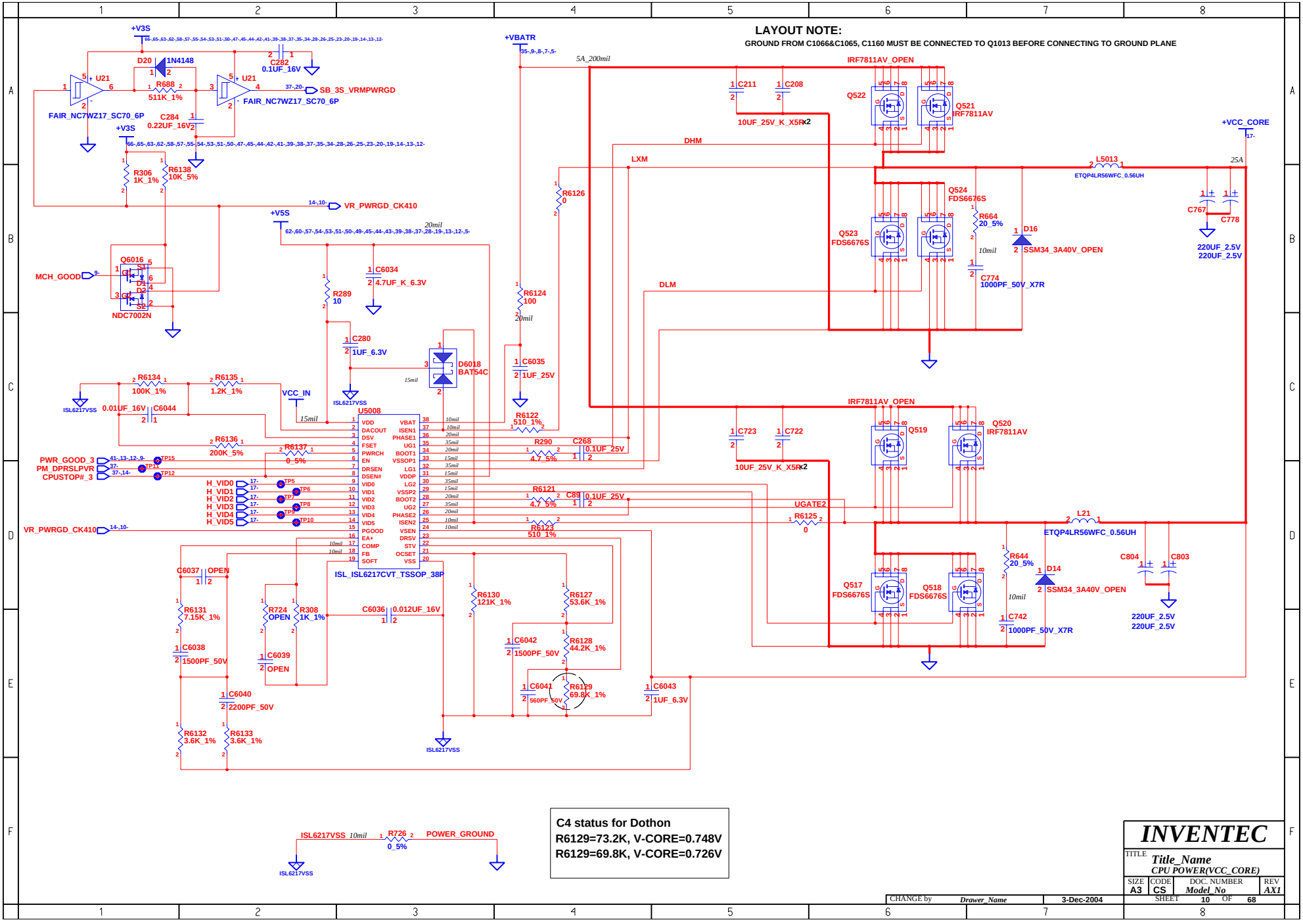

WWW.AliSaler.Com

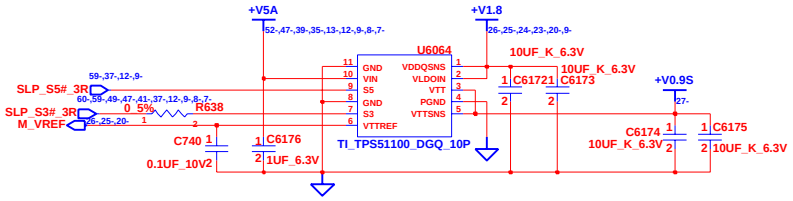

CHANGE by	Drawer_Name	28-Nov-2004	

INVENTEC

TITLE *Title_Name*
+V0.9S

SIZE	CODE	DOC. NUMBER	REV
A3	CS	*Model_No*	*AX1*

SHEET 11 OF 68

WWW.AliSaler.Com

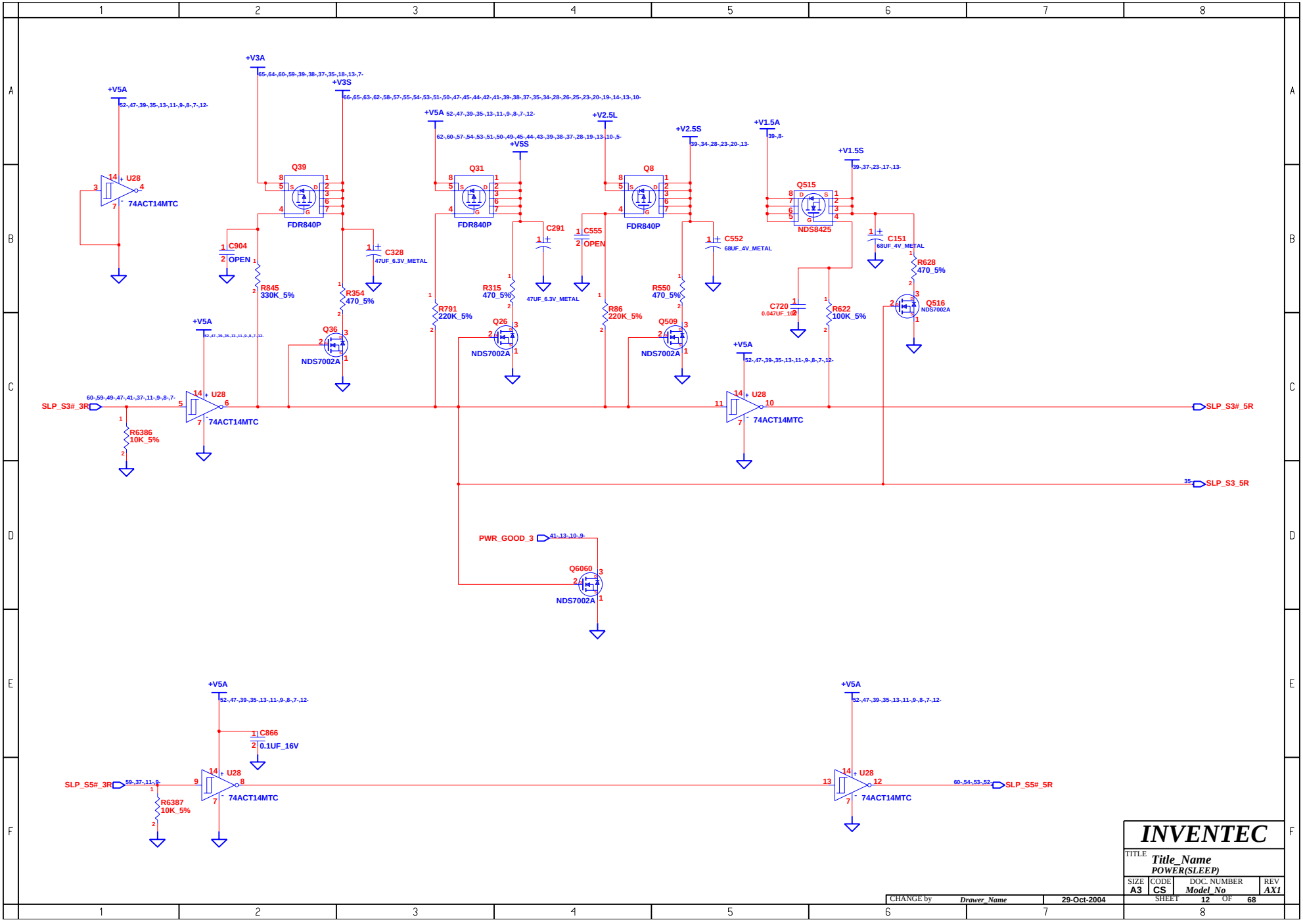

INVENTEC

TITLE Title_Name
POWER(SLEEP)

SIZE	CODE	DOC. NUMBER	REV
A3	CS	Model_No	AX1

CHANGE by Drawer_Name 29-Oct-2004

SHEET 12 OF 68

WWW.AliSaler.Com

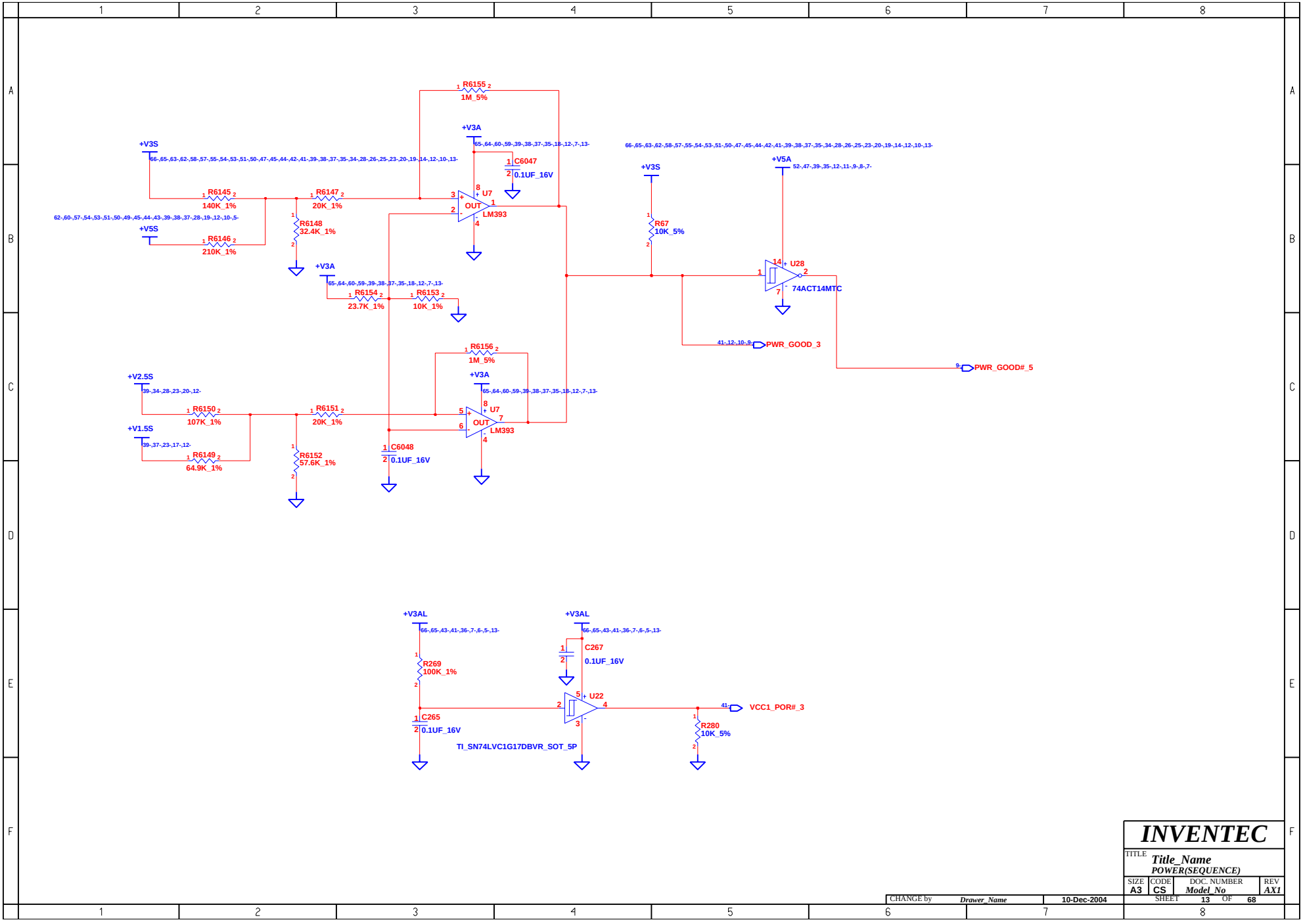

INVENTEC			
TITLE Title_Name POWER(SEQUENCE)			
SIZE A3	CODE CS	DOC. NUMBER Model_No	REV AX1
CHANGE by Drawer_Name	10-Dec-2004	SHEET 13 OF 68	

WWW.AliSaler.Com

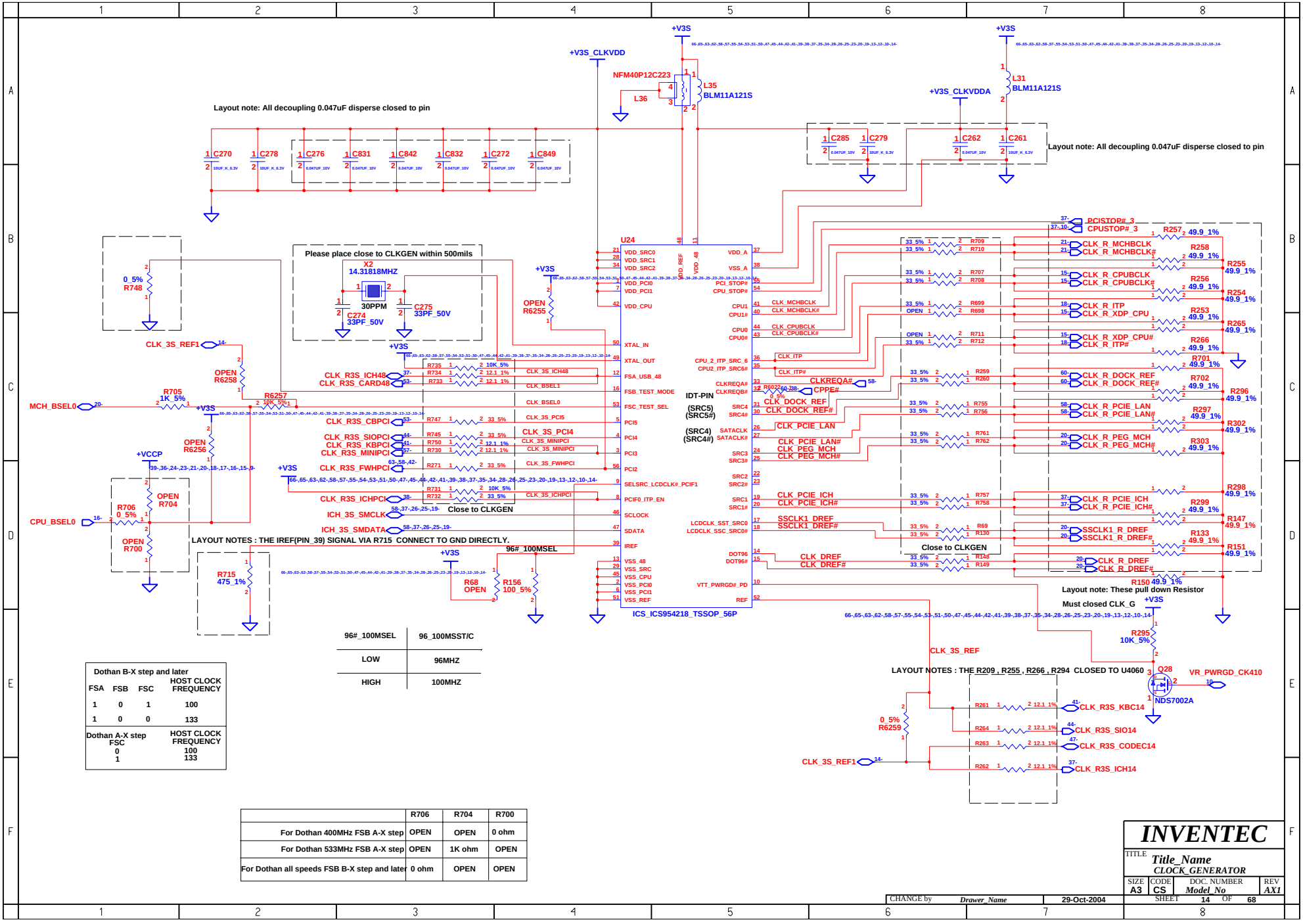

96#_100MSEL	96_100MSST/C
LOW	96MHZ
HIGH	100MHZ

Dothan B-X step and later			
FSA	FSB	FSC	HOST CLOCK FREQUENCY
1	0	1	100
1	0	0	133

Dothan A-X step	
FSC	HOST CLOCK FREQUENCY
0	100
1	133

	R706	R704	R700
For Dothan 400MHz FSB A-X step	OPEN	OPEN	0 ohm
For Dothan 533MHz FSB A-X step	OPEN	1K ohm	OPEN
For Dothan all speeds FSB B-X step and later	0 ohm	OPEN	OPEN

INVENTEC

TITLE *Title_Name*
CLOCK_GENERATOR

SIZE	CODE	DOC. NUMBER	REV
A3	CS	*Model_No*	*AX1*

SHEET 14 OF 68

CHANGE by *Drawer_Name* 29-Oct-2004

WWW.AliSaler.Com

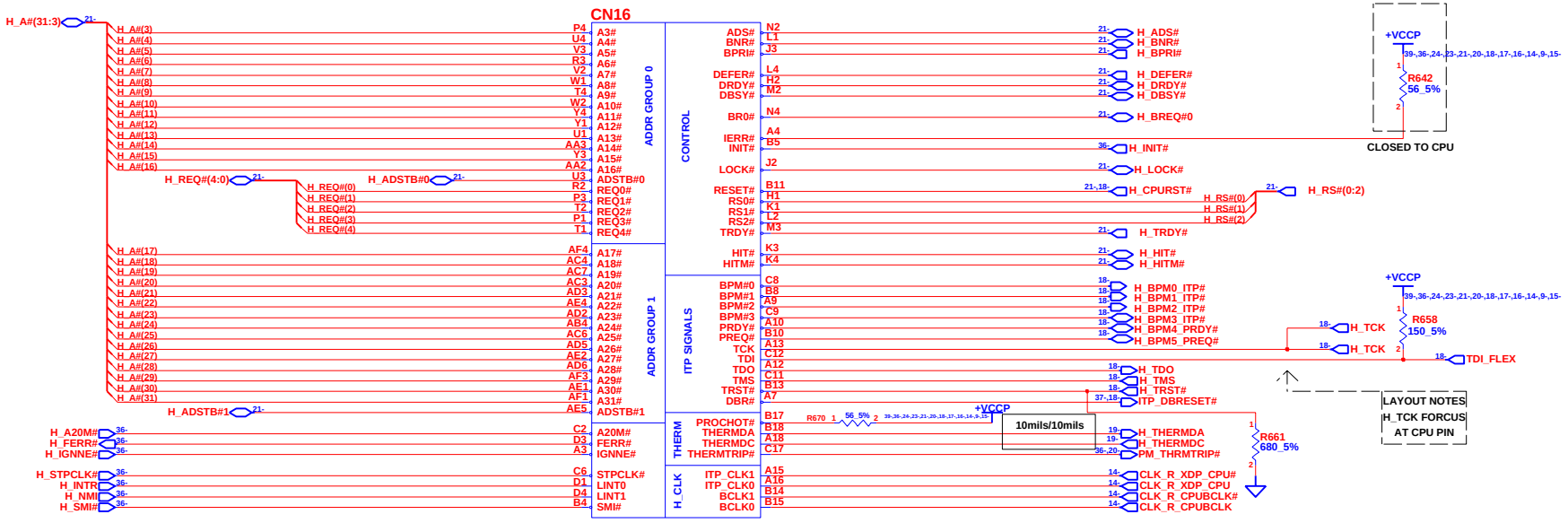

AMP_uFCPGA478M_478P_Dothan

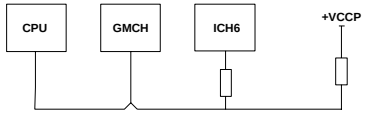

PM_THRMTRIP# should be without T at CPU

INVENTEC			
TITLE Title_Name DOTHAN-1			
SIZE A3	CODE CS	DOC. NUMBER Model_No	REV AX1
CHANGE by Drawer_Name	29-Oct-2004	SHEET 15 OF 68	

WWW.AliSaler.Com

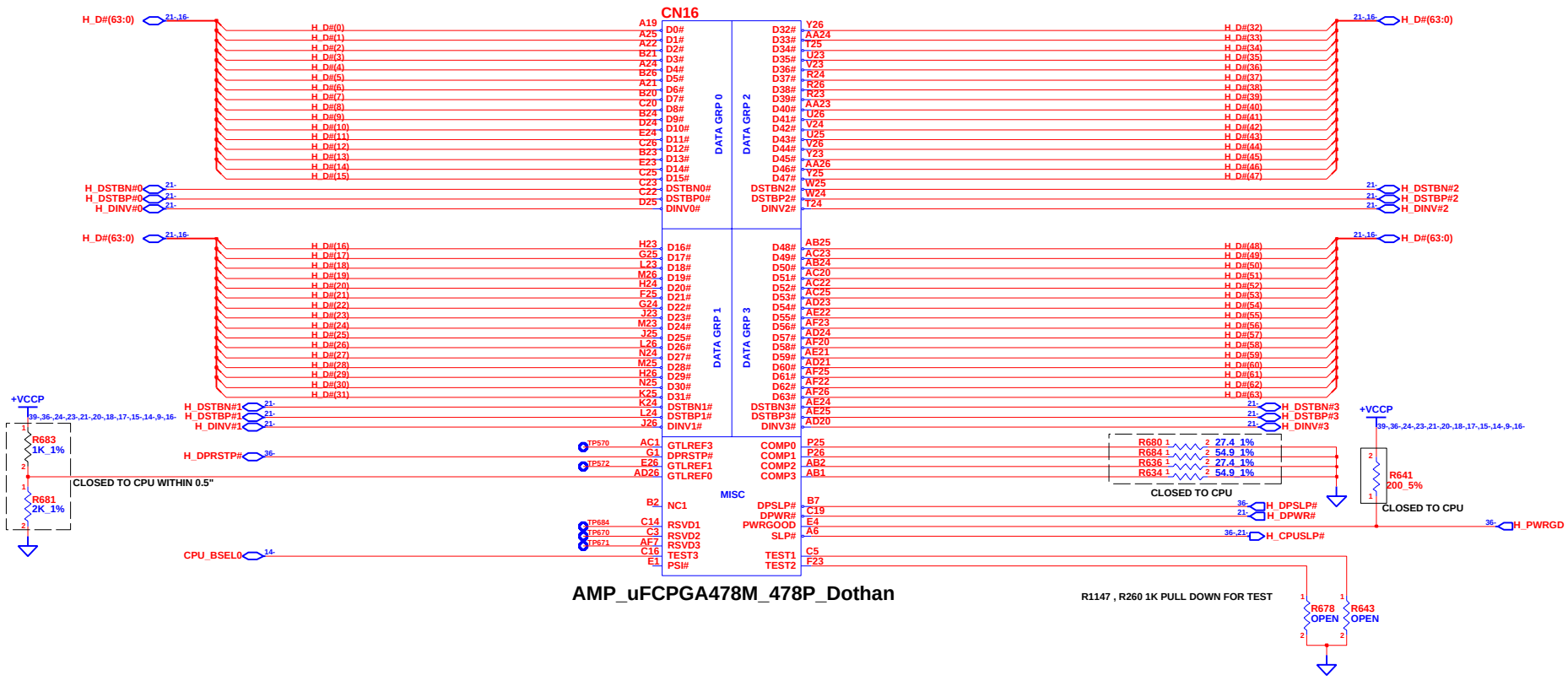

AMP_uFCPGA478M_478P_Dothan

CHANGE by	Drawer_Name	10-Sep-2004	

INVENTEC

TITLE *Title_Name*
DOTHAN-2

SIZE	CODE	DOC. NUMBER	REV
A3	CS	*Model_No*	*AX1*

SHEET 16 OF 68

WWW.AliSaler.Com

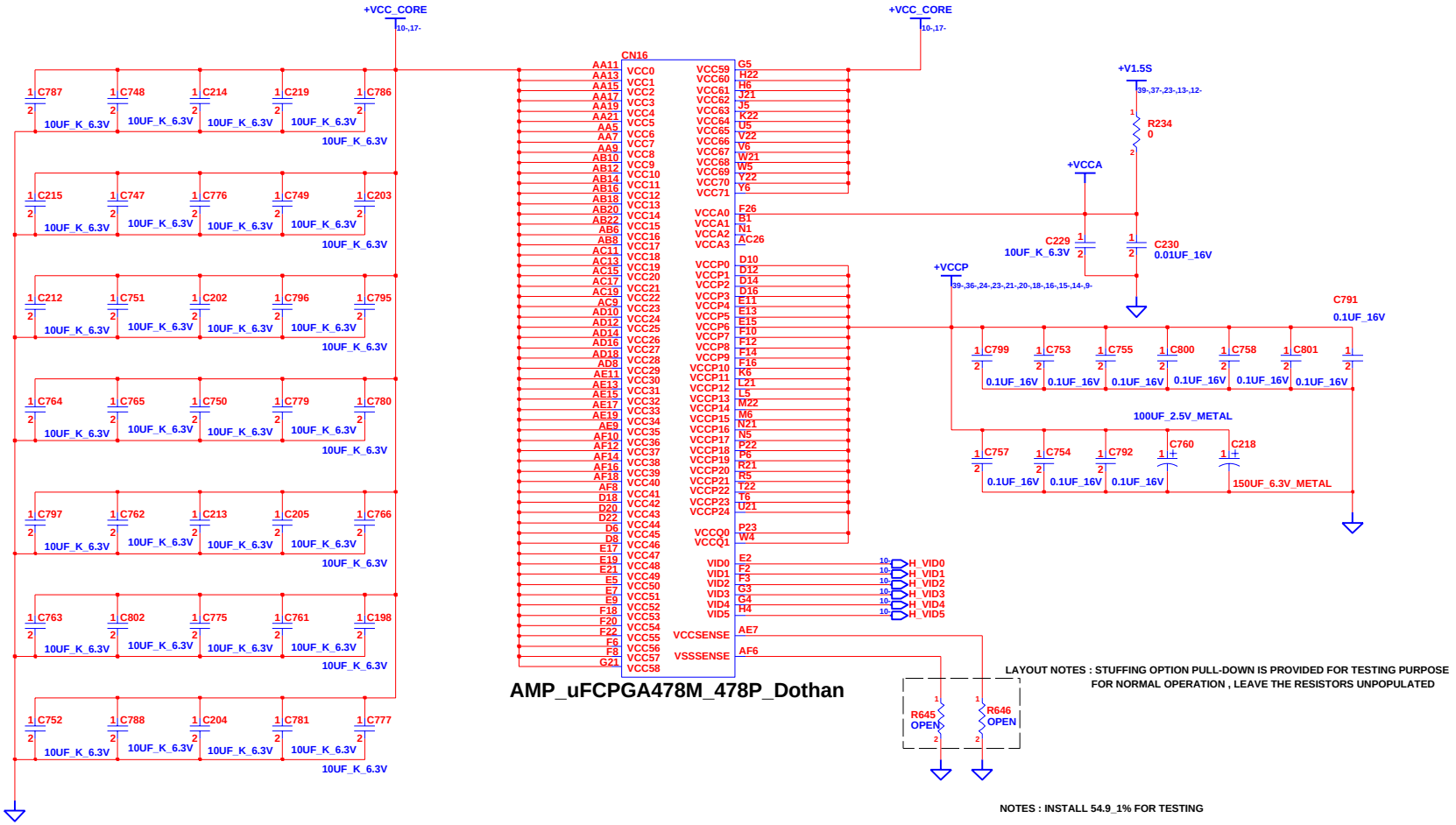

LAYOUT NOTES : STUFFING OPTION PULL-DOWN IS PROVIDED FOR TESTING PURPOSE FOR NORMAL OPERATION , LEAVE THE RESISTORS UNPOPULATED

NOTES : INSTALL 54.9_1% FOR TESTING

INVENTEC			
TITLE Title_Name DOTHAN-3			
SIZE A3	CODE CS	DOC. NUMBER Model_No	REV AX1
CHANGE by Drawer_Name	1-Sep-2004	SHEET 17 OF 68	

WWW.AliSaler.Com

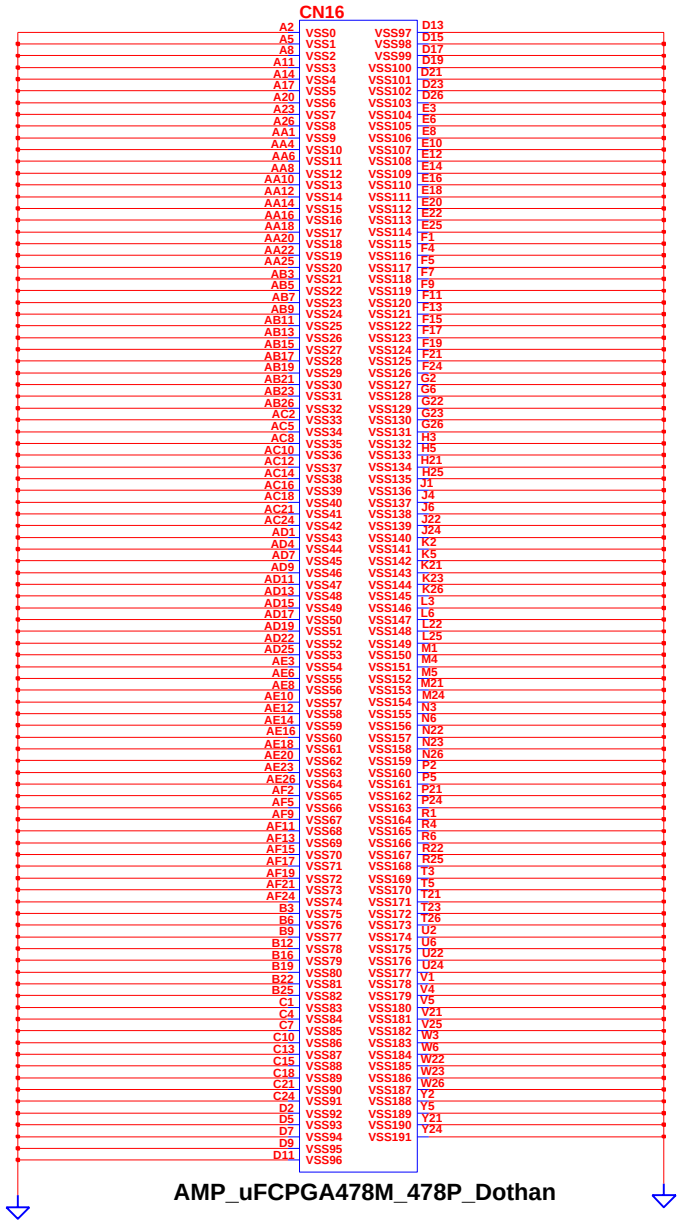

AMP_uFCPGA478M_478P_Dothan

SI2- CHANGE TO OPEN

In-Target Probe

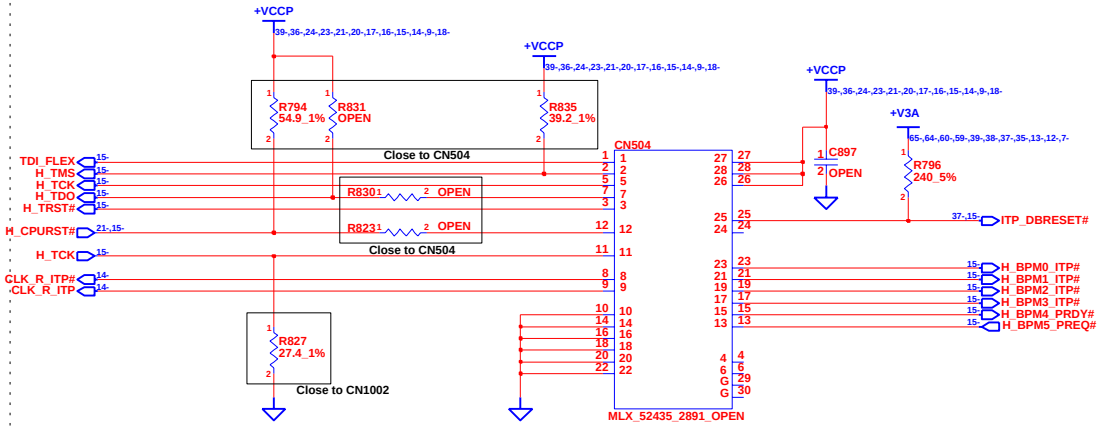

Resistor closed Within 2" of the CPU

LAYOUT NOTES : H_CPURST# PIN OF MCH_M FORK OUT INTO TWO BRANCHES ON CPU AND ITP CONNECTOR

INVENTEC			
TITLE: Title_Name DOTHAN-4			
SIZE A3	CODE CS	DOC. NUMBER Model_No	REV AX1
CHANGE by Drawer_Name	22-Sep-2004	SHEET 18 OF 68	

WWW.AliSaler.Com

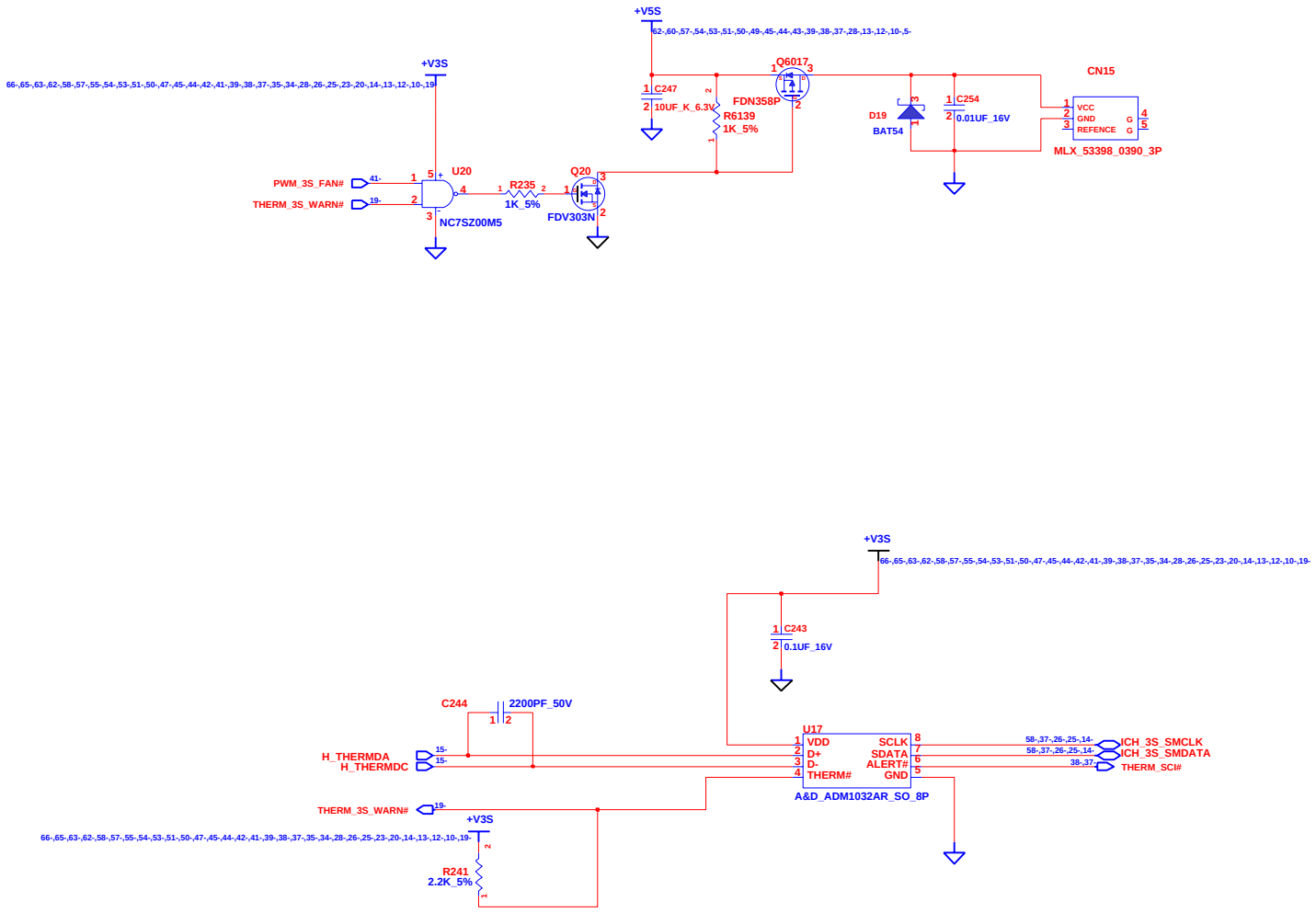

LAYOUT NOTES: PUT THE THERMAL SENSOR CLOSE TO CPU

INVENTEC

TITLE *Title_Name*
THERMAL&FAN CONTROLLER

SIZE	CODE	DOC. NUMBER	REV
A3	CS	*Model_No*	*AX1*

CHANGE by *Drawer_Name* 5-Nov-2004 SHEET 19 OF 68

WWW.AliSaler.Com

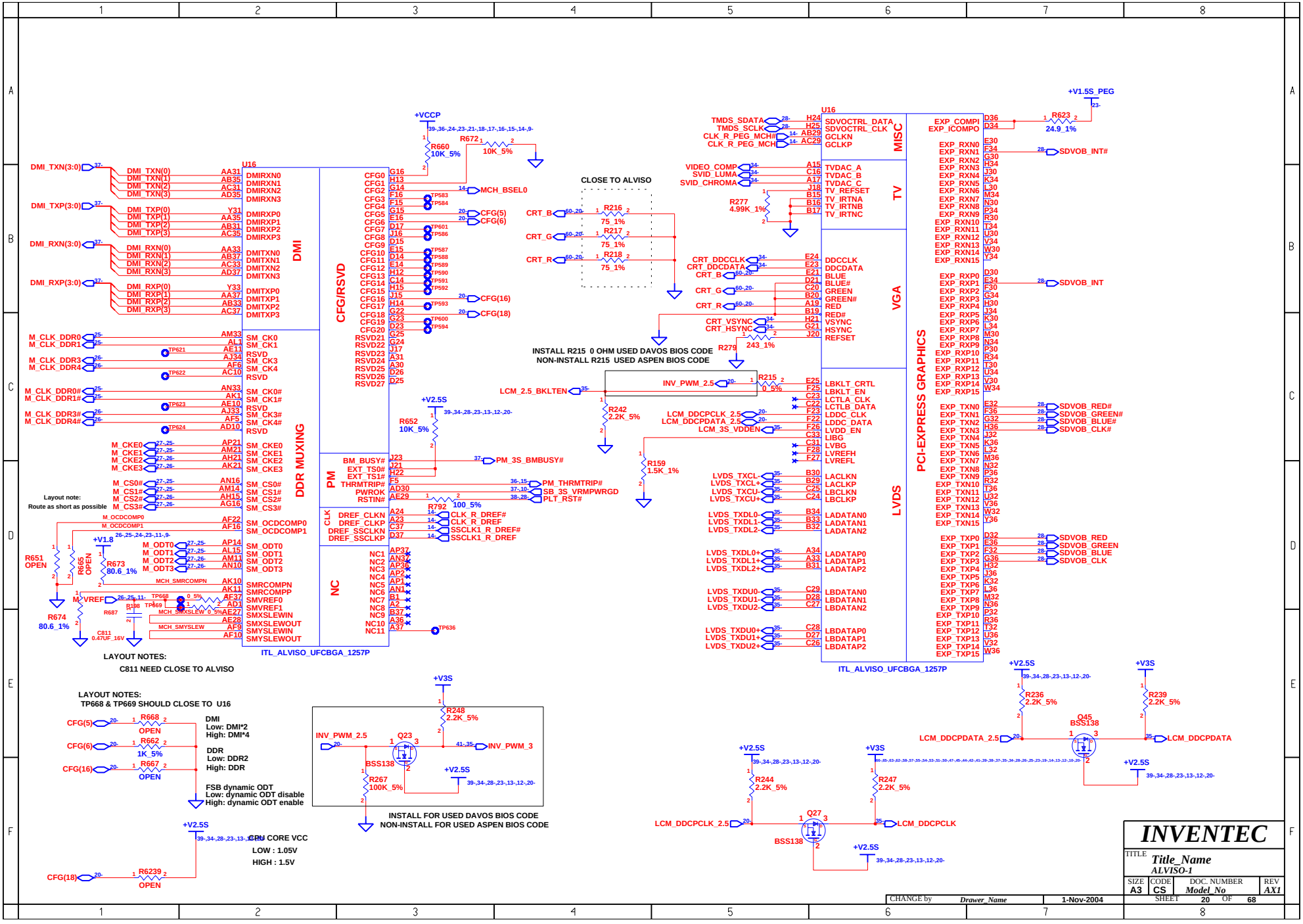

WWW.AliSaler.Com

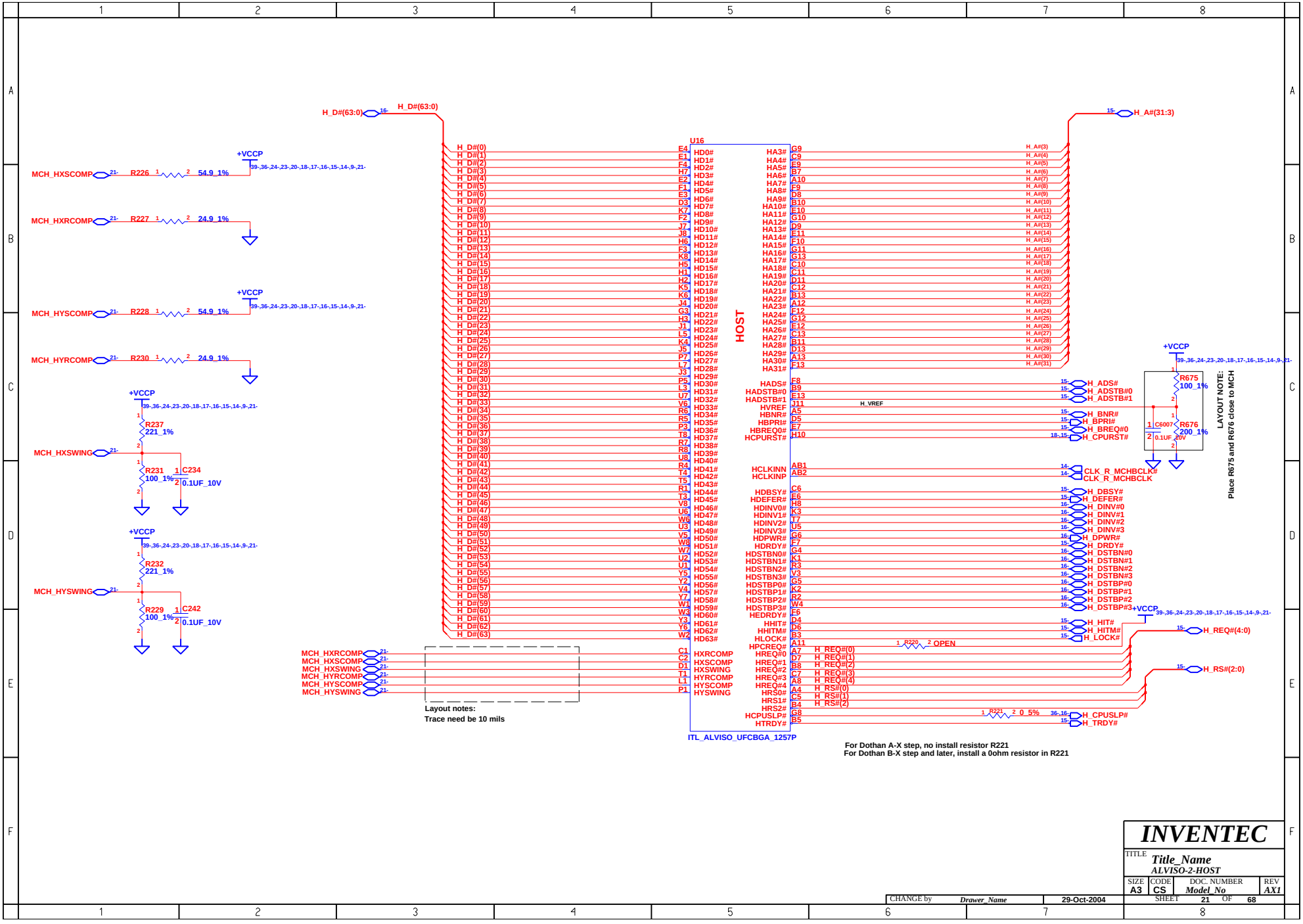

WWW.AliSaler.Com

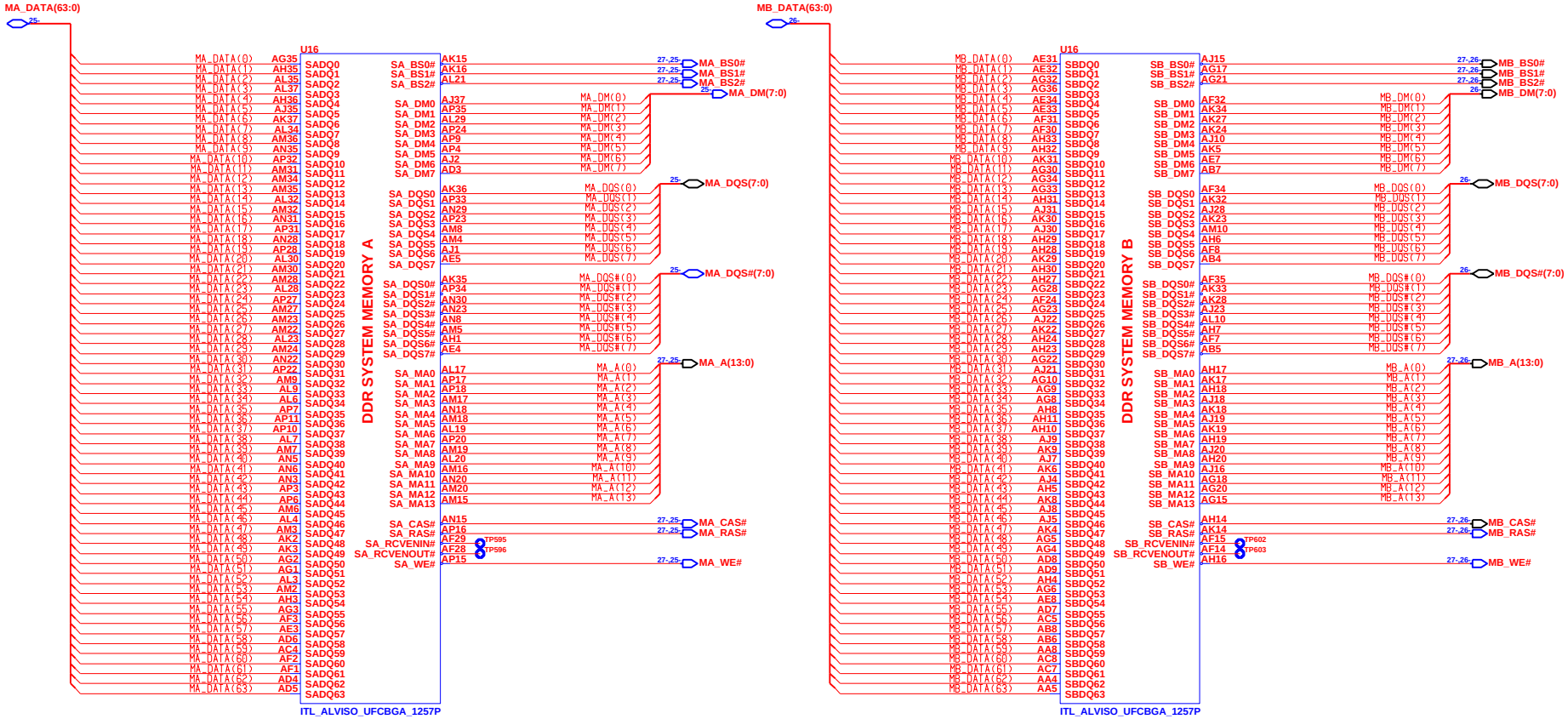

CHANGE by	Drawer_Name	1-Sep-2004	

INVENTEC

TITLE *Title_Name*
ALVISO-3-DDR2

SIZE	CODE	DOC. NUMBER	REV
A3	CS	*Model_No*	*AX1*

SHEET 22 OF 68

WWW.AliSaler.Com

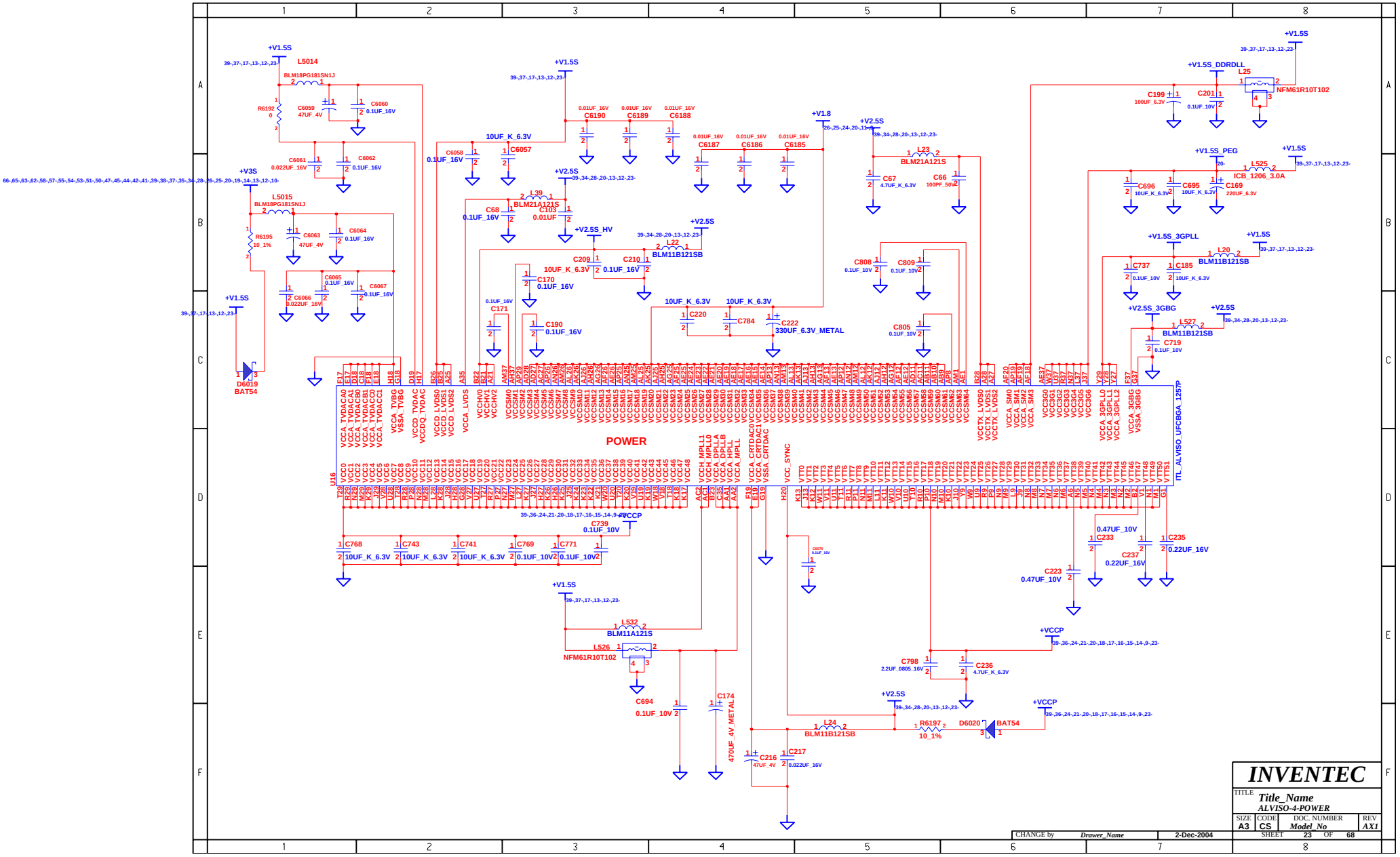

WWW.AliSaler.Com

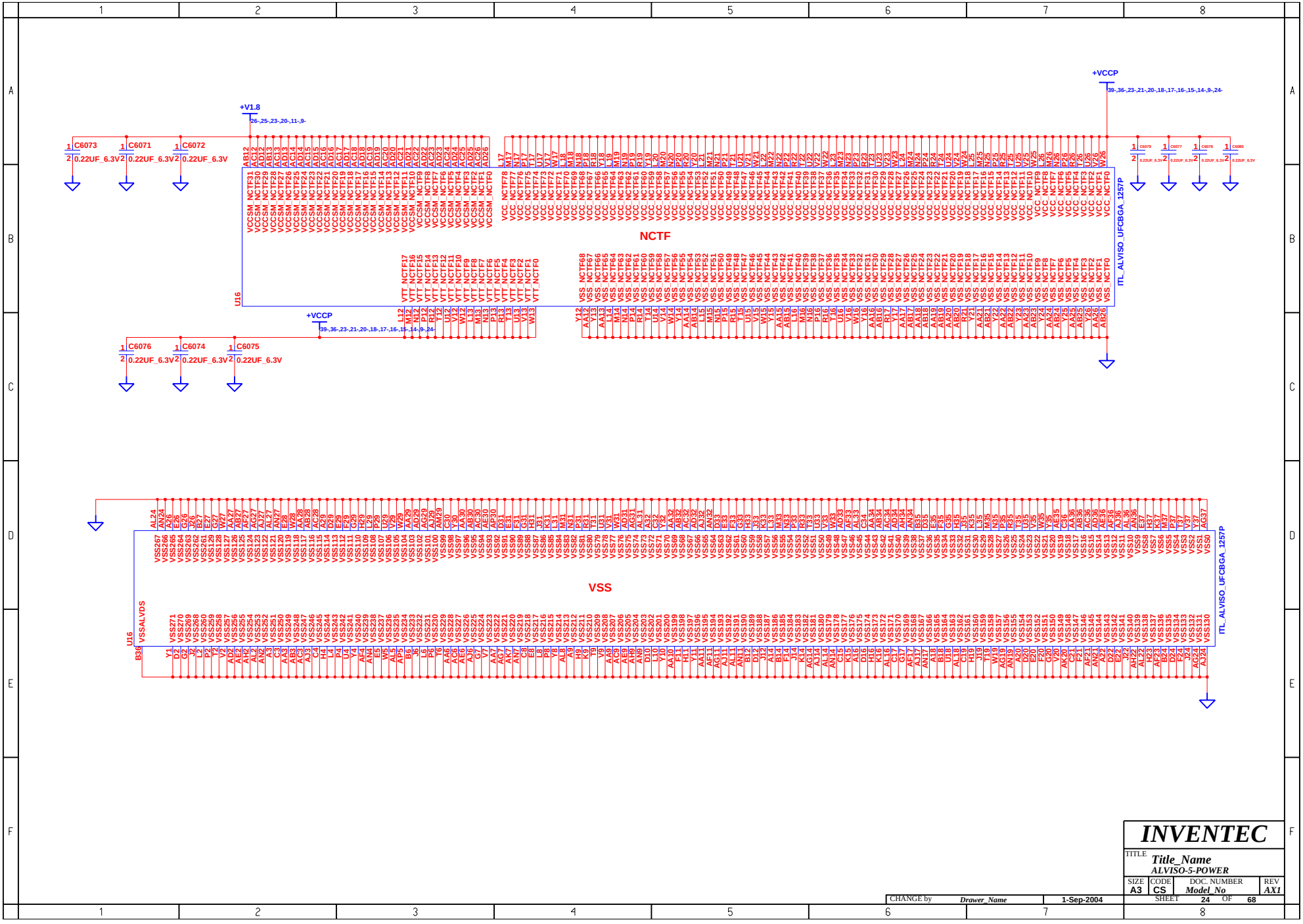

WWW.AliSaler.Com

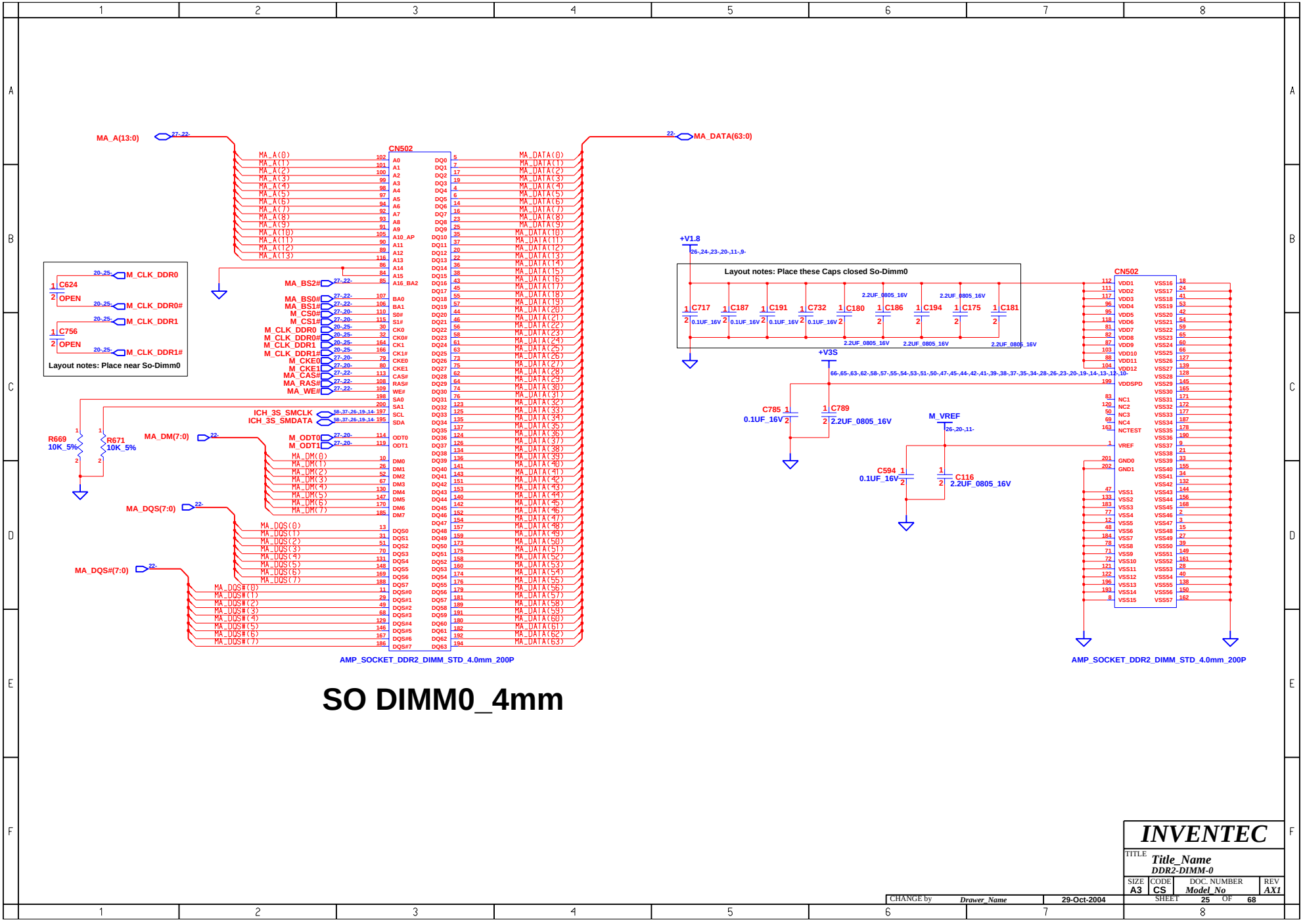

SO DIMM0_4mm

INVENTEC			
TITLE Title_Name DDR2-DIMM-0			
SIZE A3	CODE CS	DOC. NUMBER Model_No	REV AX1
CHANGE by Drawer_Name	29-Oct-2004	SHEET 25 OF 68	

WWW.AliSaler.Com

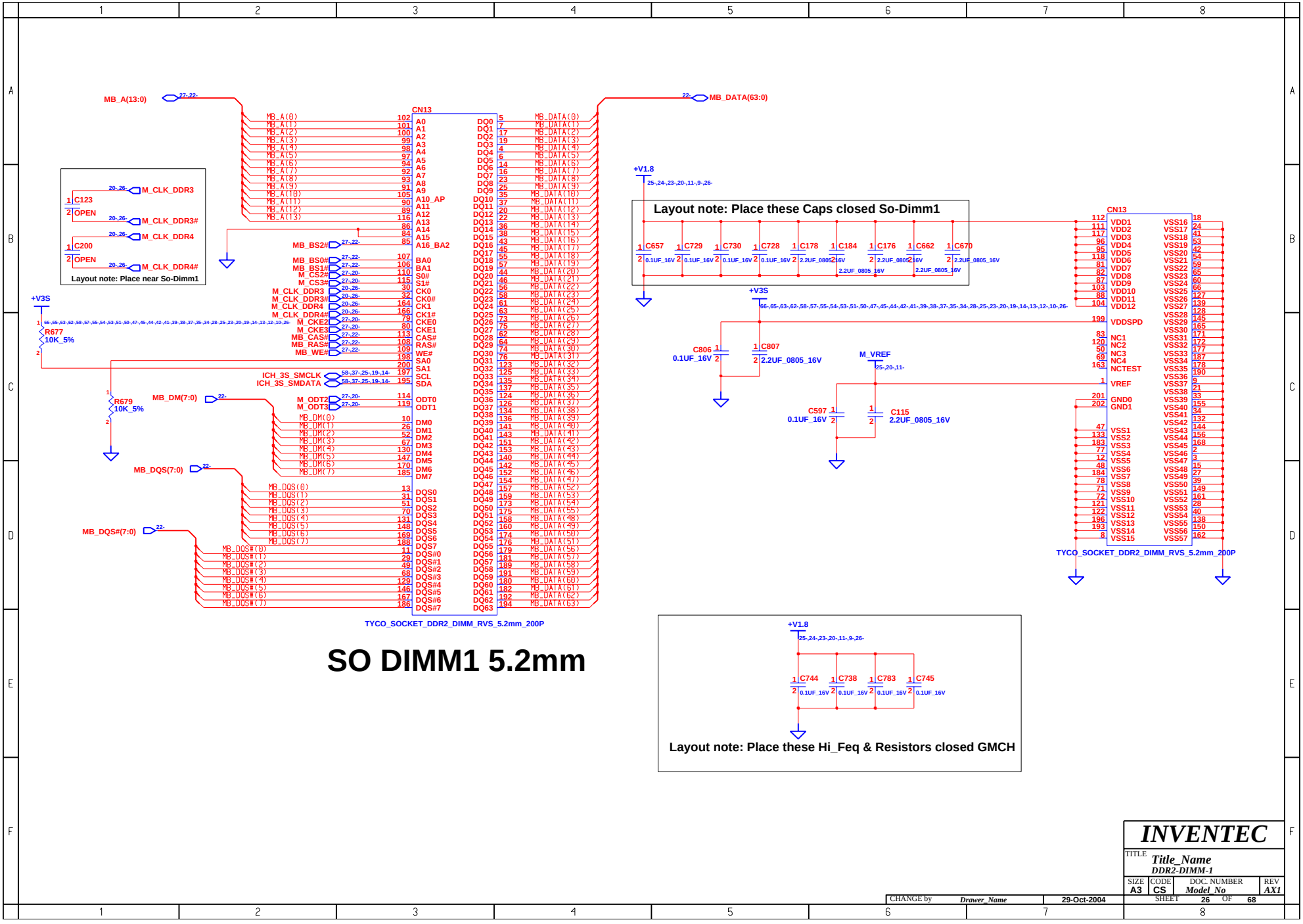

SO DIMM1 5.2mm

INVENTEC			
TITLE	Title_Name DDR2-DIMM-1		
SIZE A3	CODE CS	DOC. NUMBER Model_No	REV AX1
CHANGE by Drawer_Name	29-Oct-2004	SHEET 26 OF 68	

WWW.AliSaler.Com

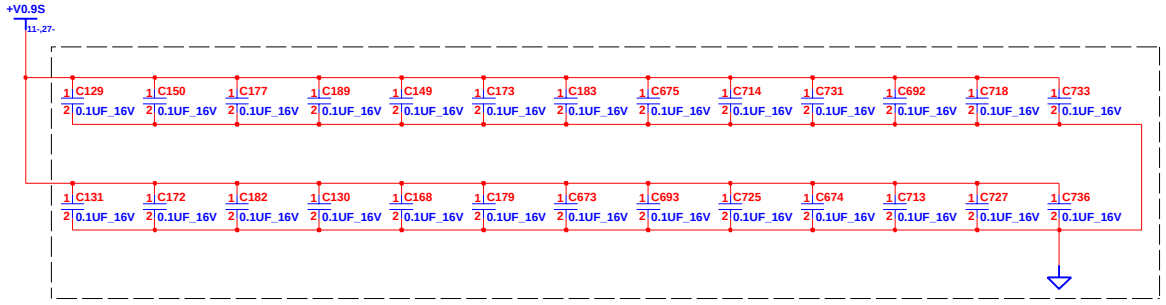

LAYOUT NOTES : PLACE ONE CAP CLOSE TO EVERY 2 PULL UP RESISTOR TERMINATED TO +V0.9S

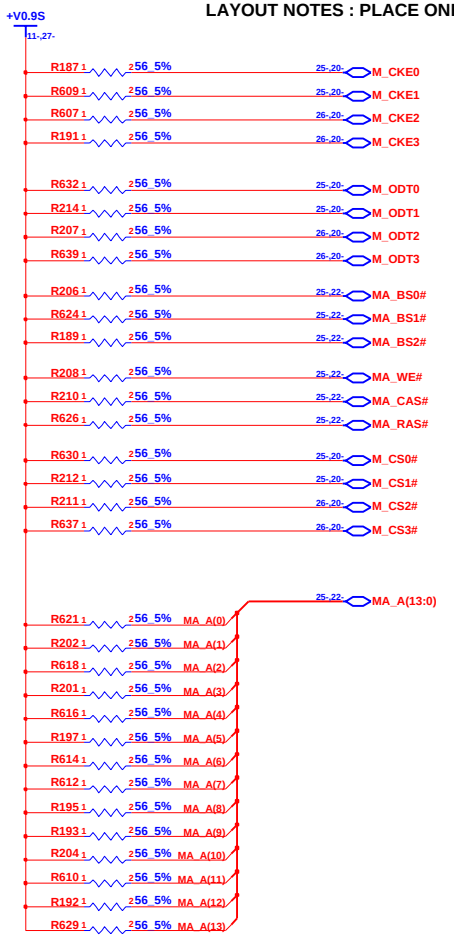

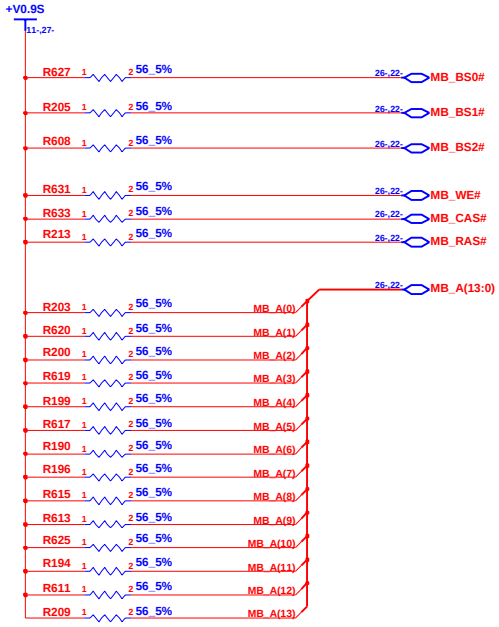

CHANGE by	Drawer_Name	1-Sep-2004	

INVENTEC

TITLE *Title_Name*
DDR2-DAMPING

SIZE	CODE	DOC. NUMBER	REV
A3	CS	*Model_No*	*AX1*

SHEET 27 OF 68

WWW.AliSaler.Com

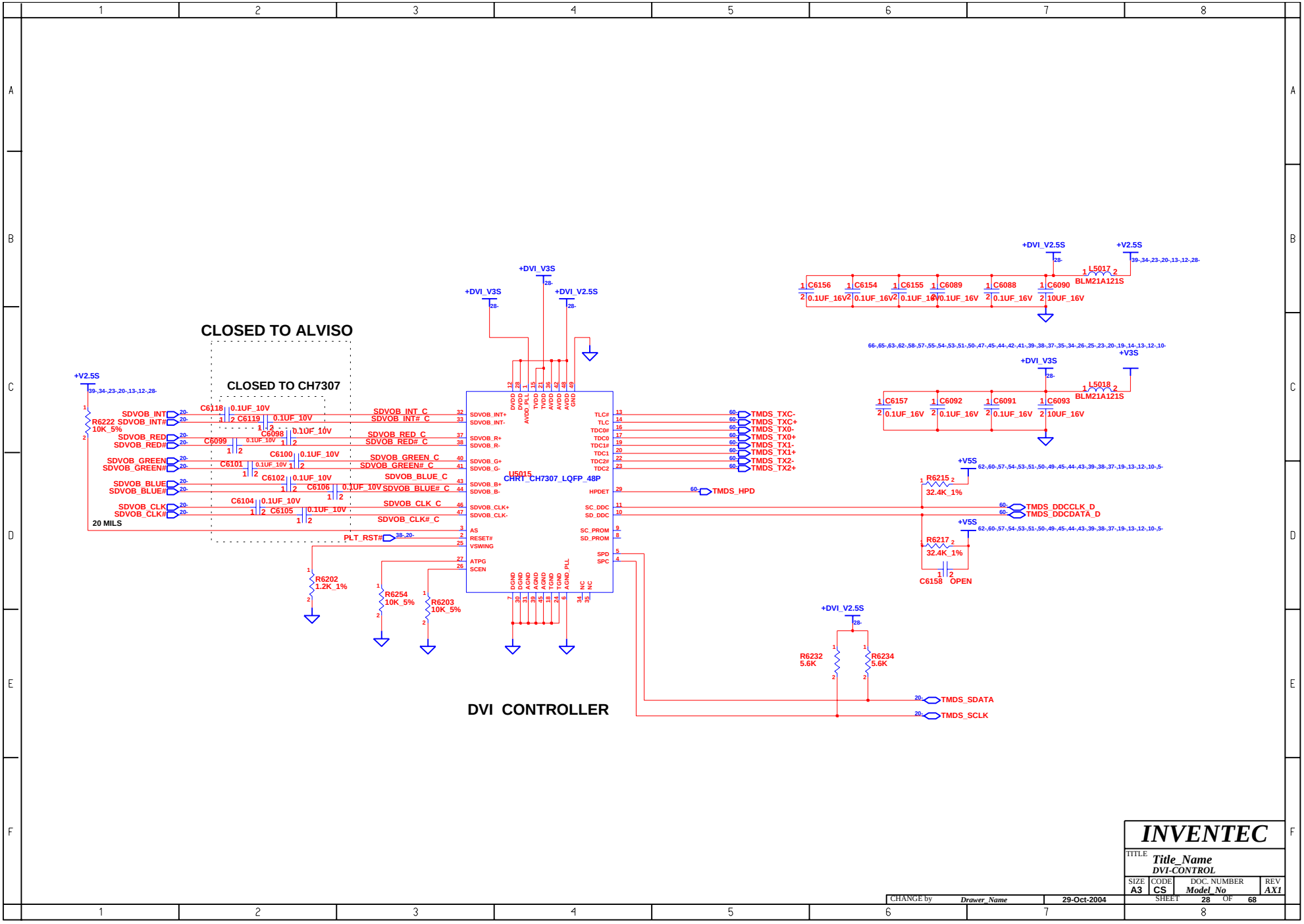

WWW.AliSaler.Com

BLANK

INVENTEC					
TITLE	Title_Name ATI-M24-P-3				
SIZE	CODE	DOC. NUMBER	REV		
A3	CS	Model_No	AX1		
CHANGE by	Drawer_Name	1-Sep-2004	SHEET 29 OF 68		

WWW.AliSaler.Com

BLANK

INVENTEC			
TITLE Title_Name ATI-M24-P-4			
SIZE A3	CODE CS	DOC. NUMBER Model_No	REV AX1
CHANGE by Drawer_Name	1-Sep-2004	SHEET 30 OF 68	

WWW.AliSaler.Com

BLANK

INVENTEC					
TITLE	Title_Name VGA DAMPING RESISTOR				
SIZE	CODE	DOC. NUMBER			REV
A3	CS	Model_No			AX1
CHANGE by	Drawer_Name	27-Sep-2003	SHEET	31 OF 68	

WWW.AliSaler.Com

BLANK

INVENTEC					
TITLE	Title_Name BLANK				
SIZE	CODE	DOC. NUMBER		REV	
A3	CS	Model_No		AX1	
CHANGE by	Drawer_Name	1-Sep-2004	SHEET	32	OF 68

WWW.AliSaler.Com

BLANK

INVENTEC			
TITLE Title_Name VIDEO RAM-2			
SIZE A3	CODE CS	DOC. NUMBER Model_No	REV AX1
CHANGE by Drawer_Name	1-Sep-2004	SHEET 33 OF 68	

WWW.AliSaler.Com

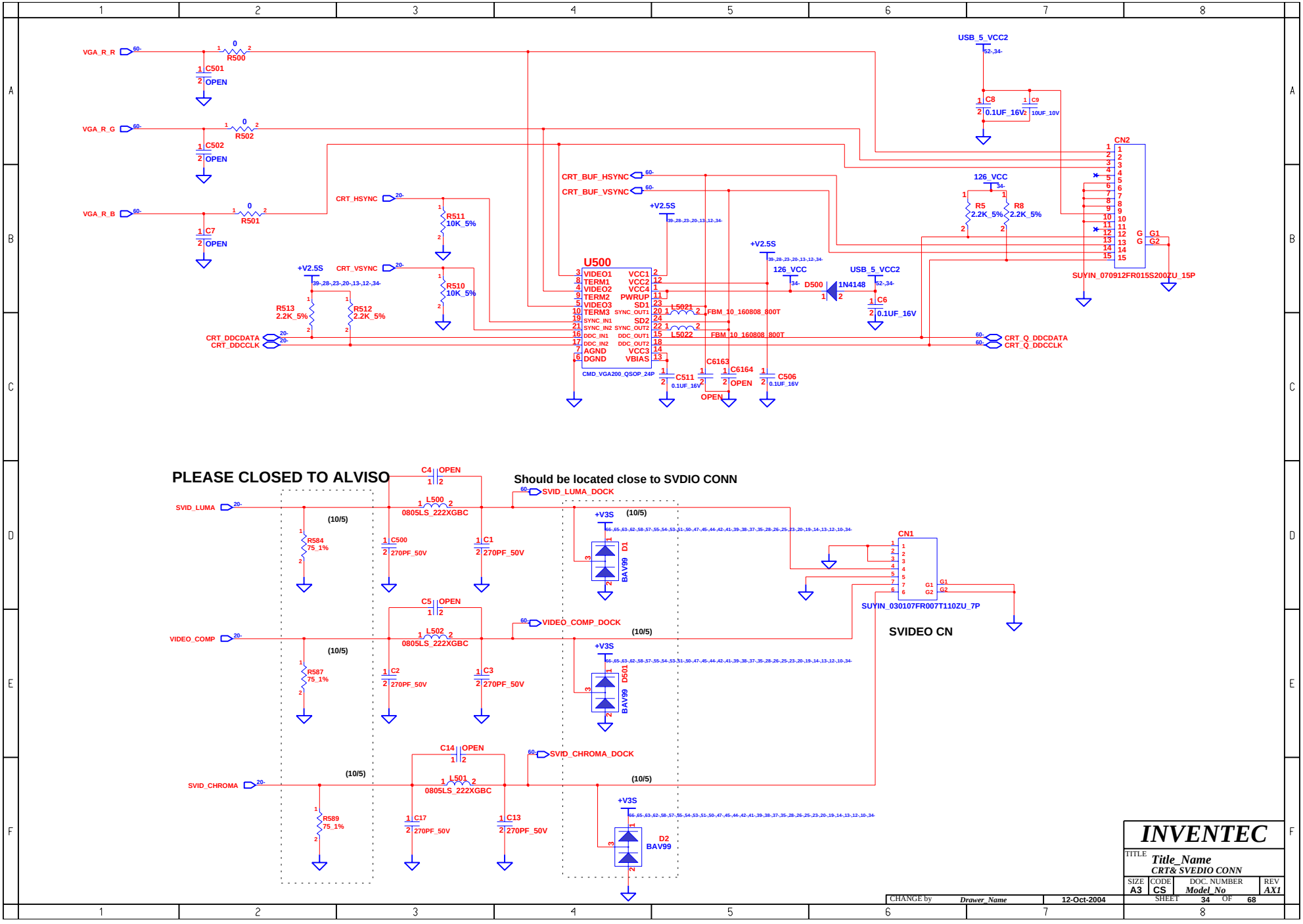

WWW.AliSaler.Com

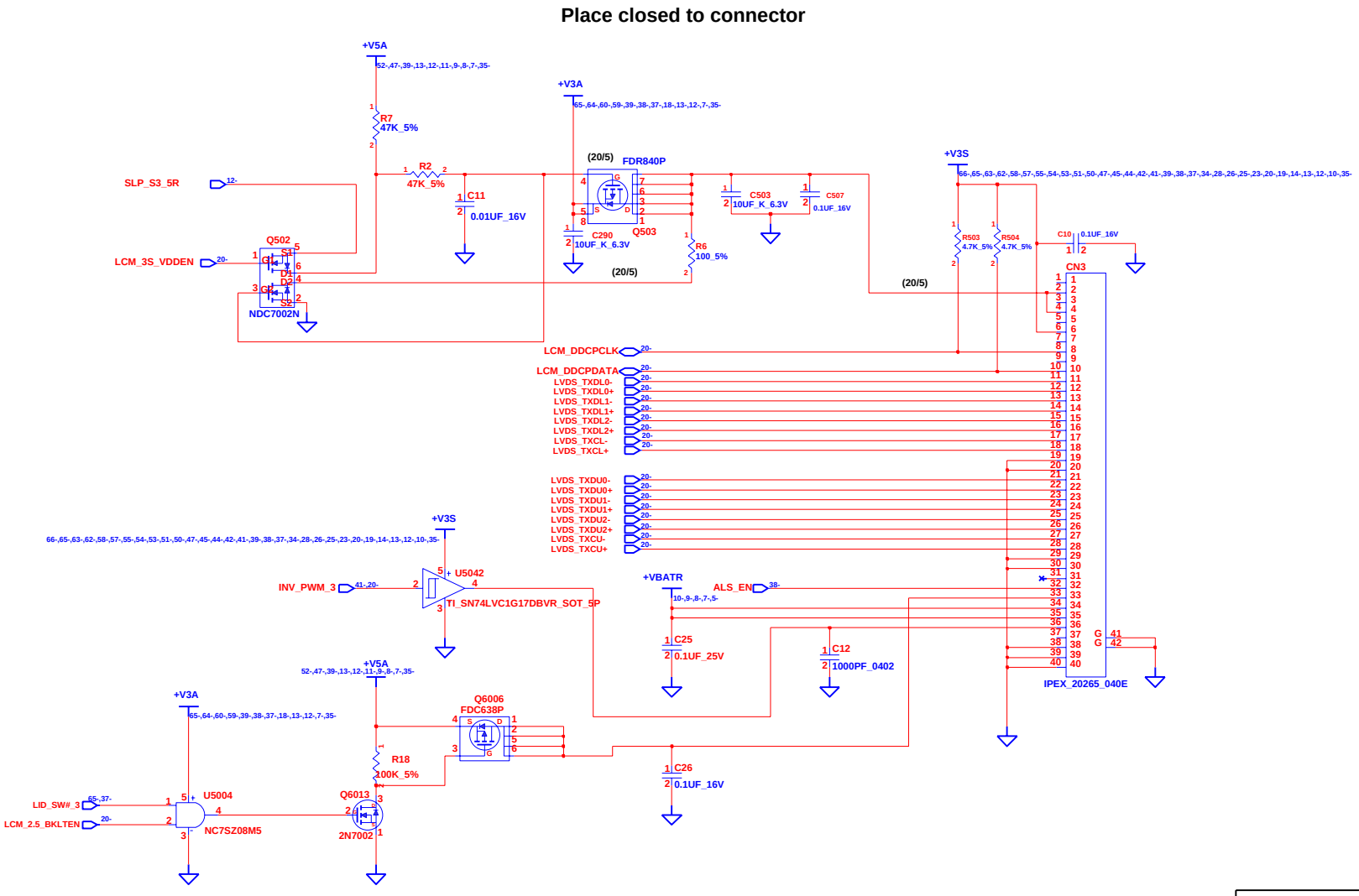

WWW.AliSaler.Com

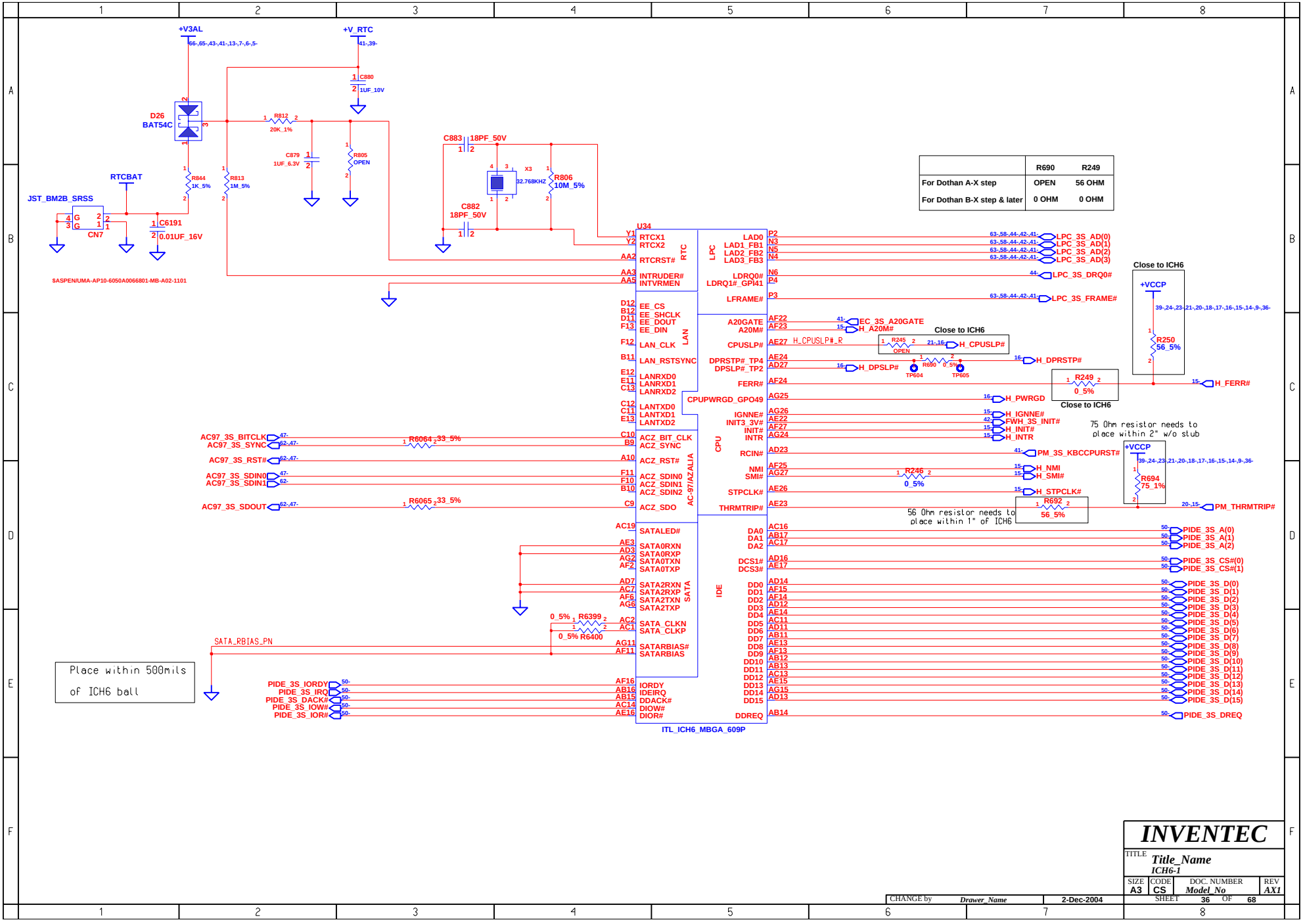

	R690	R249
For Dothan A-X step	OPEN	56 OHM
For Dothan B-X step & later	0 OHM	0 OHM

WWW.AliSaler.Com

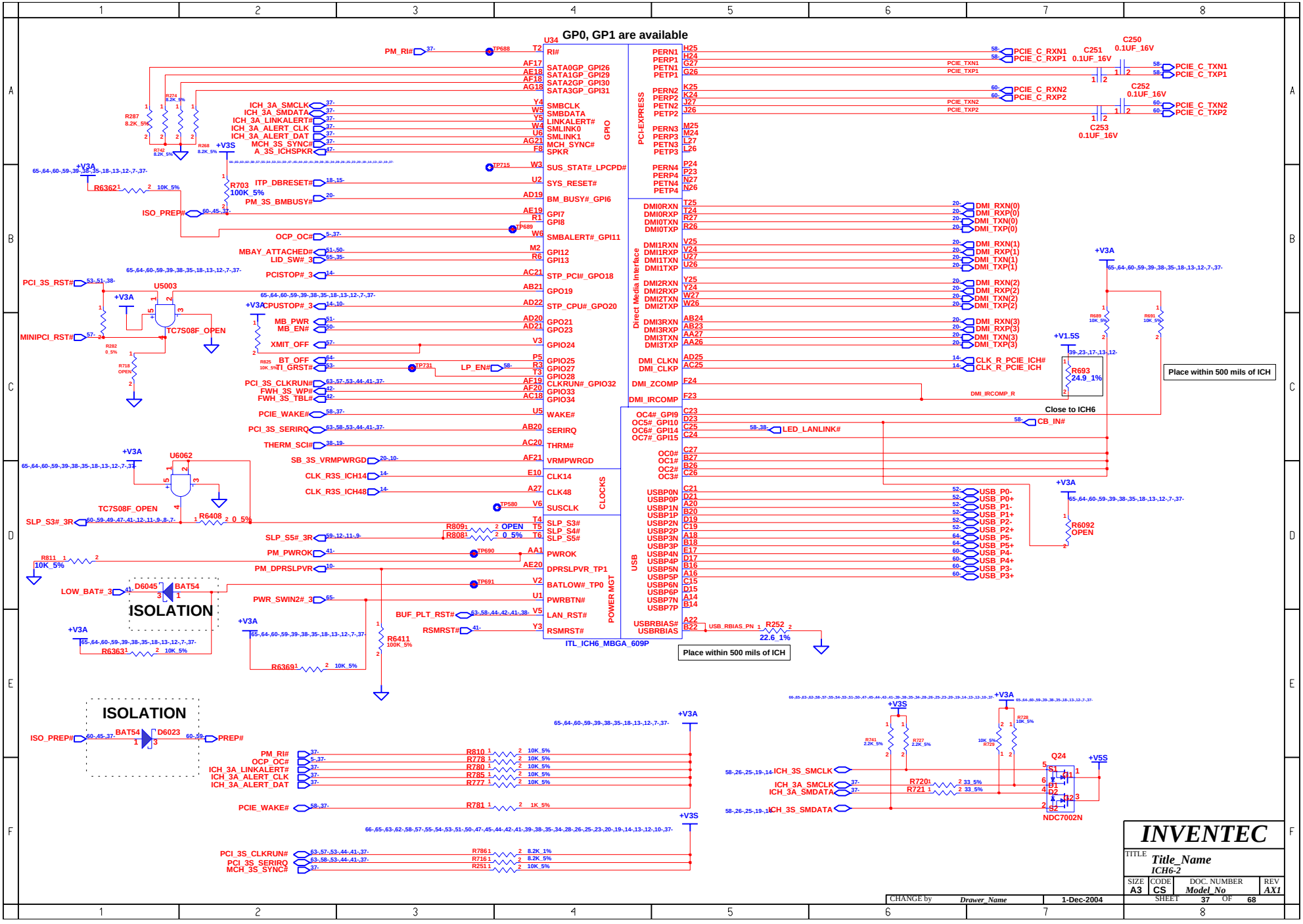

WWW.AliSaler.Com

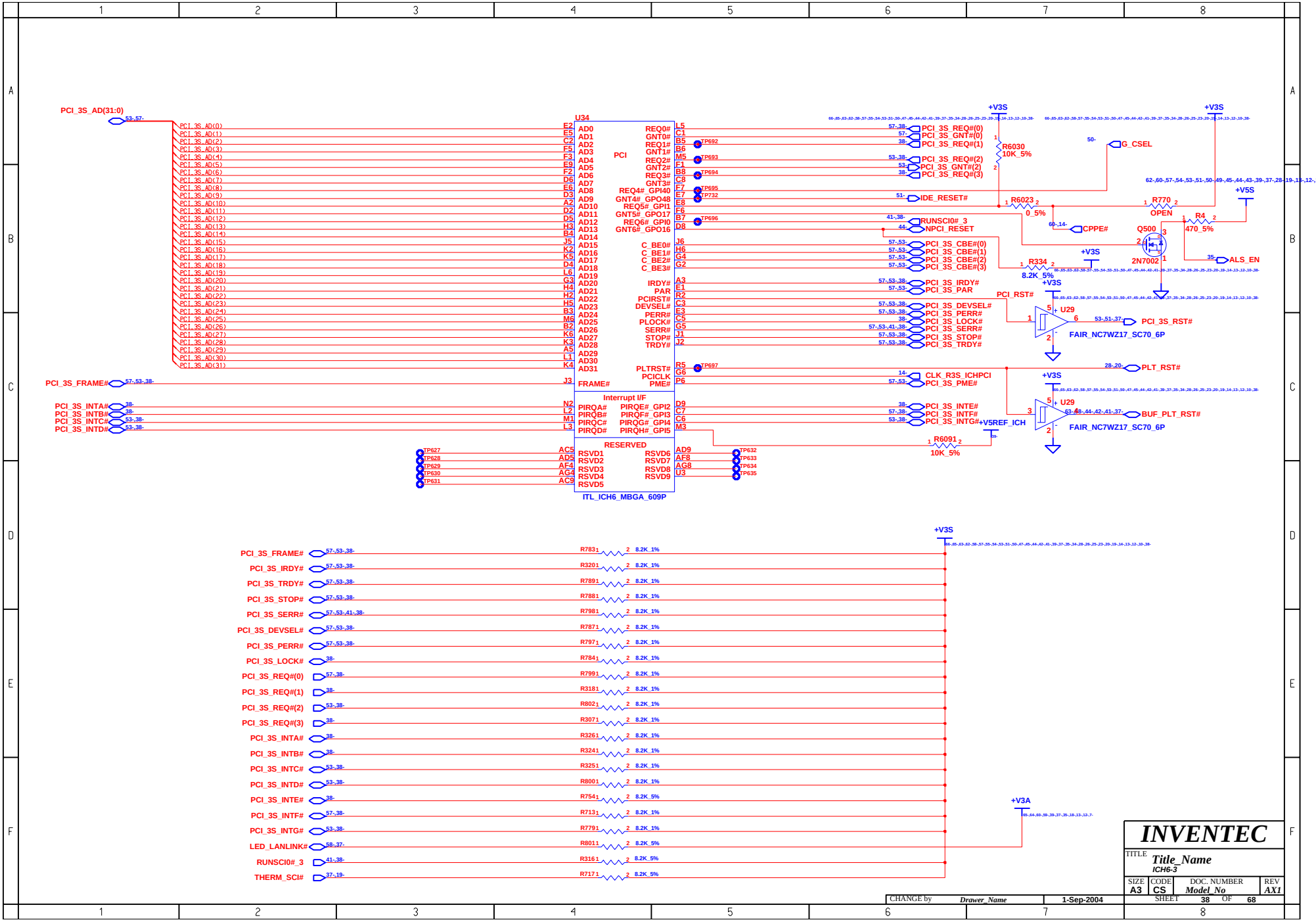

WWW.AliSaler.Com

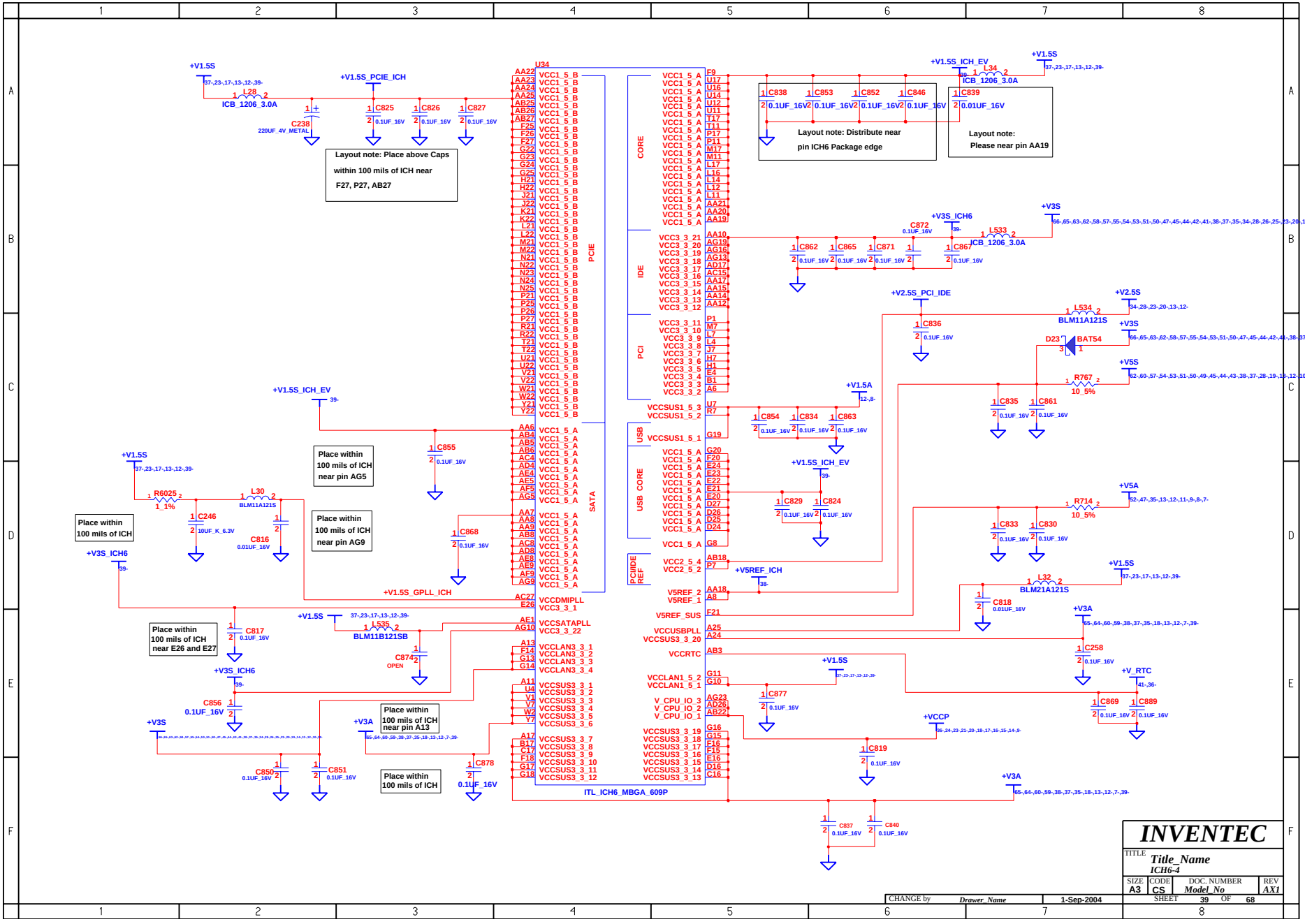

WWW.AliSaler.Com

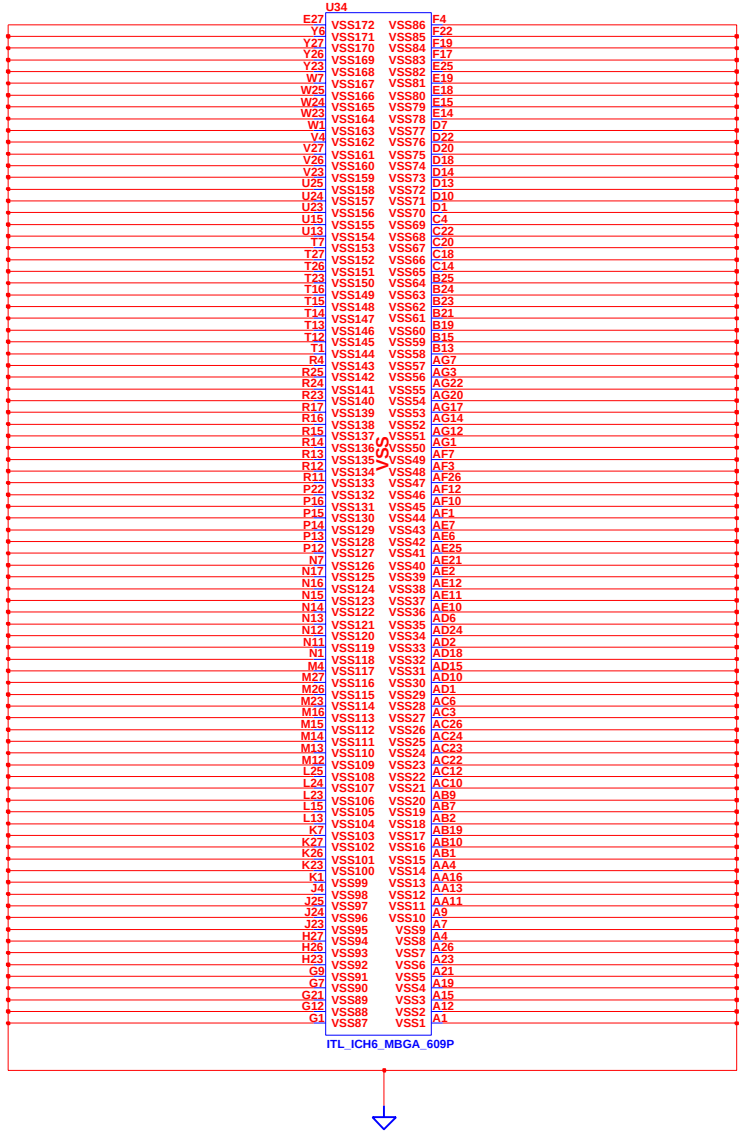

CHANGE by	Drawer_Name	1-Sep-2004	

INVENTEC

TITLE *Title_Name*
ICH6-5

SIZE	CODE	DOC. NUMBER	REV
A3	CS	Model_No	AX1

SHEET 40 OF 68

WWW.AliSaler.Com

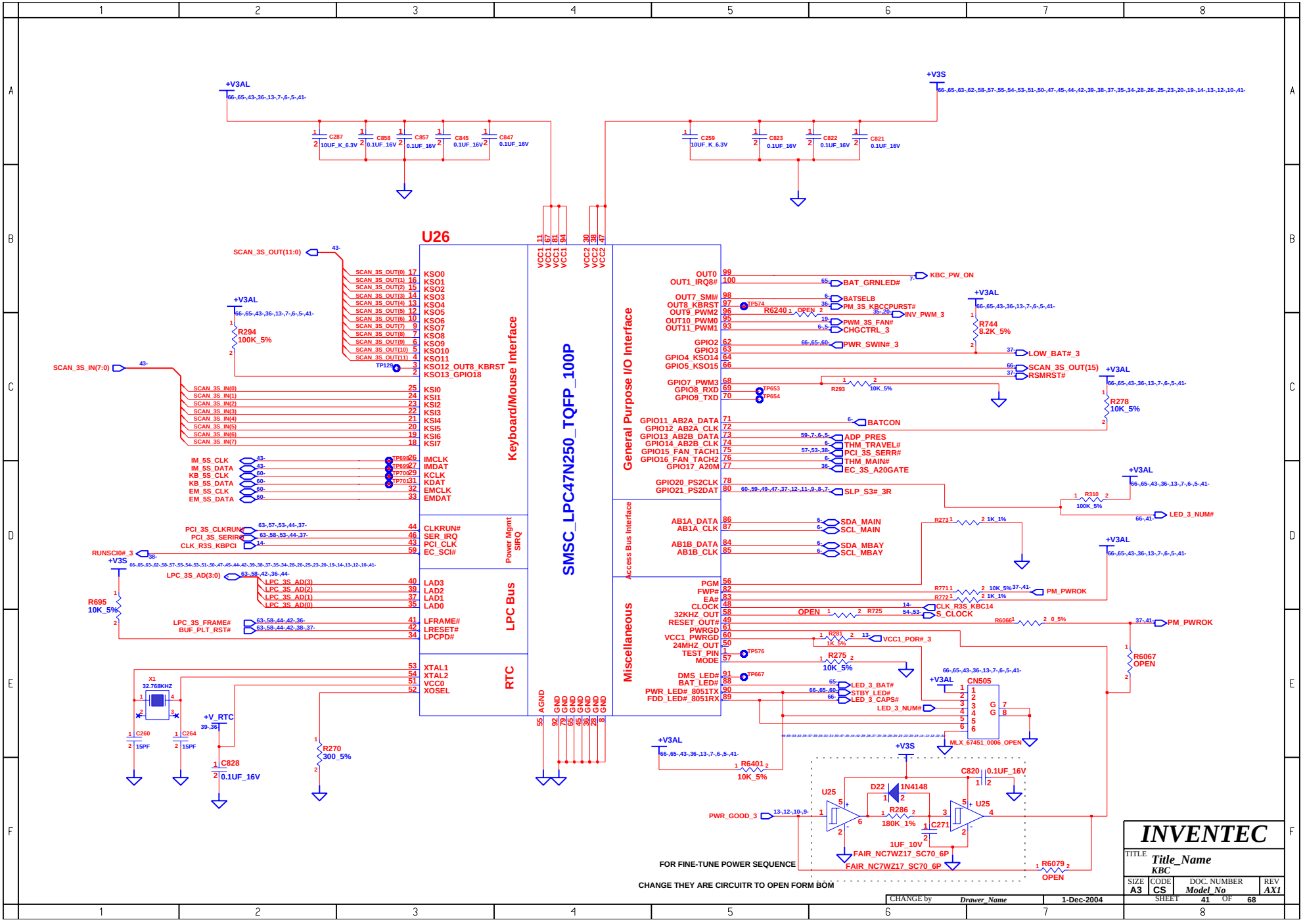

WWW.AliSaler.Com

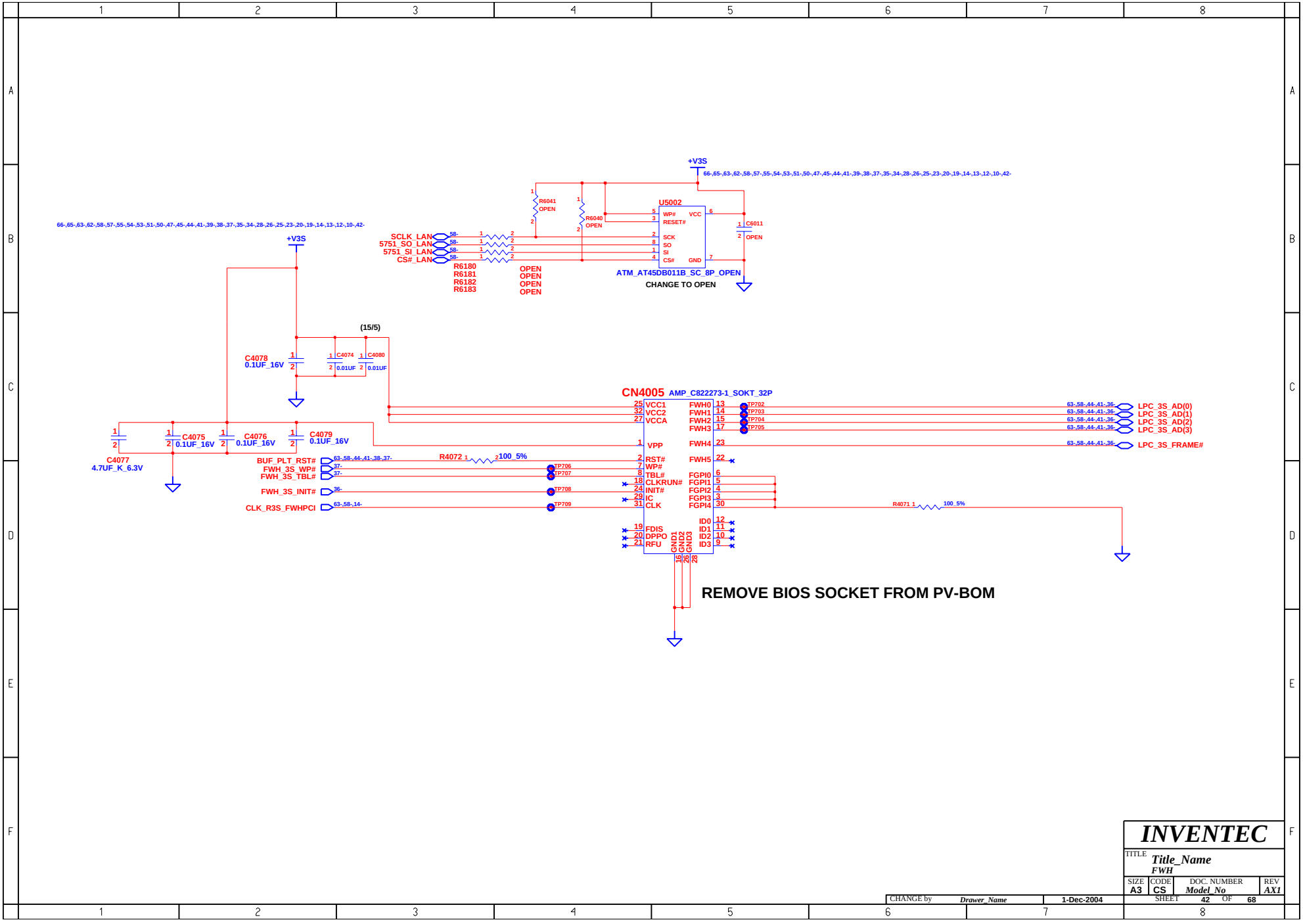

INVENTEC			
TITLE Title_Name FWH			
SIZE A3	CODE CS	DOC. NUMBER Model_No	REV AX1
CHANGE by Drawer_Name	1-Dec-2004	SHEET 42 OF 68	

WWW.AliSaler.Com

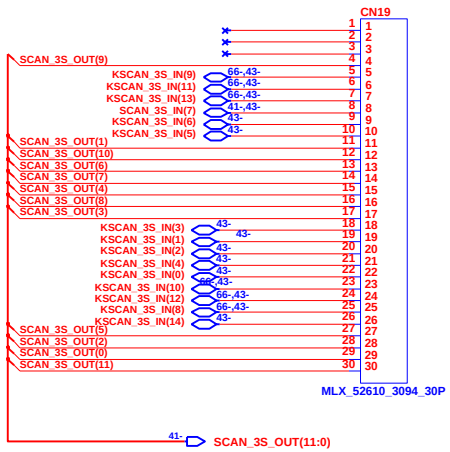

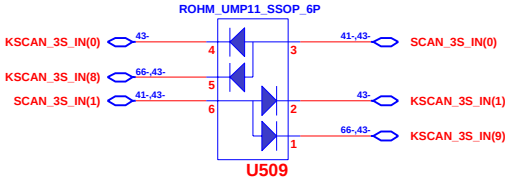

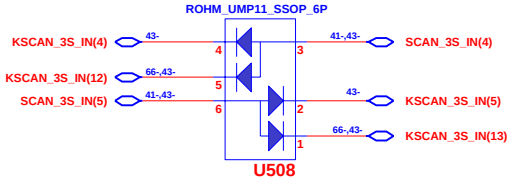

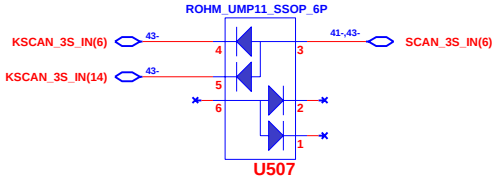

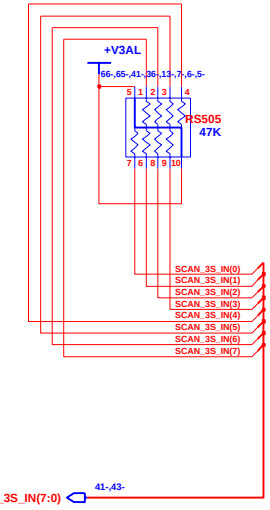

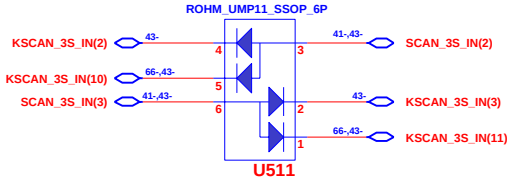

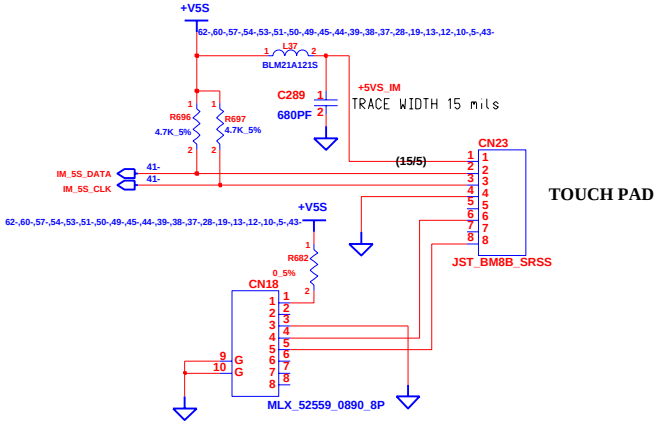

INVENTEC			
TITLE Title_Name INT.KBC/POINT DEVICES			
SIZE A3	CODE CS	DOC. NUMBER Model_No	REV AX1
CHANGE by Drawer_Name	1-Dec-2004	SHEET 43 OF 68	

WWW.AliSaler.Com

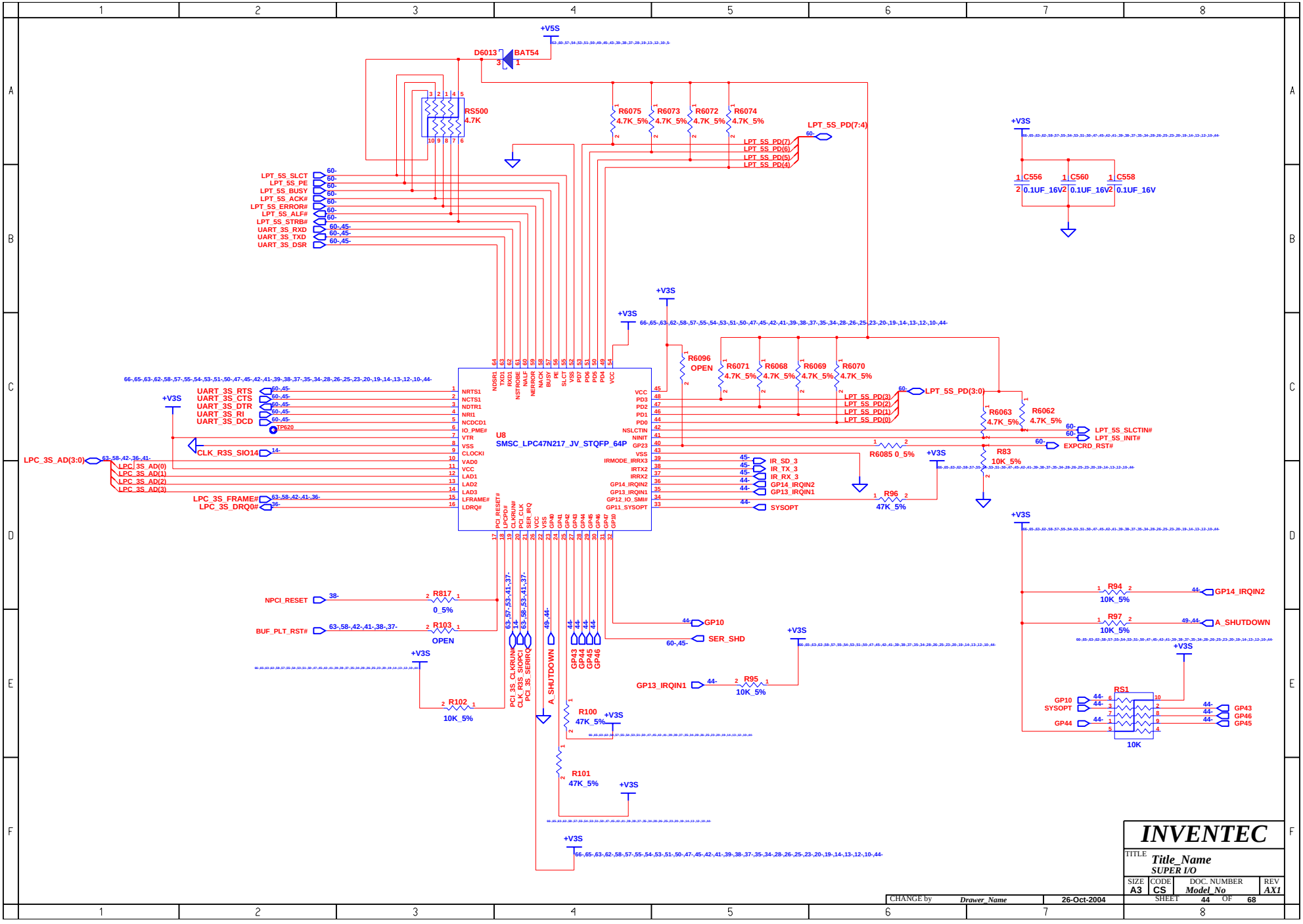

WWW.AliSaler.Com

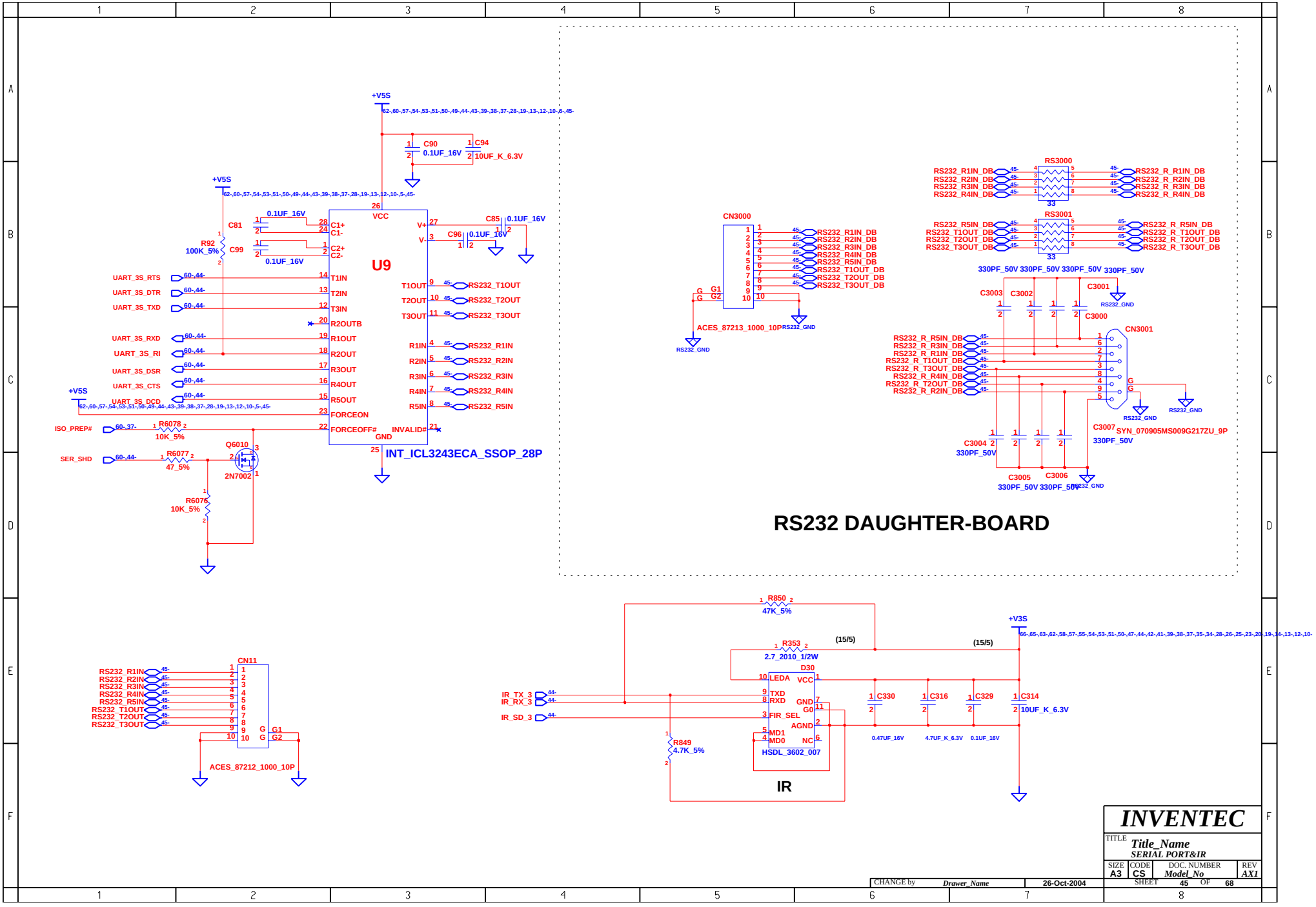

WWW.AliSaler.Com

BLANK

CHANGE by	Drawer_Name	1-Sep-2004			

INVENTEC

TITLE *Title_Name*
PARALLER PORT

SIZE	CODE	DOC. NUMBER	REV
A3	CS	*Model_No*	*AX1*

SHEET 46 OF 68

WWW.AliSaler.Com

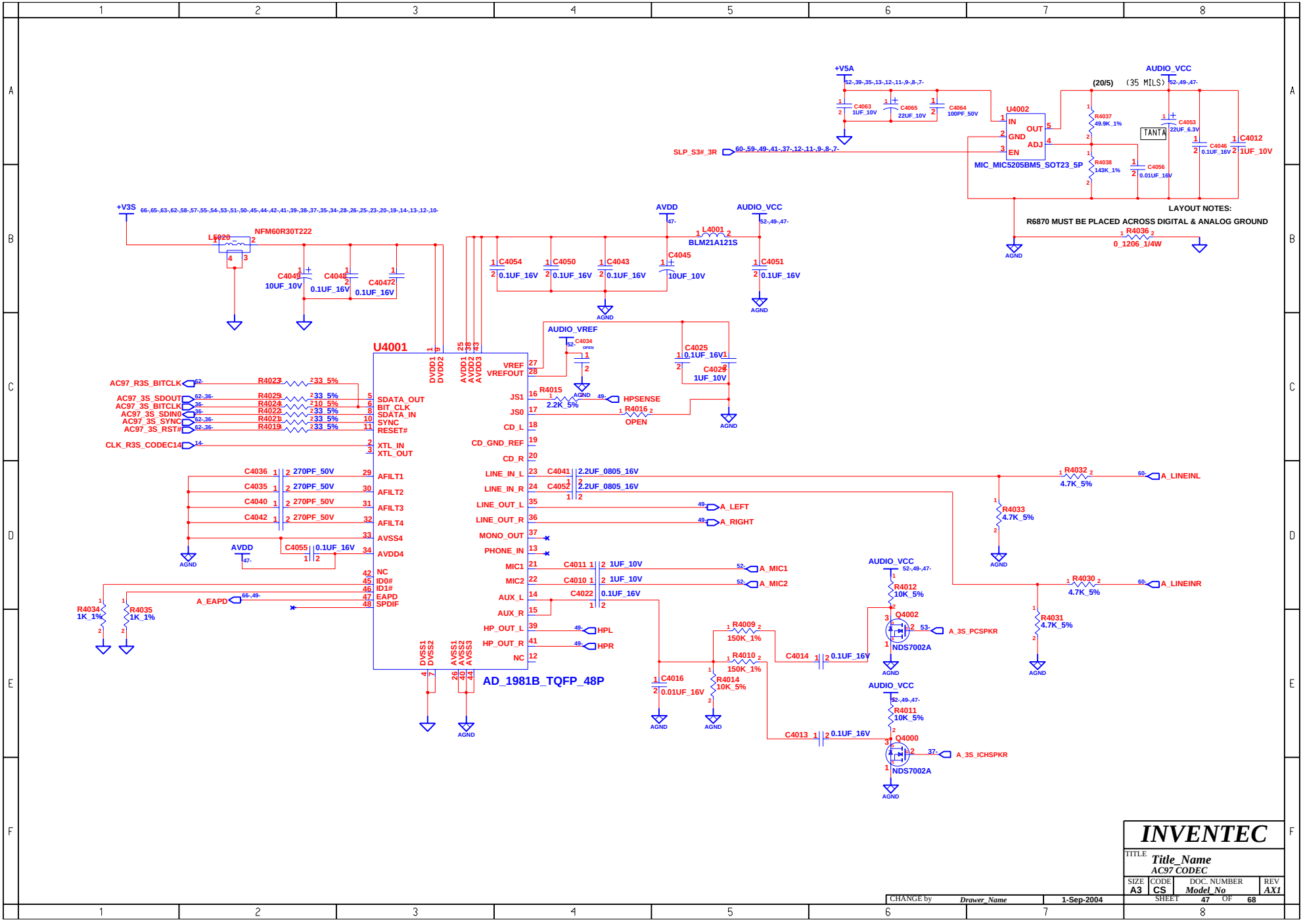

WWW.AliSaler.Com

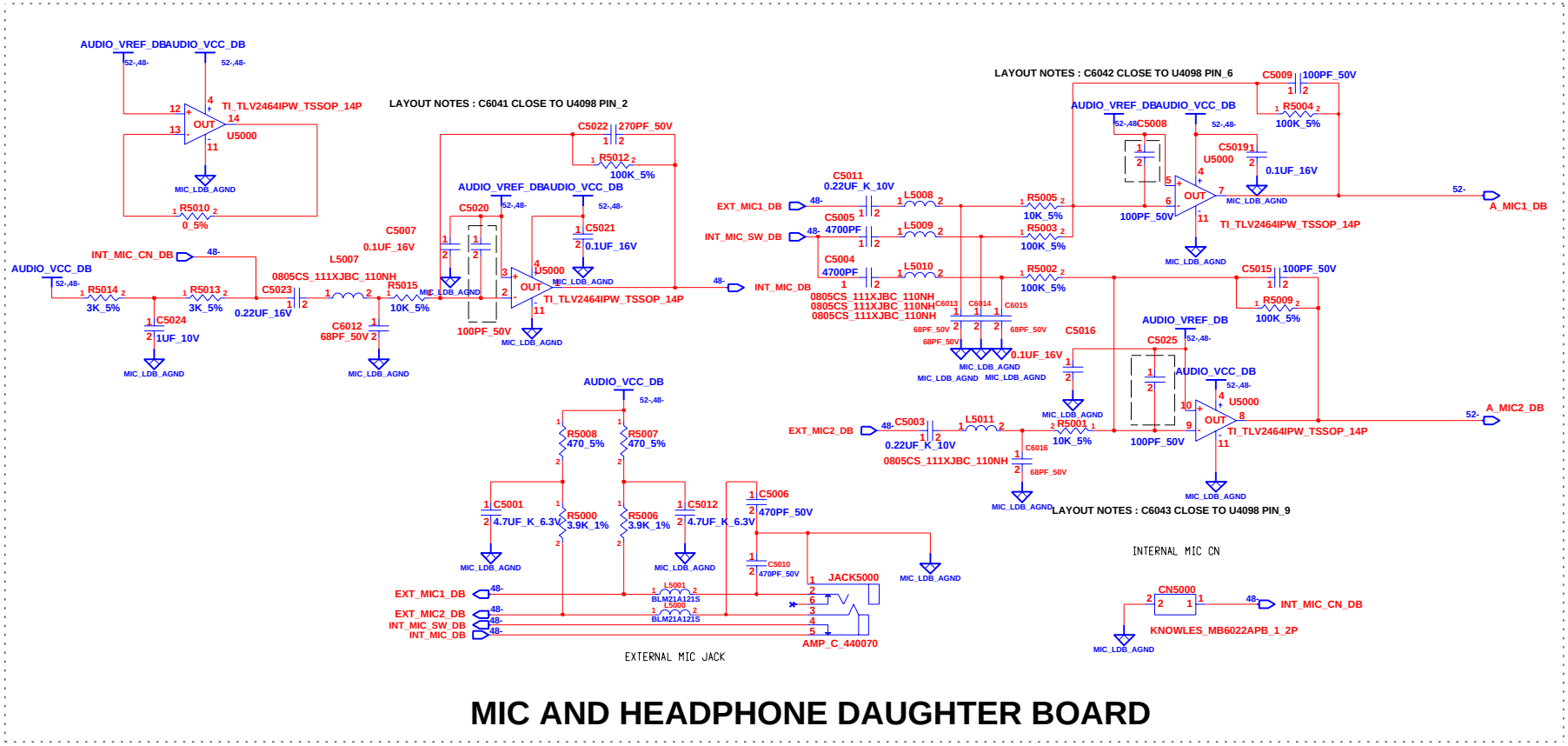

MIC AND HEADPHONE DAUGHTER BOARD

INVENTEC			
TITLE: ASPEN-UMA EQ&MIC JACK			
SIZE: A3	CODE: CS	DOC. NUMBER: Model_No	REV: AX2
CHANGE by: Drawer_Name	1-Dec-2004	SHEET 48 OF 68	

WWW.AliSaler.Com

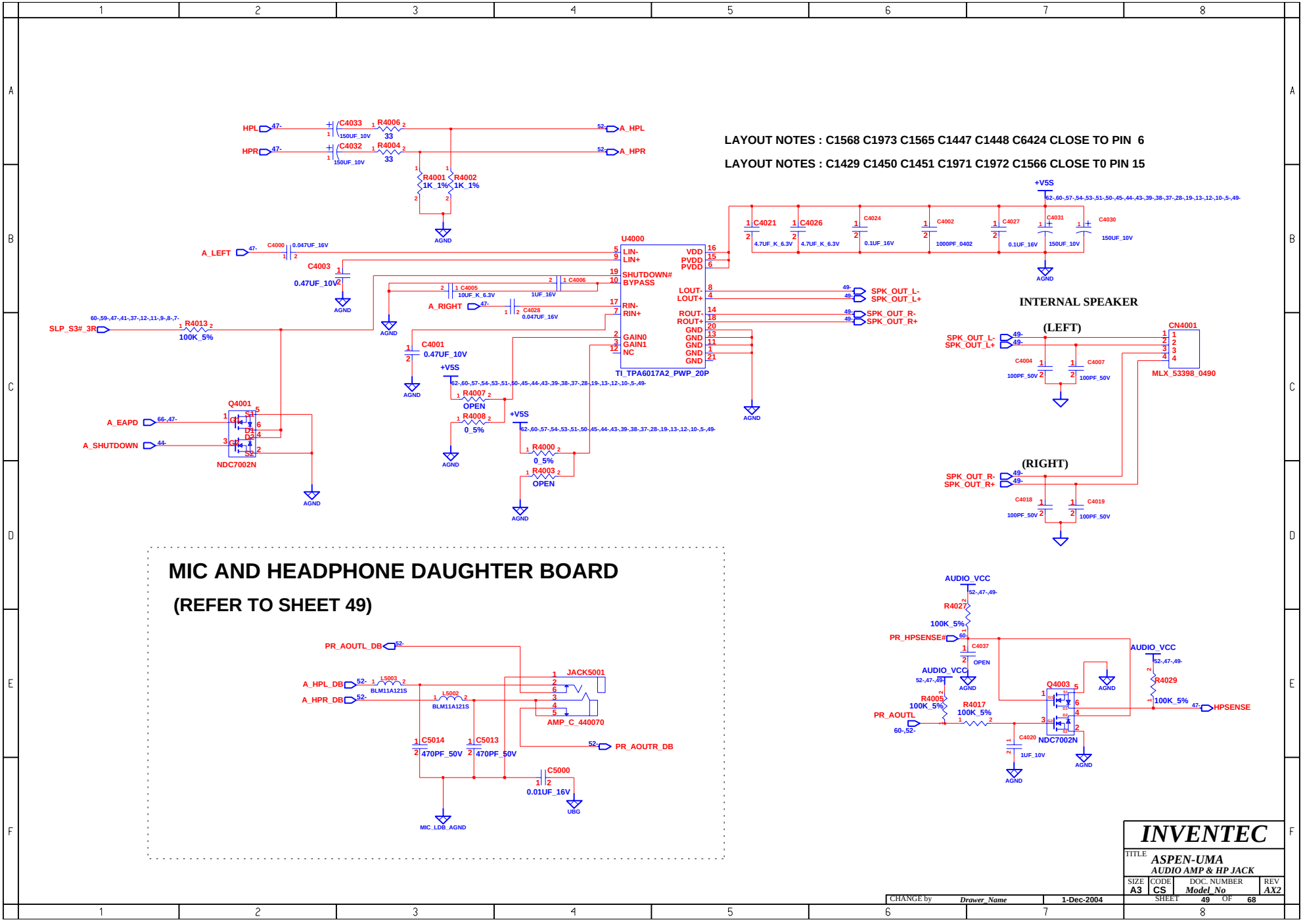

WWW.AliSaler.Com

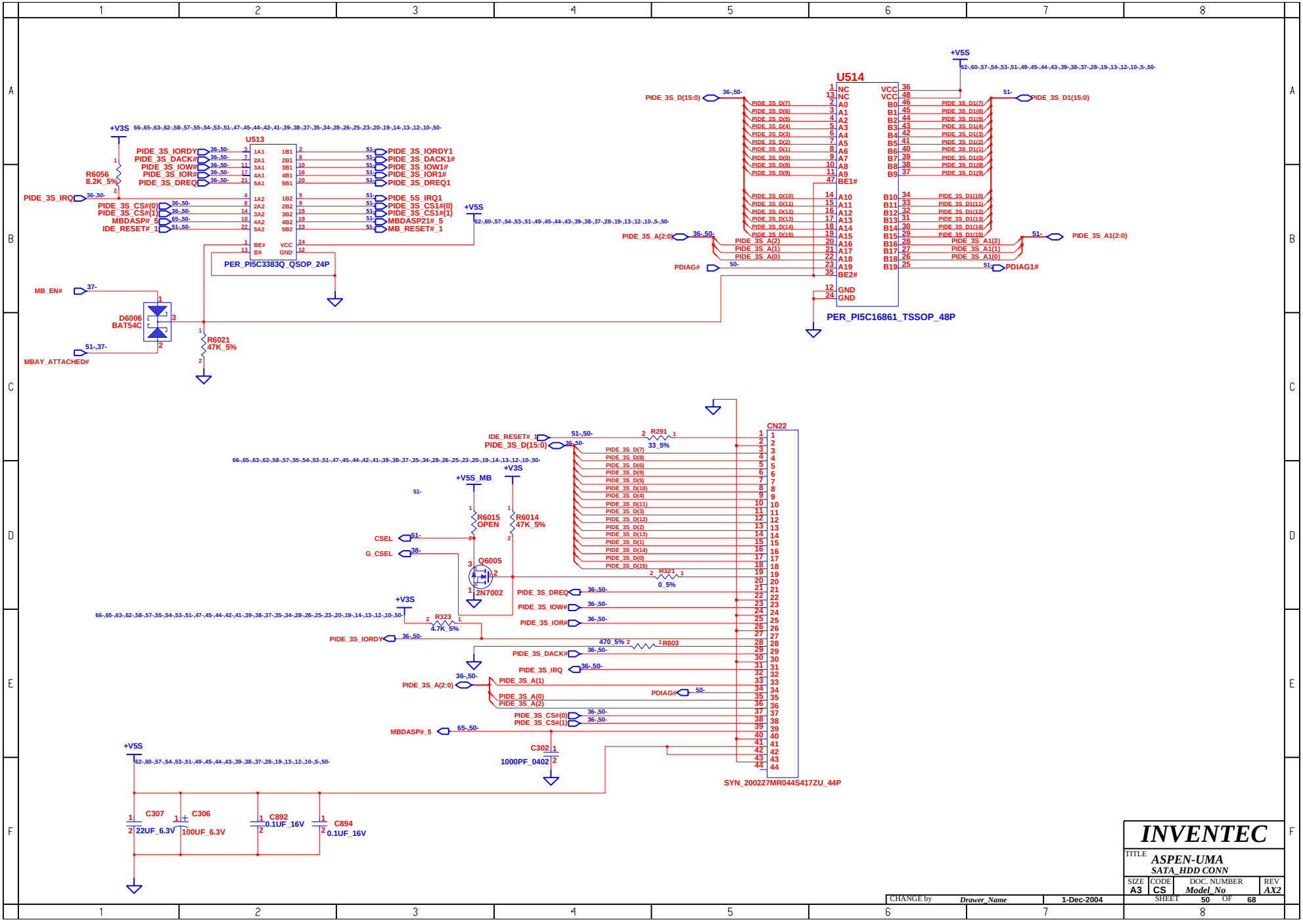

WWW.AliSaler.Com

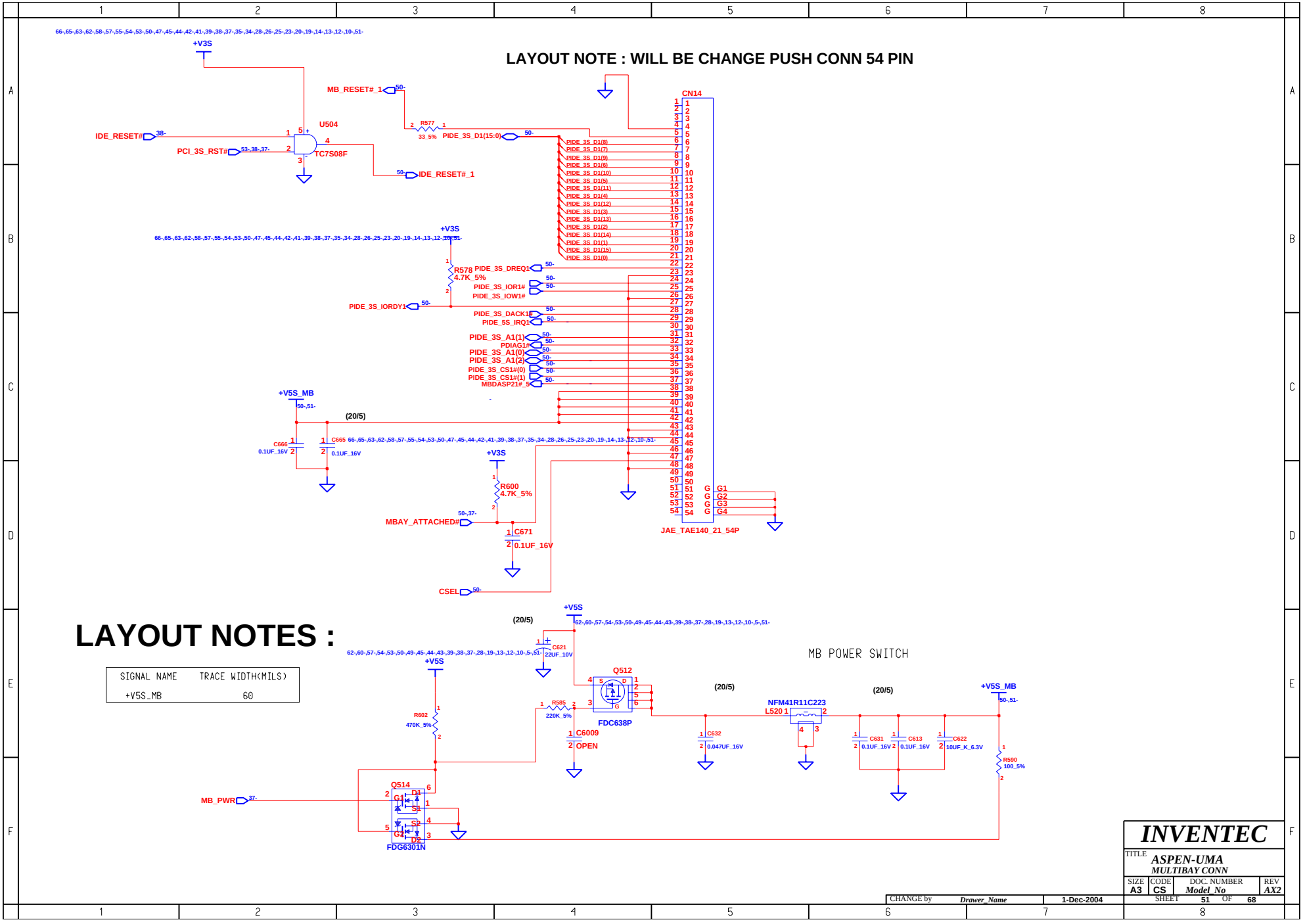

WWW.AliSaler.Com

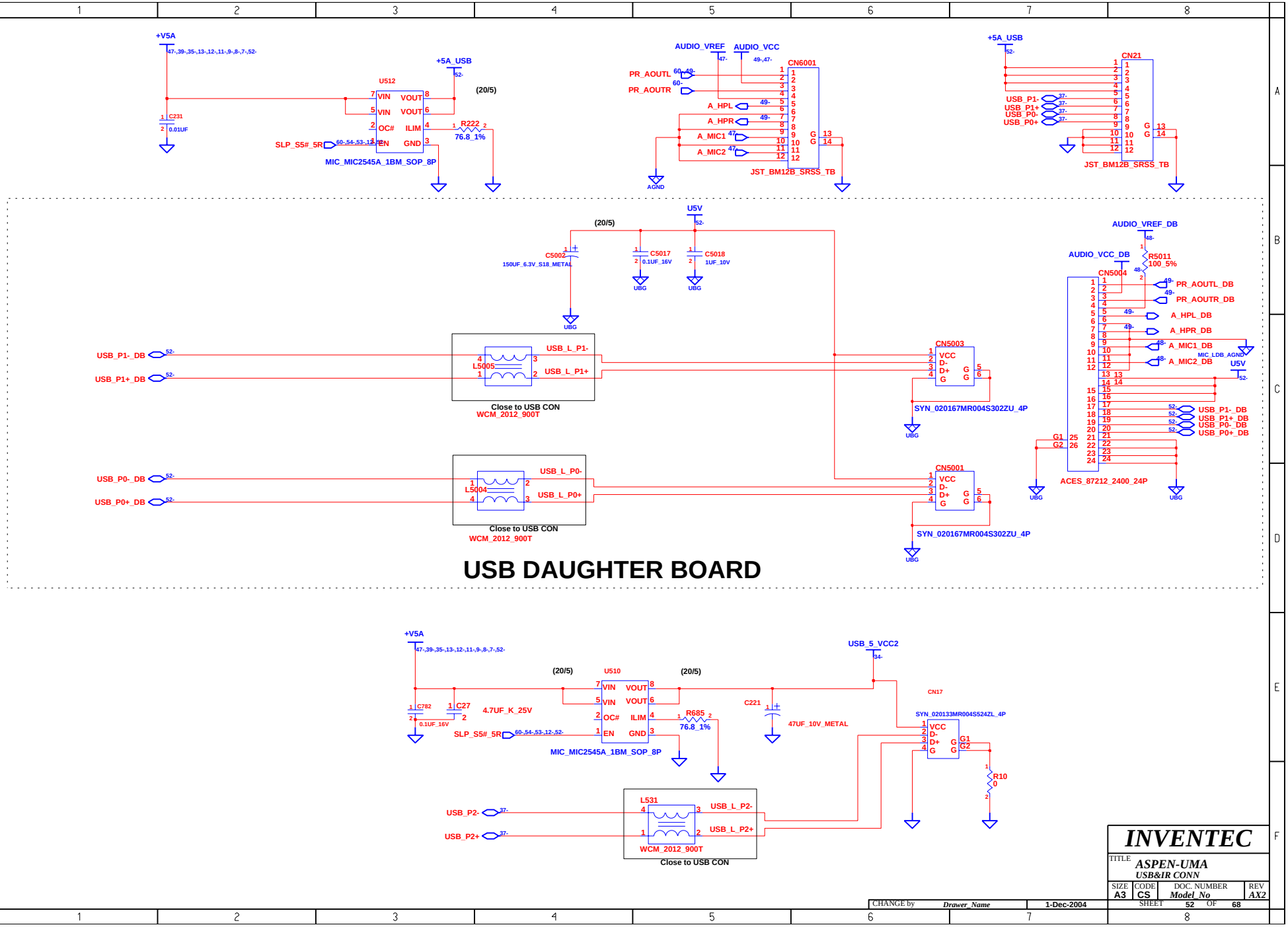

WWW.AliSaler.Com

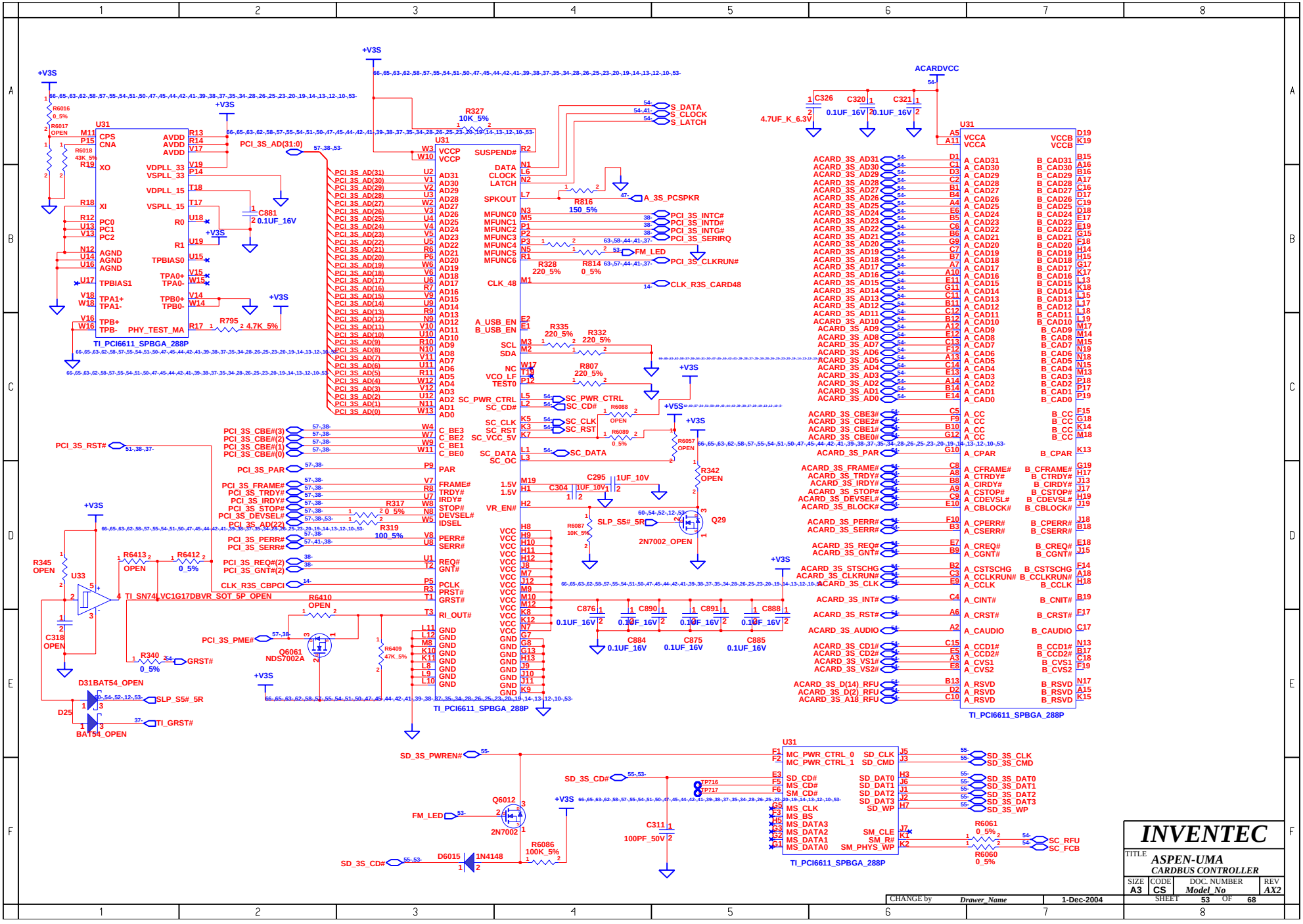

WWW.AliSaler.Com

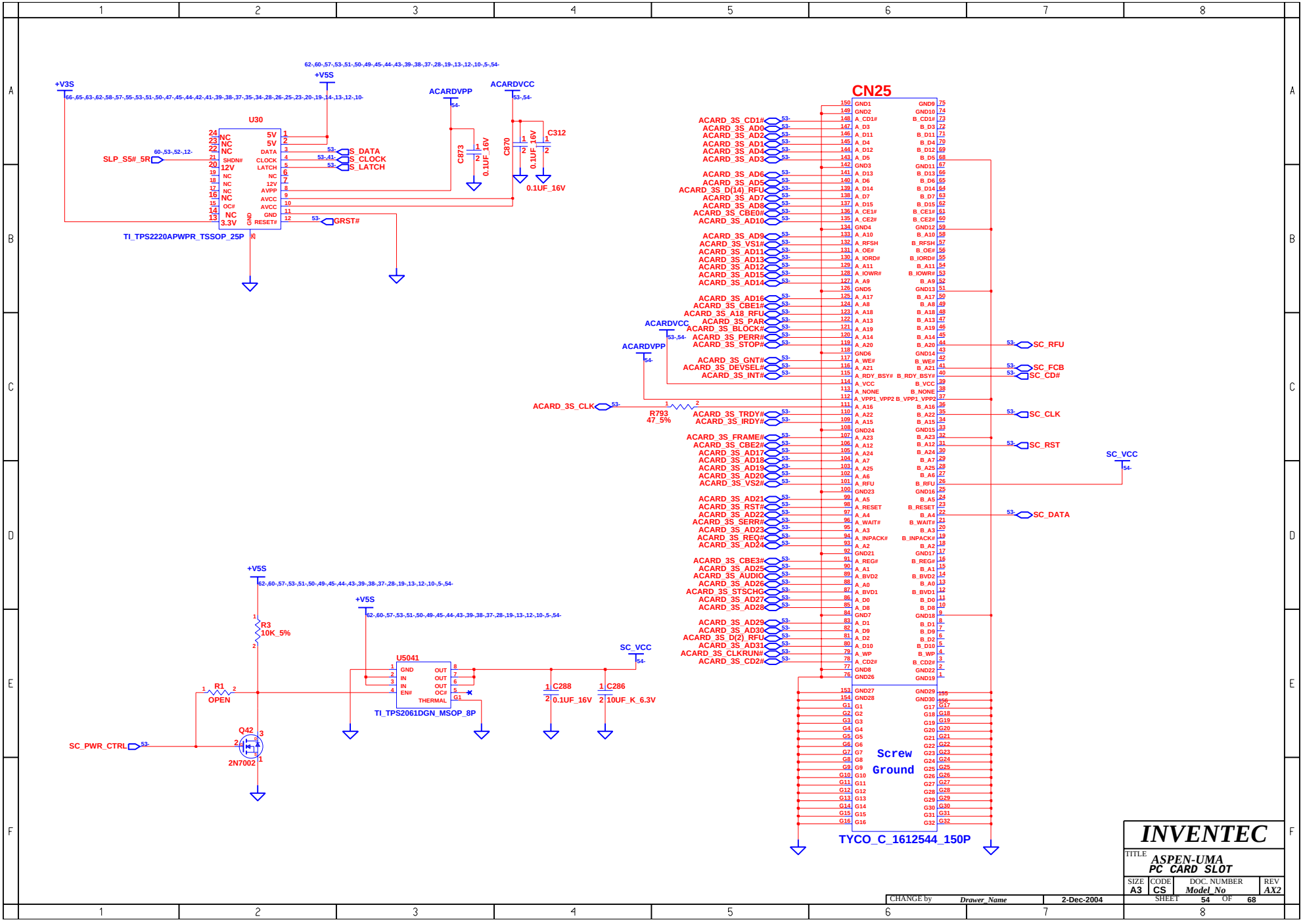

WWW.AliSaler.Com

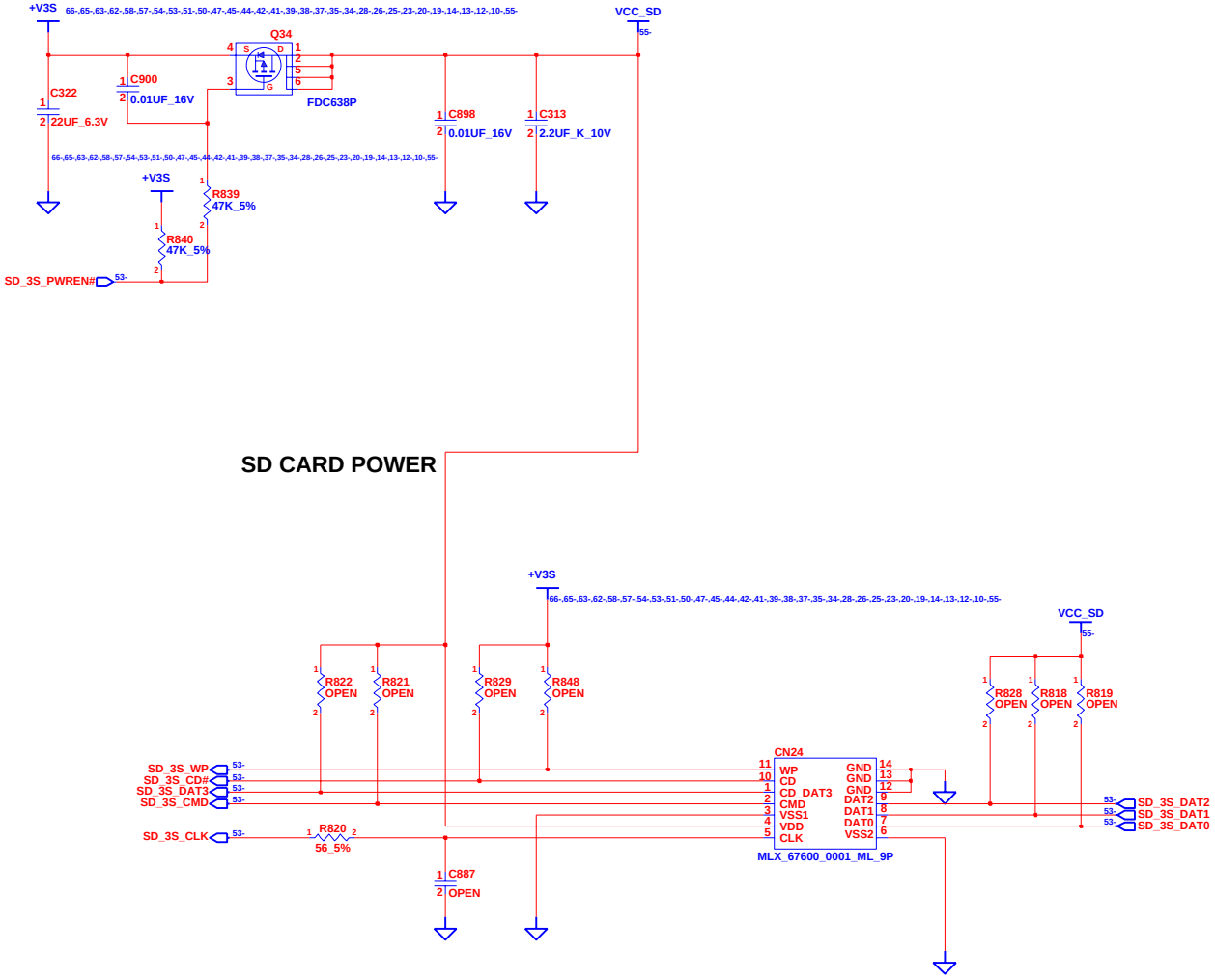

INVENTEC			
TITLE ASPEN-UMA SD CARD CONN			
SIZE A3	CODE CS	DOC. NUMBER Model_No	REV AX2
CHANGE by Drawer_Name	1-Dec-2004	SHEET 55 OF 68	

WWW.AliSaler.Com

BLANK

INVENTEC					
TITLE ASPEN-UMA DAUGHTER BOARD CNN					
SIZE A3	CODE CS	DOC. NUMBER Model_No			REV AX2
CHANGE by Drawer_Name		30-Aug-2004	SHEET 56 OF 68		

WWW.AliSaler.Com

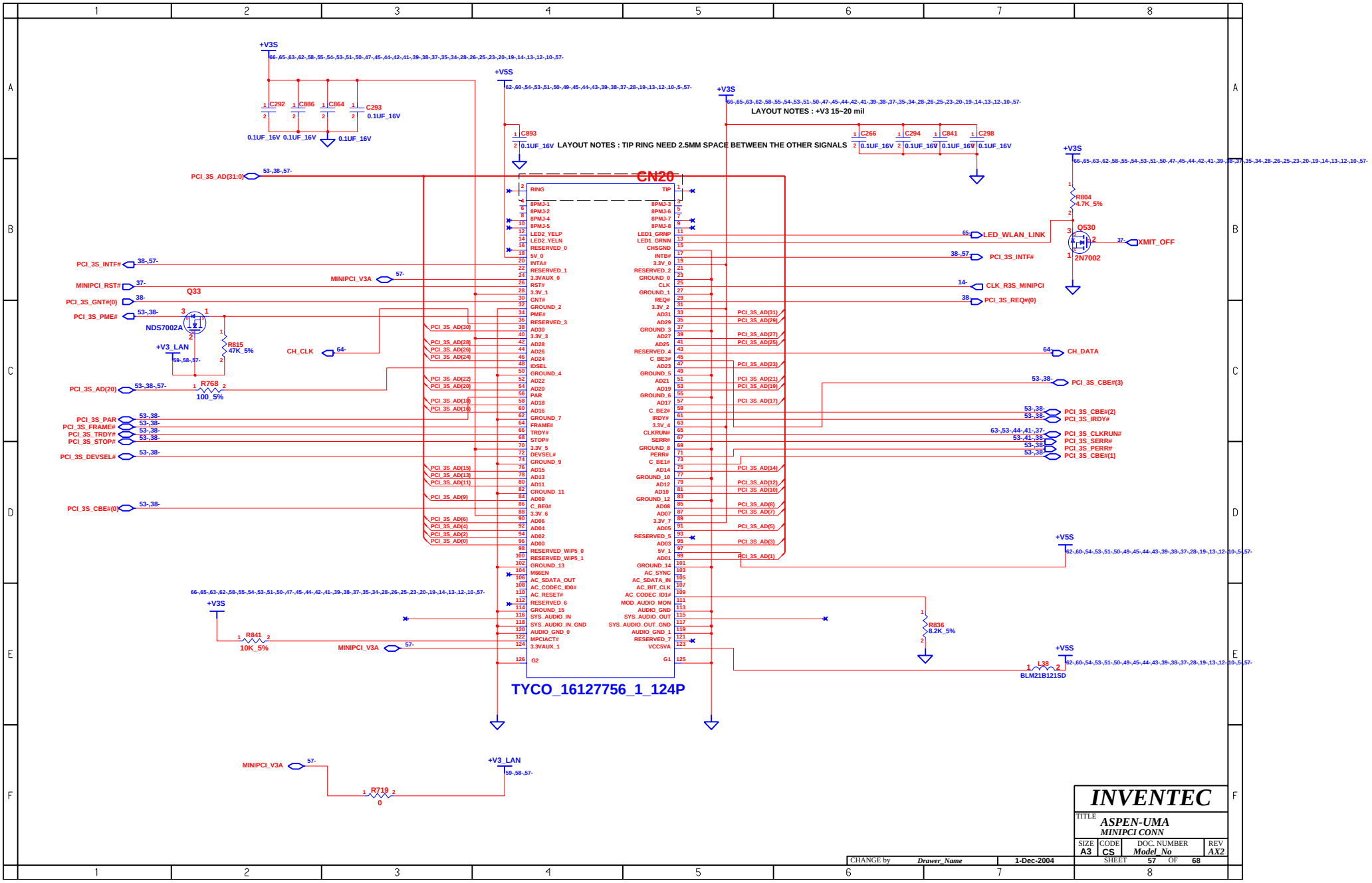

CHANGE by	Drawer_Name	1-Dec-2004	

INVENTEC

TITLE: ASPEN-UMA
MINIPCI CONN

SIZE	CODE	DOC. NUMBER	REV
A3	CS	Model_No	AX2

SHEET 57 OF 68

WWW.AliSaler.Com

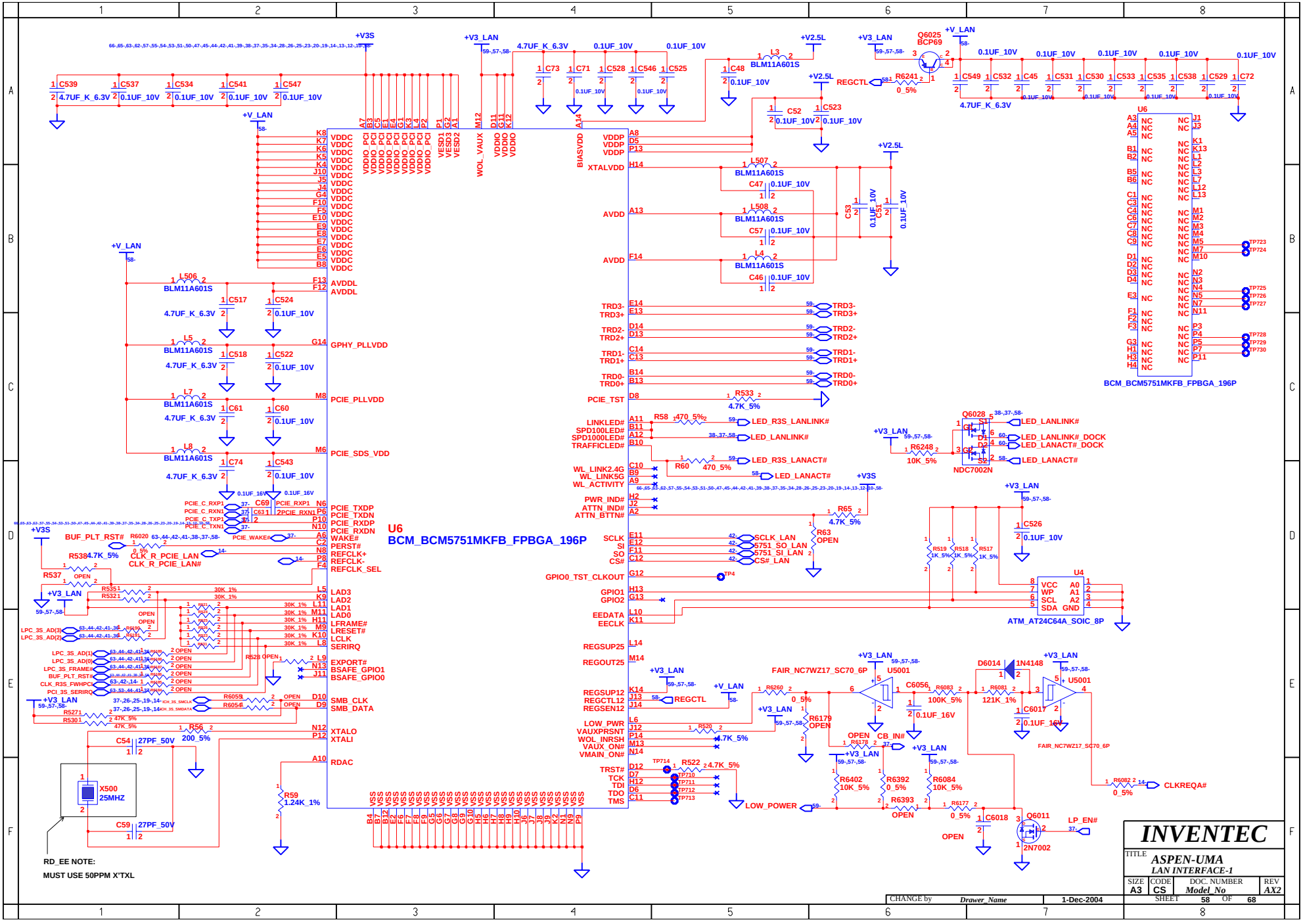

WWW.AliSaler.Com

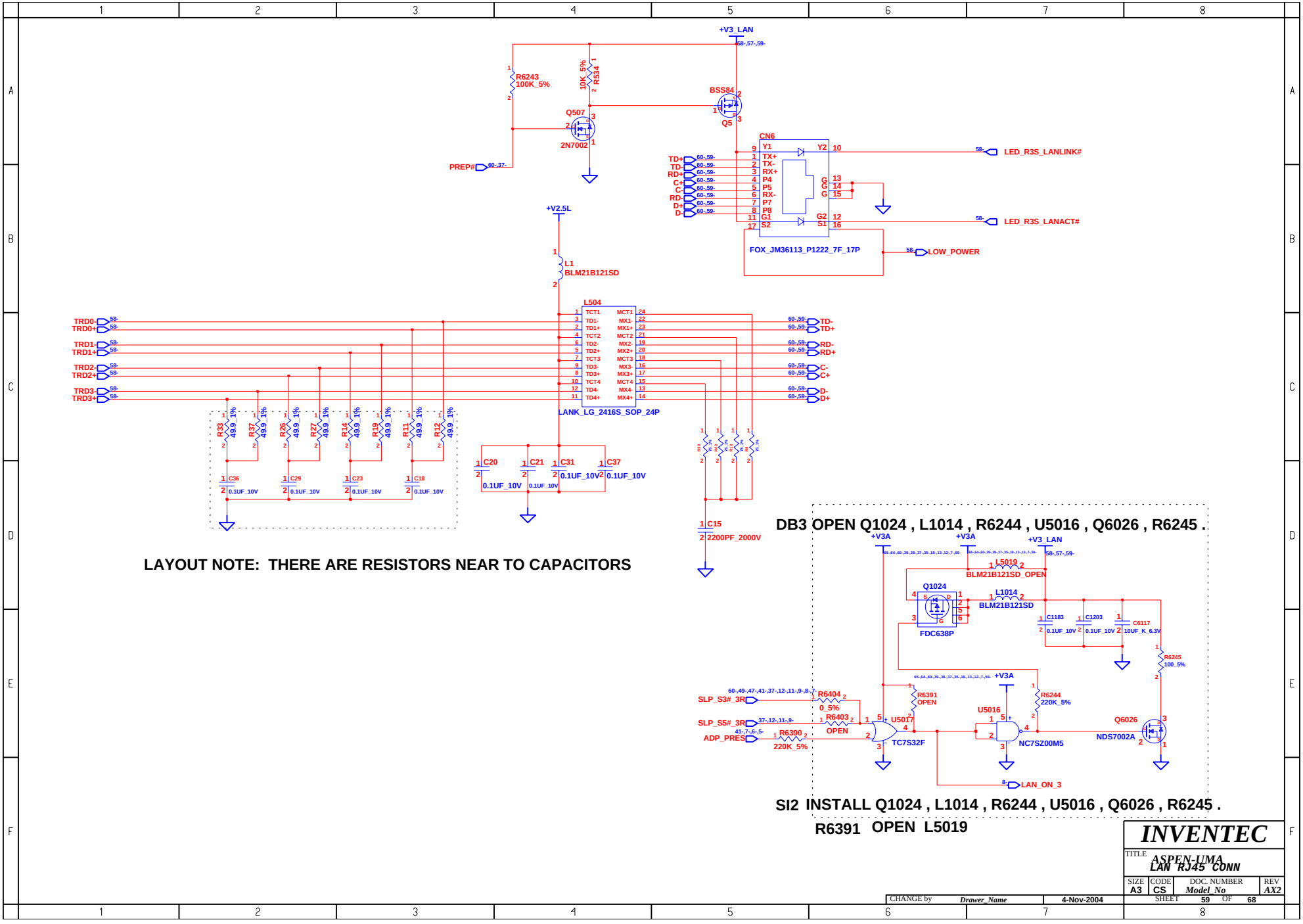

WWW.AliSaler.Com

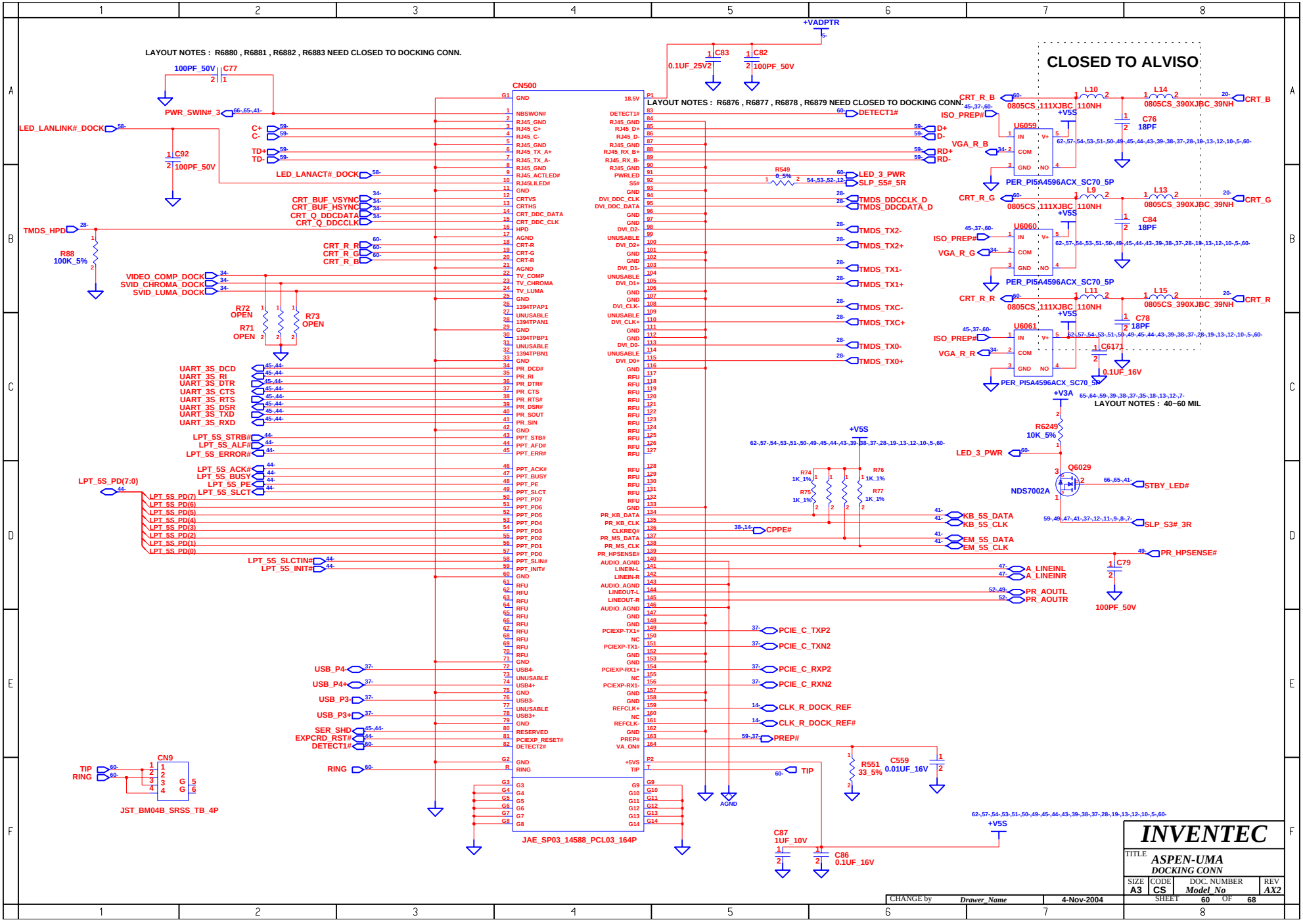

WWW.AliSaler.Com

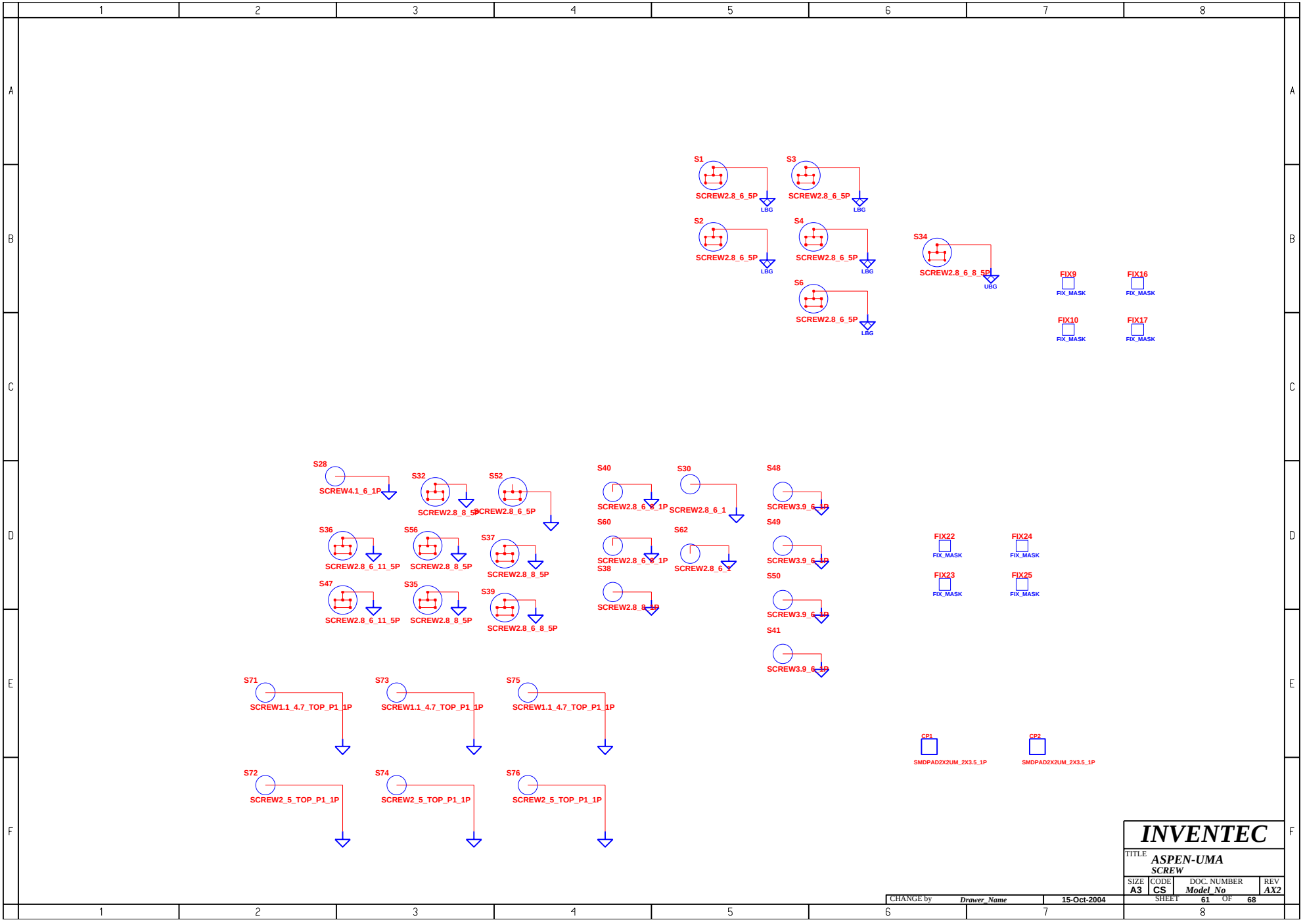

WWW.AliSaler.Com

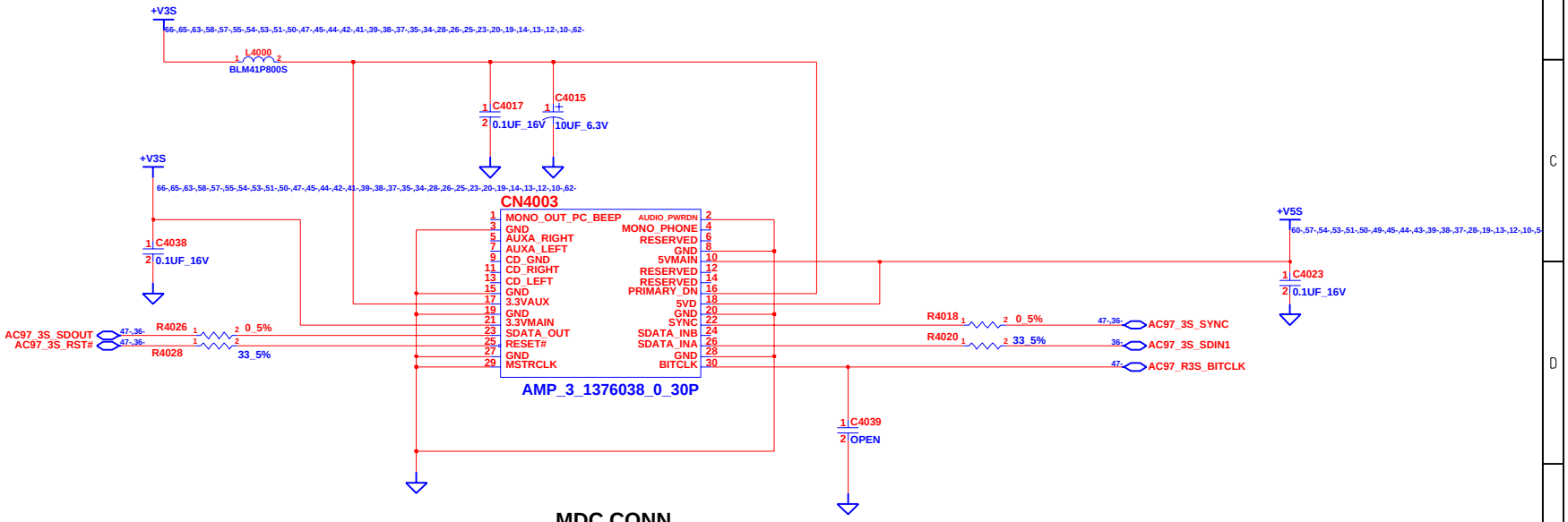

MDC CONN

INVENTEC			
TITLE ASPEN-UMA MDC CONN			
SIZE A3	CODE CS	DOC. NUMBER Model_No	REV AX2
CHANGE by Drawer_Name	1-Dec-2004	SHEET 62 OF 68	

WWW.AliSaler.Com

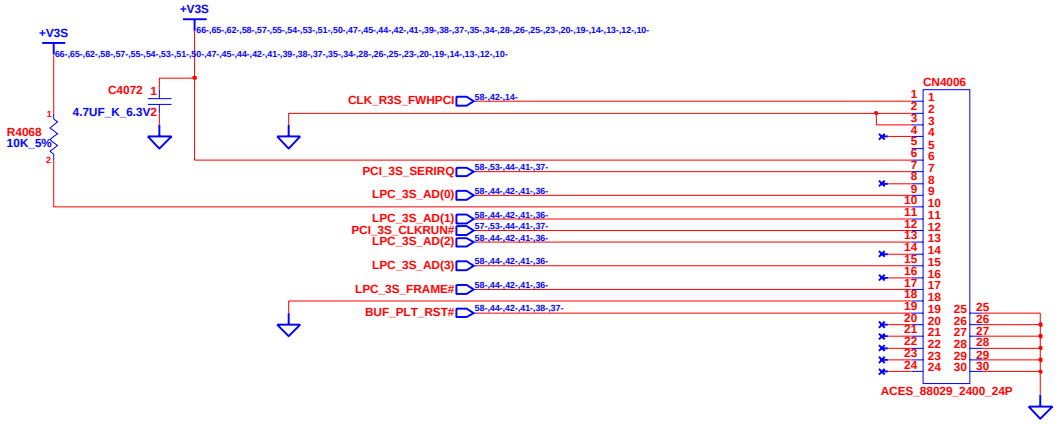

AMP 20PIN CONNECTOR
MOTHERBOARD SIDE
ACES_88029_2400

CHANGE by	Drawer_Name	30-Aug-2004	

INVENTEC

TITLE *ASPEN-UMA*
TCPA

SIZE	CODE	DOC. NUMBER	REV
A3	CS	Model_No	AX2

SHEET 63 OF 68

WWW.AliSaler.Com

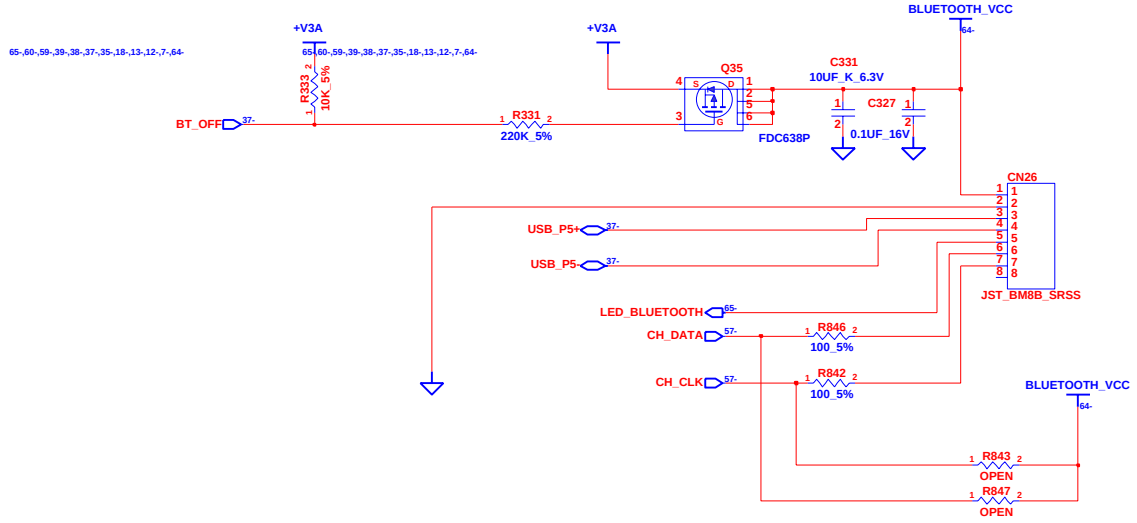

CHANGE by	Drawer_Name	30-Aug-2004	

INVENTEC

TITLE *ASPEN-UMA*
BLUETOOTH

SIZE	CODE	DOC. NUMBER	REV
A3	CS	Model_No	AX2

SHEET 64 OF 68

WWW.AliSaler.Com

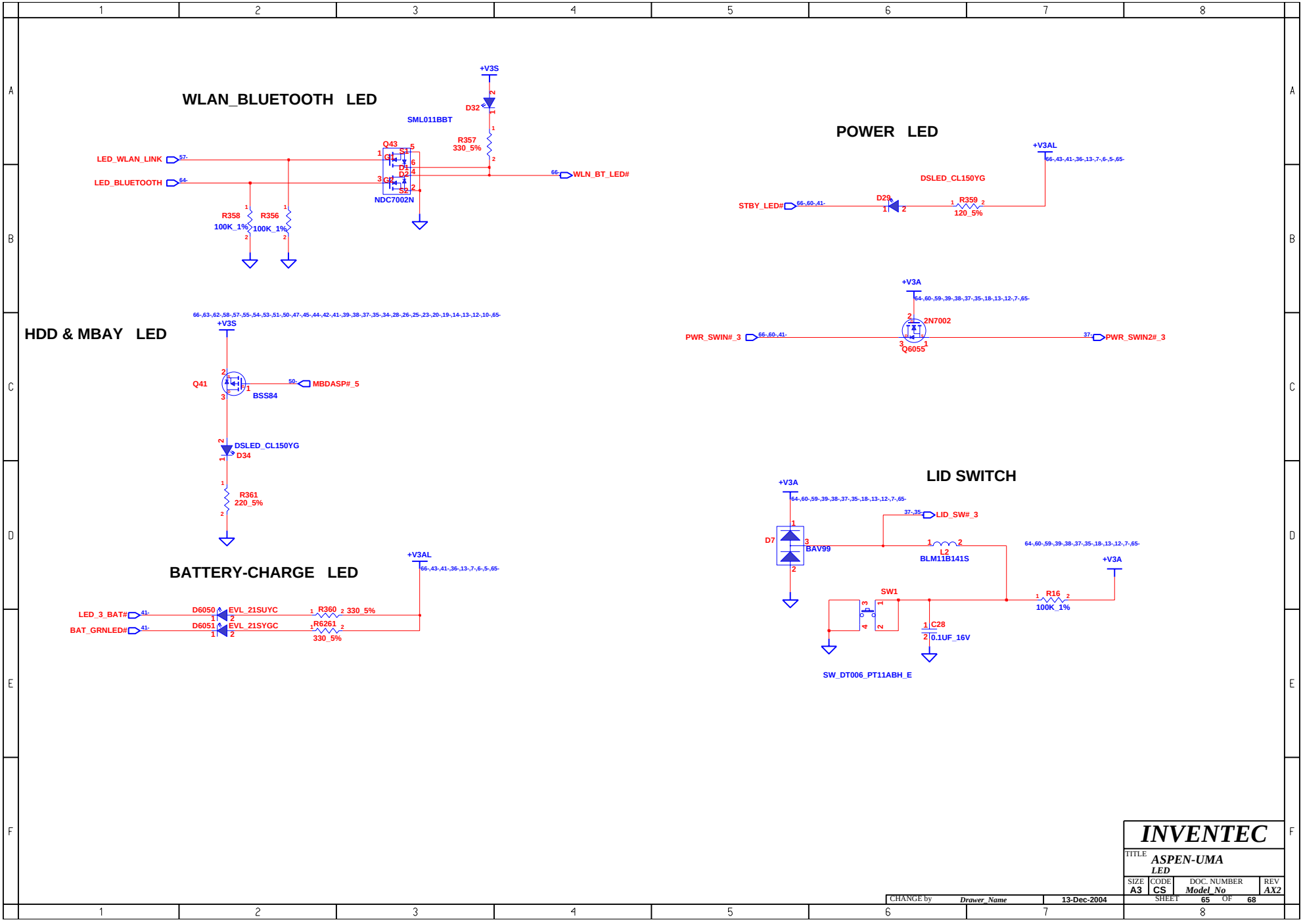

WWW.AliSaler.Com

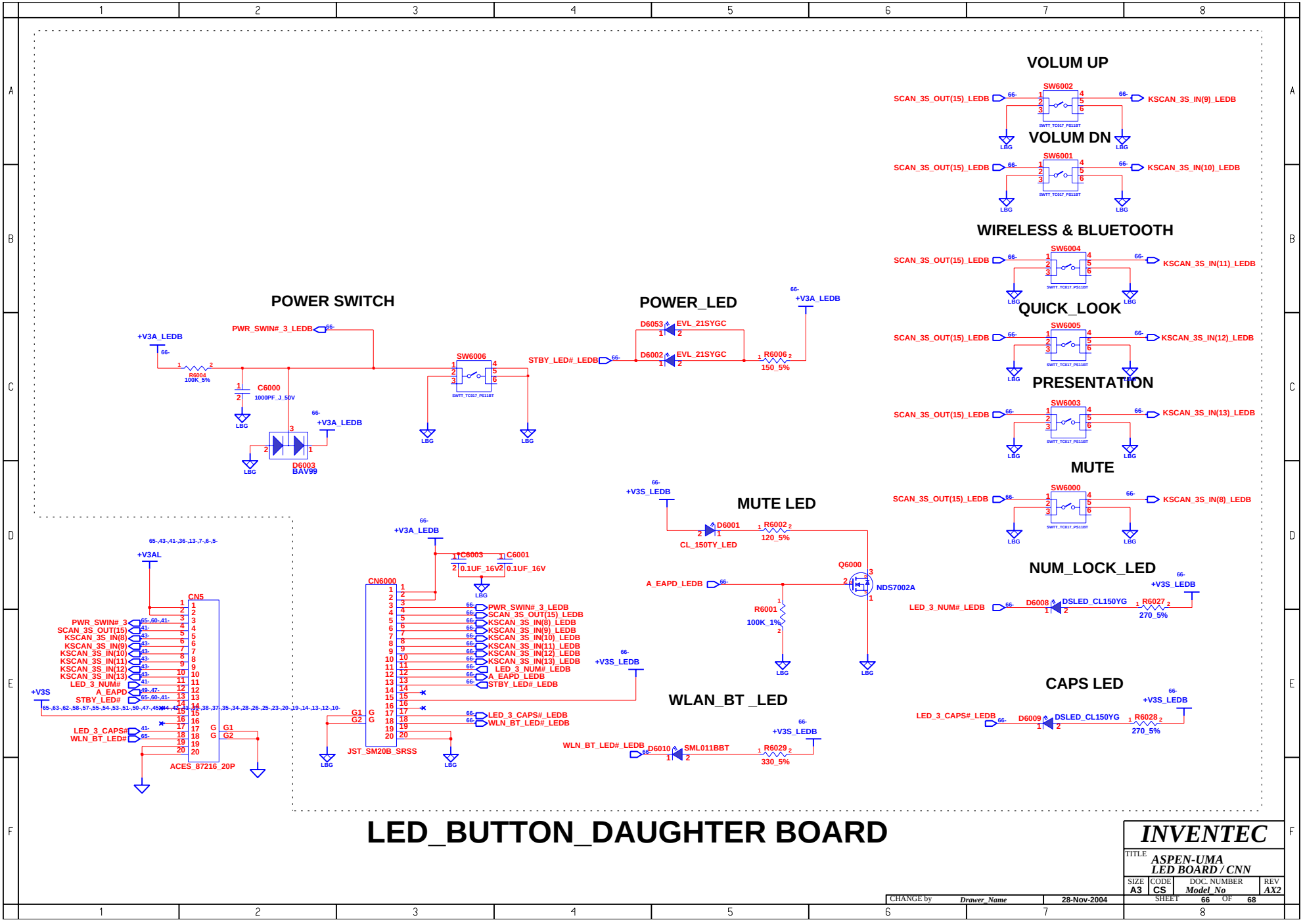

WWW.AliSaler.Com

LCD CABLE

1	
2	+V3S
3	
4	+V3S
5	
6	+V3S
7	
8	LCM_DDCPCLK
9	
10	LCM_DDCPDATA
11	LVDS_TXDL0-
12	LVDS_TXDL0+
13	LVDS_TXDL1-
14	LVDS_TXDL1+
15	LVDS_TXDL2-
16	LVDS_TXDL2+
17	LVDS_TXCL-
18	LVDS_TXCL+
19	GND
20	GND
21	LVDS_TXDU0-
22	LVDS_TXDU0+
23	LVDS_TXDU1-
24	LVDS_TXDU1+
25	LVDS_TXDU2-
26	LVDS_TXDU2+
27	LVDS_TXCU+
28	LVDS_TXCU-
29	GND
30	GND
31	
32	ALS_EN
33	+V5A
34	+V5A
35	+V5A
36	INV_PWM_3
37	+V3S
38	GND
39	GND
40	GND

MIC CABLE

1	INT_MIC_CN_DB
2	GND

SPEAKER CABLE

1	SPK_OUT_L-
2	SPK_OUT_L+
3	SPK_OUT_R-
4	SPK_OUT_R+

BLUETOOTH CABLE

1	BLUETOOTH_VCC
2	GND
3	GND
4	USB_P5+
5	USB_P5-
6	LED_BLUETOOTH
7	CH_DATA
8	CH_CLK

keyboard

1	
2	
3	
4	SCAN_3S_OUT(9)
5	KSCAN_3S_IN(9)
6	KSCAN_3S_IN(11)
7	KSCAN_3S_IN(13)
8	SCAN_3S_IN(7)
9	KSCAN_3S_IN(6)
10	KSCAN_3S_IN(5)
11	SCAN_3S_OUT(1)
12	SCAN_3S_OUT(10)
13	SCAN_3S_OUT(6)
14	SCAN_3S_OUT(7)
15	SCAN_3S_OUT(4)
16	SCAN_3S_OUT(8)
17	SCAN_3S_OUT(3)
18	KSCAN_3S_IN(3)
19	KSCAN_3S_IN(1)
20	KSCAN_3S_IN(2)
21	KSCAN_3S_IN(4)
22	KSCAN_3S_IN(0)
23	KSCAN_3S_IN(10)
24	KSCAN_3S_IN(12)
25	KSCAN_3S_IN(8)
26	KSCAN_3S_IN(14)
27	SCAN_3S_OUT(5)
28	SCAN_3S_OUT(2)
29	SCAN_3S_OUT(0)
30	SCAN_3S_OUT(11)

PATA&SATA

1	PCI_3S_RST#
2	GND
3	PIDE_3S_D(7)
4	PIDE_3S_D(8)
5	PIDE_3S_D(6)
6	PIDE_3S_D(9)
7	PIDE_3S_D(5)
8	PIDE_3S_D(10)
9	PIDE_3S_D(4)
10	PIDE_3S_D(11)
11	PIDE_3S_D(3)
12	PIDE_3S_D(12)
13	PIDE_3S_D(2)
14	PIDE_3S_D(13)
15	PIDE_3S_D(1)
16	PIDE_3S_D(14)
17	PIDE_3S_D(0)
18	PIDE_3S_D(15)
19	GND
20	
21	PIDE_3S_DREQ
22	GND
23	PIDE_3S_IOW#
24	GND
25	PIDE_3S_IOR#
26	GND
27	PIDE_3S_IORDY
28	GND
29	PIDE_3S_DACK#
30	GND
31	PIDE_3S_IRQ
32	GND
33	PIDE_3S_A(1)
34	GND
35	PIDE_3S_A(0)
36	PIDE_3S_A(2)
37	PIDE_3S_CS#(0)
38	PIDE_3S_CS#(1)
39	MBDASP#_5
40	+V5S
41	+V5S
42	+V5S
43	+V5S
44	SATA_C_TXP0
45	SATA_C_TXN0
46	+V3S
47	+V3S
48	+V3S
49	SATA_C_RXN0
50	SATA_C_RXP0

USB CABLE

1	+5A_USB
2	+5A_USB
3	+5A_USB
4	+5A_USB
5	USB_P1-
6	USB_P1+
7	USB_P0-
8	USB_P0+
9	GND
10	GND
11	GND
12	GND

AUDIO CABLE

1	PR_AOUTL_DB
2	AUDIO_VCC_DB
3	PR_AOUTR_DB
4	AUDIO_VREF_DB
5	A_HPL_DB
6	GND
7	A_HPR_DB
8	GND
9	A_MIC1_DB
10	GND
11	A_MIC2_DB
12	GND

SERIAL CABLE

1	
2	
3	RS232_R1IN
4	RS232_R2IN
5	RS232_R3IN
6	RS232_R4IN
7	RS232_R5IN
8	RS232_T1OUT
9	RS232_T2OUT
10	RS232_T3OUT
11	GND
12	GND

TOUCHPAD CABLE

1	+V5S
2	+V5S
3	IM_5S_DATA
4	IM_5S_CLK
5	GND
6	GND
7	
8	
9	
10	
11	
12	

POINT STICK

1	+V5S
2	
3	GND
4	
5	
6	
7	
8	

SW/B CABLE

1	+V3A
2	+V3A
3	PWR_SWIN#_3
4	SCAN_3S_OUT(15)
5	KSCAN_3S_IN(8)
6	KSCAN_3S_IN(9)
7	KSCAN_3S_IN(10)
8	KSCAN_3S_IN(11)
9	KSCAN_3S_IN(12)
10	KSCAN_3S_IN(13)
11	LED_3_NUM#
12	A_EAPD
13	LED_3_PWR#
14	STANDBY_SW#
15	SLP_S3_5R
16	QUICK_LOCK#
17	WLN_BT_LED#
18	GND
19	GND
20	GND

CHANGE by	Drawer_Name	30-Aug-2004	

INVENTEC

TITLE *ASPEN-UMA CABLE*

SIZE	CODE	DOC. NUMBER	REV
A3	CS	Model_No	AX2

SHEET 67 OF 68

WWW.AliSaler.Com

IEC / HP Aspen_UMA MV Schematic Changes

December 10, 2004

HP Confidential Information

Open Items

Item #	Project	Component / Subsection	PG. #	Description of Requested Change	Date Open+F7 / Closed	Requested By / Owner	Status / Aspen	Aspen FBK/Date
1	UMA	V2.5L	8	Improve the RGB signal waveform on CRT monitor R6247 from 909k change to 1M_1% 60130B10049T	2004/11/17	IEC	Open	sch1117 done
2	UMA	ALVISO	23	Improve the S-Video & RGB signal waveform for S-Video & RGB monitor. 1.L5014 pin 1 C6059 change to 47UF capacitor (OXi cap). 2.L5015 pin 1 C6063 change to 47UF capacitor (OXi cap.) 3.C216 change to 47UF capacitor (OXi cap.) 4.Remove C6068.	2004/11/29	IEC	Open	sch1129 done
3	UMA	Power	11	Change U6064 +V0.9 limit regulator circuit for DDR2. Remove R640 , C734 , C195 , C735 , C196 , C193 add C6176 1uf , C6172 , C6173 , C6174 , C6175 10uf.	2004/11/29	HP	Open	sch1129 done
4	UMA	LED	66	1.Add LED D6053 EVL_21SYGC for machine ID recommend. 2.Change D6002 to EVL_21SYGC.	2004/11/29	HP	Open	sch1129 done
5	UMA	Switch Board	66	Change switch Board trace from Top side & Bottom side to internal layer a surface used GND to Cover it this change for safty ESD recommend.	2004/11/29	IEC	Open	sch1129 done
6	UMA	serial Board	45	Change Serial Board trace from Top side & Bottom side to internal layer a surface used GND to cover it this change for Safty ESD recommend.	2004/11/29	IEC	Open	sch1129 done
7	UMA	Power	7	Move D6048 , C6162 , R6283 placement this change for machine recommend.	2004/11/29	IEC	Open	sch1129 done
8	UMA	ICH-6	37	Change C882,C883 from 10pF to 18pF for RTC accuracy	2004/11/29	IEC	Open	sch1129 done
9	UMA	ALVISO ICH-6	23 23 36	For EMI recommend: 1.Add C6188,C6189,C6190 0.01uF_16V connect +V1.5S for EMI improve +V1.5S power plane. 2.Add C6185,C6186,C6187 0.01uF_16V connect +V1.8 for EMI improve +V1.8 power plane 3.Add C6191 0.01uF_16V connect CN7 RTCBAT to improve EMI noise.	2004/12/2	IEC	Open	sch1202 done
10	UMA	Power	11	Add two power via 30_16 on +V0.9S power rail.	2004/12/3	IEC	open	sch1203 done
11	UMA	Power	13	Aspen UMA uses a 2.5V rail,R6150 should be changed to 107K_1%, and R6152 should be changed to 57.6K_1%.	2004/12/10	HP	open	sch1210 done